CITY OF SARATOGA SPRINGS
PLANNING BOARD
City Hall - 474 Broadway
Saratoga Springs, New York 12866
Tel: 518-587-3550 fax: 518-580-9480
www.saratoga-springs.org

MARK TORPEY, Chair
ROBERT F. BRISTOL, Vice-Chair
TOM L. LEWIS
CLIFFORD VAN WAGNER
HOWARD PINSLEY
JANET CASEY
JAMIN TOTINO
AMY DURLAND, Alternate
RUTH HORTON, Alternate

Planning Board Meeting
City Council Room – 7:00 PM

Agenda

Planning Board Meeting – Thursday, September 8, 2016

City Council Room – 7:00 PM

Workshop: Tuesday, September 6, 2016 At 5pm In The City Council Room

Salute To Flag

A. Applications Under Consideration

1. **15.004.3 Oak Ridge Phase 2 Subdivision**
   Meadowbrook Road, Residential conservation subdivision extension within the Rural Residential District.

   Documents:

   15.004.3 OAKRIDGESUBDIVISIONPH2_APP_REDACTED.PDF

2. **16.026 Allerdice Glass & Aluminum**
   120 Excelsior Avenue, Special use permit for manufacturing, retail, office and recreational facility within the Transect-5 (T-5) District.

   Documents:

   16.026 ALLERDICEGLASSANDALUMNIUM_COUNTYRESPONSE.PDF
   16.026 ALLERDICEGLASSANDALUMINUM_APP_REDACTED.PDF
   16.026 ALLERDICEGLASSANDALUMINUM_SITEPLANWAIVER_REDACTED.PDF

3. **16.027 West Avenue Apartments**
   246 West Ave, Special use permit for construction of 16 multi-family residential units within the Transect-4 Urban Neighborhood (T-4) District.

   Documents:

   16.027 WESTAVEAPTSSUP_FULLAPP_REDACTED.PDF

4. **16.028 West Ave Apartments**
   Site plan for construction of 16 multi-family residential units within the Transect-4 (T-4) District.

   Documents:

   16.028 WESTAVEAPTSSITEPLAN_FULLAPP_REDACTED.PDF

5. **16.031 Zumpano Subdivision**
   119 East Avenue, proposed final 2 lot subdivision within the Urban Residential-3 (UR-3) District.

   Documents:

   16.031 ZUMPANOSUBDIVISION_APP_REDACTED.PDF

6. **16.033 Interlaken PUD Proposed Amendment**
   Request for Advisory Opinion from the City Council.

   Documents:

   16.033 INTERLAKENZONINGAMEND_APP_REDACTED.PDF

B. Discussion: Spring Run Preserve Proposed Membership

Approval Of Minutes: July 28, 2016

Next Meeting: Thursday, September 22, 2016 (W/ Monday, September 19, 2016 Caravan & Workshop)

[FOR OFFICE USE]

(Application #)

(Date received)

CITY OF SARATOGA SPRINGS

PLANNING BOARD

City Hall - 474 Broadway
Saratoga Springs, New York 12866-2296
Tel: 518-587-3550 fax: 518-580-9480
http://www.saratoga-springs.org

(Rev: 12/2015)

APPLICATION FOR: APPROVAL EXTENSIONS – SPECIAL USE PERMIT, SITE PLAN, LAND DISTURBANCE ACTIVITY, SUBDIVISION

Project Name: Oak Ridge Subdivision, Phase 2

Property Address/Location: Meadowbrook Road

Date of original Planning Board approval: November 5, 2015

Current expiration date: August 5, 2016

- ☐ Special Use Permit approval – 18 month extension
- ☐ Site Plan approval – 18 month extension
- ☐ Land Disturbance Activity approval – 18 month extension
- ■ Subdivision approval – 90 day extension

Reason for Extension: Working on completing details of Conservation Easement.

Since the project was originally approved, are there any significant changes to the site or neighborhood or within the circumstances and findings of fact upon which the original approval was granted? ■ No ☐ Yes If Yes, please describe:

	APPLICANT(S)*	OWNER(S) *(If not applicant)*	ATTORNEY/AGENT
Name	Oak Ridge Development , LLC	Same	The LA Group, PC
Address	23 Dyer Switch Road Saratoga Springs, NY 12866		40 Long Alley Saratoga Springs, NY 12866
Phone	[redacted]		[redacted]
Email			

Identify primary contact person: ☐ Applicant ☐ Owner ■ Agent

* An applicant must be the property owner, lessee, or one with an option to lease or purchase the property in question.

Does any City officer, employee or family member thereof have a financial interest (as defined by General Municipal Law Section 809) in this application? ☐ No ■ Yes If Yes, a statement disclosing the name, residence, nature and extent of this interest must be filed with this application.

Please check the following to affirm information is included with submission:

■ 10 copies and one electronic copy (PDF) of complete application and any attachments.
■ Application Fee: A check for the total amount below payable to: "Commissioner of Finance" MUST accompany this application.

Special Use Permit approval extension
☐ $250
Site Plan approval extension
☐ Residential - $250
☐ Non-Residential - $500
Land Disturbance Activity approval extension
☐ $250
Subdivision approval extension
■ Residential - $100
☐ Non-Residential - $250

Submission Deadline - Applications must be submitted prior to approval expiration. Check City's website (www.saratoga-springs.org) for application deadlines and meeting dates.

I, the undersigned owner, leasee or purchaser under contract for the property, hereby request approval by the Planning Board for the aforementioned extension of the Site Plan approval.

Applicant Signature: J. S _____ Date: 6/21/16

If applicant is not currently the owner, the owner must also sign.

Owner Signature: _____ Date: _____

SARATOGA COUNTY PLANNING BOARD

TOM L. LEWIS
CHAIRMAN

JASON KEMPER
DIRECTOR

July 26, 2016

Kate Maynard, Principal Planner
City of Saratoga Springs
City Hall 474 Broadway
Saratoga Springs, NY 12866

SCPB Referral Review#16-141-Special Use Permit-Wallace Allerdice/Allerdice Glass & Aluminum

Special Use Permit for manufacturing/sales/ personal training studio within T-5 District.
Excelsior Avenue, off/parallel to NYS Route 50, east of Marion Avenue

Received from the City of Saratoga Springs Planning Board on July 8, 2016.

Reviewed by the Saratoga County Planning Board on July 21, 2016.

Decision: No Significant Countywide or Intercommunity Impact

Comment: The Saratoga County Planning Board recognizes no impact of a county nature in its review of the proposal to consider the existing use/business under a special use permit which was not required under the zoning criteria at the time of the original 1999 application for site plan review. We note a change in the property's designation to T-5 (Transect 5) in 2004 and the intent to include an existing user in the building other than the owner (and other defined uses) under the umbrella of the SUP.

Michael Valentine, Senior Planner
Authorized Agent for Saratoga County

DISCLAIMER: Recommendations made by the Saratoga County Planning Board on referrals and subdivisions are based upon the receipt and review of a "full statement of such proposed action" provided directly to SCPB by the municipal referring agency as stated under General Municipal Law section 239. A determination of action is rendered by the SCPB based upon the completeness and accuracy of information presented by its staff. The SCPB cannot be accountable for a decision rendered through incomplete or inaccurate information received as part of the complete statement.

50 WEST HIGH STREET
BALLSTON SPA, NY 12020

(518) 884-4705 PHONE
(518) 884-4780 FAX

the LA group
Landscape Architecture
and Engineering, P.C.

40 Long Alley
Saratoga Springs
New York 12866

P [redacted]
F
www.thelagroup.com

LETTER OF TRANSMITTAL

TO: Saratoga Springs Planning Office

DATE: 6/23/2016 JOB NO.: 201412

ATTENTION: Kate Maynard

RE: Allerdice Glass and Aluminum

WE ARE SENDING YOU ■ Attached ☐ Under separate cover via overnight mail the following items

☐ Shop drawings ☐ Prints ☐ Plans ☐ Samples ☐ Specifications
☐ Copy of letter ☐ Change order ☐ _____

COPIES	DATE	NO.	DESCRIPTION
3			Full size Special Use Permit Sketch Plan
3			Applications for Special Use Permit
3			Short EAF
1			Application fee check for $750
1			CD of Transmitted Materials

THESE ARE TRANSMITTED as checked below:

■ For approval ☐ Approved as submitted ☐ Resubmit_____copies for approval
☐ For your records ☐ Approved as noted ☐ Submit_____copies for distribution
☐ As requested ☐ Return for corrections ☐ Return _____corrected prints
☐ For review and comments ☐ _____
☐ FOR BIDS DUE _____20____ ☐ PRINTS RETURNED AFTER LOAN TO US

REMARKS:
The submission is for Special Use Permit for placement on the December 7th planning board agenda. If there are any questions please contact us.

Cc. Jay Hopeck, file

SIGNED: _____
David Carr

If enclosures are not as noted, kindly notify us at once.

the LA group
Landscape Architecture
and Engineering, P.C.

40 Long Alley
Saratoga Springs
New York 12866

P [redacted]
F
www.thelagroup.com

June 23, 2016

Mr. Mark Torpey - Chair
Saratoga Springs Planning Board
City Hall – 474 Broadway
Saratoga Springs, NY 12866

Re: Special Use Permit Application
Allerdice Glass & Aluminum
Saratoga Springs, NY

Dear Mr. Torpey,

Please accept the attached application for a Special Use Permit for the existing Allerdice Glass & Aluminum site. The Planning Board originally granted Site Plan approval on May 5, 1999. A building addition was approved with a site plan amendment on October 3, 2001. Additional expansions were approved in 2004 and 2008 although the last expansion was not constructed.

The original zoning for the property was Inner Excelsior Avenue District (IEAD) which was changed to Transect – 5 (T-5) in 2004. A special use permit was not required under the original zoning but is required in the T-5 Zone. Therefore, a Special Use permit does not exist for this property.

We are seeking a special use permit for the existing Glass & Aluminum business, and a personal training facility.

If you have any questions, please let me know and I would be happy to furnish additional information.

Sincerely,

David Carr, Jr, RLA
for
The LA Group, P.C.

enclosures

cc:

CITY OF SARATOGA SPRINGS

PLANNING BOARD

City Hall - 474 Broadway
Saratoga Springs, New York 12866-2296
Tel: 518-587-3550 fax: 518-580-9480
http://www.saratoga-springs.org

[FOR OFFICE USE]

(Application #)

(Date received)

APPLICATION FOR: SPECIAL USE PERMIT

(Rev: 05/2016)

Project Name: Allerdice Glass & Aluminum

Property Address/Location: 120 Excelsior Avenue

Tax Parcel #: 166-4-3.1 (for example: 165.52-4-37) Zoning District: T-5, Neighborhood Center

Proposed Use: Window and Door Manufacturing/Sales/Personal Training Studio

Type of Special Use Permit: ☑ Permanent ☐ Temporary ☐ Renewable

	APPLICANT(S)*	OWNER(S) (If not applicant)	ATTORNEY/AGENT
Name	Wallace Allerdice		Dave Carr, RLA
Address	[redacted]		The LA Group, PC
			40 Long Alley
Phone			[redacted]
Email			

Identify primary contact person: ☐ Applicant ☐ Owner ☑ Agent

* An applicant must be the property owner, lessee, or one with an option to lease or purchase the property in question.

Please check the following to affirm information is included with submission.

☑ Sketch Plan Attached:
Applicant is encouraged to submit sketch plans showing features of the site and /or neighborhood and illustrate proposed use.

☑ Environmental Assessment Form:
All applications must include a completed SEQR Short or Long Form. SEQR Forms can be completed at http://www.dec.ny.gov/permits/6191.html.

☐ Water Service Connection Agreement- For all projects including new water connections to the City system, a copy of a signed water service connection fee agreement with the City Department of Public Works is required and MUST be submitted with this application.

☑ Application Fee: $750.00 (check box)
A check for the total amount made payable to: "Commissioner of Finance" MUST accompany this application.

☑ 3 hard copies (*1 signed original) and one electronic copy (PDF) of complete application and ALL attachments.

Submission Deadline - Check City's website (www.saratoga-springs.org) for application deadlines and meeting dates.

Does any City officer, employee or family member thereof have a financial interest (as defined by General Municipal Law Section 809) in this application? YES ☐ NO ☑. If YES, a statement disclosing the name, residence, nature and extent of this interest must be filed with this application.

I, the undersigned owner, leasee or purchaser under contract for the property, hereby request Special Use Permit approval by the Planning Board for the identified property above. I agree to meet all requirements under Section 240-7.1 of the Zoning Code of the City of Saratoga Springs.

Furthermore, I hereby authorize members of the Planning Board and designated City staff to enter the property associated with this application for purposes of conducting any necessary site inspections relating to this application.

Applicant Signature: _____ Date: 6/21/2016

If applicant is not current owner, owner must also sign.

Owner Signature: _____ Date: _____

617.20
Appendix B
Short Environmental Assessment Form

Instructions for Completing

Part 1 - Project Information. The applicant or project sponsor is responsible for the completion of Part 1. Responses become part of the application for approval or funding, are subject to public review, and may be subject to further verification. Complete Part 1 based on information currently available. If additional research or investigation would be needed to fully respond to any item, please answer as thoroughly as possible based on current information.

Complete all items in Part 1. You may also provide any additional information which you believe will be needed by or useful to the lead agency; attach additional pages as necessary to supplement any item.

Part 1 - Project and Sponsor Information

Name of Action or Project:
Allerdice Glass & Aluminum Special Use Permit

Project Location (describe, and attach a location map):
120 Excelsior Avenue

Brief Description of Proposed Action:
The proposed action includes application for a special Use permit fpr an existing glass an aluminum sales and manufacturing facity and a personal training studio.

Name of Applicant or Sponsor:	Telephone: [redacted]
Wallace Allerdice	E-Mail: [redacted]

Address: [redacted]

City/PO:	State:	Zip Code:
[redacted]	[redacted]	[redacted]

	NO	YES
1. Does the proposed action only involve the legislative adoption of a plan, local law, ordinance, administrative rule, or regulation? If Yes, attach a narrative description of the intent of the proposed action and the environmental resources that may be affected in the municipality and proceed to Part 2. If no, continue to question 2.	☑	☐
2. Does the proposed action require a permit, approval or funding from any other governmental Agency? If Yes, list agency(s) name and permit or approval:	☑	☐

3.a. Total acreage of the site of the proposed action? 3.0 acres
b. Total acreage to be physically disturbed? 0.0 acres
c. Total acreage (project site and any contiguous properties) owned or controlled by the applicant or project sponsor? 9.6 acres

4. Check all land uses that occur on, adjoining and near the proposed action.
☐ Urban ☐ Rural (non-agriculture) ☑ Industrial ☑ Commercial ☑ Residential (suburban)
☐ Forest ☐ Agriculture ☐ Aquatic ☐ Other (specify): _____
☐ Parkland

RESET

	NO	YES	N/A
5. Is the proposed action,			
a. A permitted use under the zoning regulations?	☐	☑	☐
b. Consistent with the adopted comprehensive plan?	☐	☑	☐

	NO	YES
6. Is the proposed action consistent with the predominant character of the existing built or natural landscape?	☐	☑

	NO	YES
7. Is the site of the proposed action located in, or does it adjoin, a state listed Critical Environmental Area?		
If Yes, identify: _____	☑	☐

	NO	YES
8. a. Will the proposed action result in a substantial increase in traffic above present levels?	☑	☐
b. Are public transportation service(s) available at or near the site of the proposed action?	☐	☑
c. Are any pedestrian accommodations or bicycle routes available on or near site of the proposed action?	☐	☑

	NO	YES
9. Does the proposed action meet or exceed the state energy code requirements?		
If the proposed action will exceed requirements, describe design features and technologies: _____	☑	☐

	NO	YES
10. Will the proposed action connect to an existing public/private water supply?		
If No, describe method for providing potable water: _____	☐	☑

	NO	YES
11. Will the proposed action connect to existing wastewater utilities?		
If No, describe method for providing wastewater treatment: _____	☐	☑

	NO	YES
12. a. Does the site contain a structure that is listed on either the State or National Register of Historic Places?	☑	☐
b. Is the proposed action located in an archeological sensitive area?	☐	☑

	NO	YES
13. a. Does any portion of the site of the proposed action, or lands adjoining the proposed action, contain wetlands or other waterbodies regulated by a federal, state or local agency?	☐	☑
b. Would the proposed action physically alter, or encroach into, any existing wetland or waterbody?	☑	☐
If Yes, identify the wetland or waterbody and extent of alterations in square feet or acres: _____		

14. Identify the typical habitat types that occur on, or are likely to be found on the project site. Check all that apply:

☐ Shoreline ☑ Forest ☐ Agricultural/grasslands ☐ Early mid-successional
☑ Wetland ☐ Urban ☑ Suburban

	NO	YES
15. Does the site of the proposed action contain any species of animal, or associated habitats, listed by the State or Federal government as threatened or endangered?	☑	☐

	NO	YES
16. Is the project site located in the 100 year flood plain?	☐	☑

	NO	YES
17. Will the proposed action create storm water discharge, either from point or non-point sources?		
If Yes,		
a. Will storm water discharges flow to adjacent properties? ☑ NO ☐ YES	☑	☐
b. Will storm water discharges be directed to established conveyance systems (runoff and storm drains)? ☐ NO ☑ YES		
If Yes, briefly describe: _____		

RESET

	NO	YES
18. Does the proposed action include construction or other activities that result in the impoundment of water or other liquids (e.g. retention pond, waste lagoon, dam)? If Yes, explain purpose and size: A retention pond exists on-site which was constructed as part of the original site plan approval.	☐	☑
19. Has the site of the proposed action or an adjoining property been the location of an active or closed solid waste management facility? If Yes, describe:	☑	☐
20. Has the site of the proposed action or an adjoining property been the subject of remediation (ongoing or completed) for hazardous waste? If Yes, describe: National Grid Coal Tar Remediation.	☐	☑

I AFFIRM THAT THE INFORMATION PROVIDED ABOVE IS TRUE AND ACCURATE TO THE BEST OF MY KNOWLEDGE

Applicant/sponsor name: Wallace Allerdice Date: 6/21/2016

Signature: Wallace Allerdice

Part 2 - Impact Assessment. The Lead Agency is responsible for the completion of Part 2. Answer all of the following questions in Part 2 using the information contained in Part 1 and other materials submitted by the project sponsor or otherwise available to the reviewer. When answering the questions the reviewer should be guided by the concept "Have my responses been reasonable considering the scale and context of the proposed action?"

	No, or small impact may occur	Moderate to large impact may occur
1. Will the proposed action create a material conflict with an adopted land use plan or zoning regulations?	☐	☐
2. Will the proposed action result in a change in the use or intensity of use of land?	☐	☐
3. Will the proposed action impair the character or quality of the existing community?	☐	☐
4. Will the proposed action have an impact on the environmental characteristics that caused the establishment of a Critical Environmental Area (CEA)?	☐	☐
5. Will the proposed action result in an adverse change in the existing level of traffic or affect existing infrastructure for mass transit, biking or walkway?	☐	☐
6. Will the proposed action cause an increase in the use of energy and it fails to incorporate reasonably available energy conservation or renewable energy opportunities?	☐	☐
7. Will the proposed action impact existing: a. public / private water supplies?	☐	☐
b. public / private wastewater treatment utilities?	☐	☐
8. Will the proposed action impair the character or quality of important historic, archaeological, architectural or aesthetic resources?	☐	☐
9. Will the proposed action result in an adverse change to natural resources (e.g., wetlands, waterbodies, groundwater, air quality, flora and fauna)?	☐	☐

RESET

	No, or small impact may occur	Moderate to large impact may occur
10. Will the proposed action result in an increase in the potential for erosion, flooding or drainage problems?	☐	☐
11. Will the proposed action create a hazard to environmental resources or human health?	☐	☐

Part 3 - Determination of significance. The Lead Agency is responsible for the completion of Part 3. For every question in Part 2 that was answered "moderate to large impact may occur", or if there is a need to explain why a particular element of the proposed action may or will not result in a significant adverse environmental impact, please complete Part 3. Part 3 should, in sufficient detail, identify the impact, including any measures or design elements that have been included by the project sponsor to avoid or reduce impacts. Part 3 should also explain how the lead agency determined that the impact may or will not be significant. Each potential impact should be assessed considering its setting, probability of occurring, duration, irreversibility, geographic scope and magnitude. Also consider the potential for short-term, long-term and cumulative impacts.

☐ Check this box if you have determined, based on the information and analysis above, and any supporting documentation, that the proposed action may result in one or more potentially large or significant adverse impacts and an environmental impact statement is required.

☐ Check this box if you have determined, based on the information and analysis above, and any supporting documentation, that the proposed action will not result in any significant adverse environmental impacts.

Name of Lead Agency	Date
Print or Type Name of Responsible Officer in Lead Agency	Title of Responsible Officer
Signature of Responsible Officer in Lead Agency	Signature of Preparer (if different from Responsible Officer)

PRINT

RESET

Vicinity Map:

SCALE: 1" = 300'

Site Statistics:

Parcel Size	3.0 Acres
Tax Map No.	166-4-3.1 (Inside District)
Existing Zoning	T-5, Neighborhood Center

Proposed Uses:

Proposed Uses	Maximum SF	Existing SF	Parking Requirements
Retail	5,000 SF	1,000 SF	1 /300 SF; 1 /2 Employees
Office (Including Real Estate Office)	10,000 SF	2,450 SF	1 /300 SF
Recreational Facility	5,000 SF	2,650 SF	1 /5 Seats
Manufacturing & Assembly	20,000 SF		1 /2 Employees + 1 Company Vehicle
Warehouse	20,000 SF	13,525 SF	1 /2 Employees + 1 Company Vehicle

Proposed Accessory Uses:

Proposed Uses	Maximum SF
Outdoor Display/Storage	1,500 SF

Parking Statistics:

Existing Facility	Square Footage	Parking Requirements
Office (1 per 300 SF required)	2,450 SF	8 spaces
Showroom (1 per 300 SF required)	1,000 SF	3 spaces
Warehouse (1 per company vehicle required)	13,525 SF	6 spaces (6 company vehicles)
(1 per 2 employees required)		9 spaces (18 employees)
Personal Training Studio (no use/activity category)	2,650 SF	4 spaces
	19,625 SF	
Required Parking		30 spaces
Existing Parking		24 spaces outside
		7 spaces inside
		31 spaces available
Possible Future Parking		14 spaces (If required with future site plan)

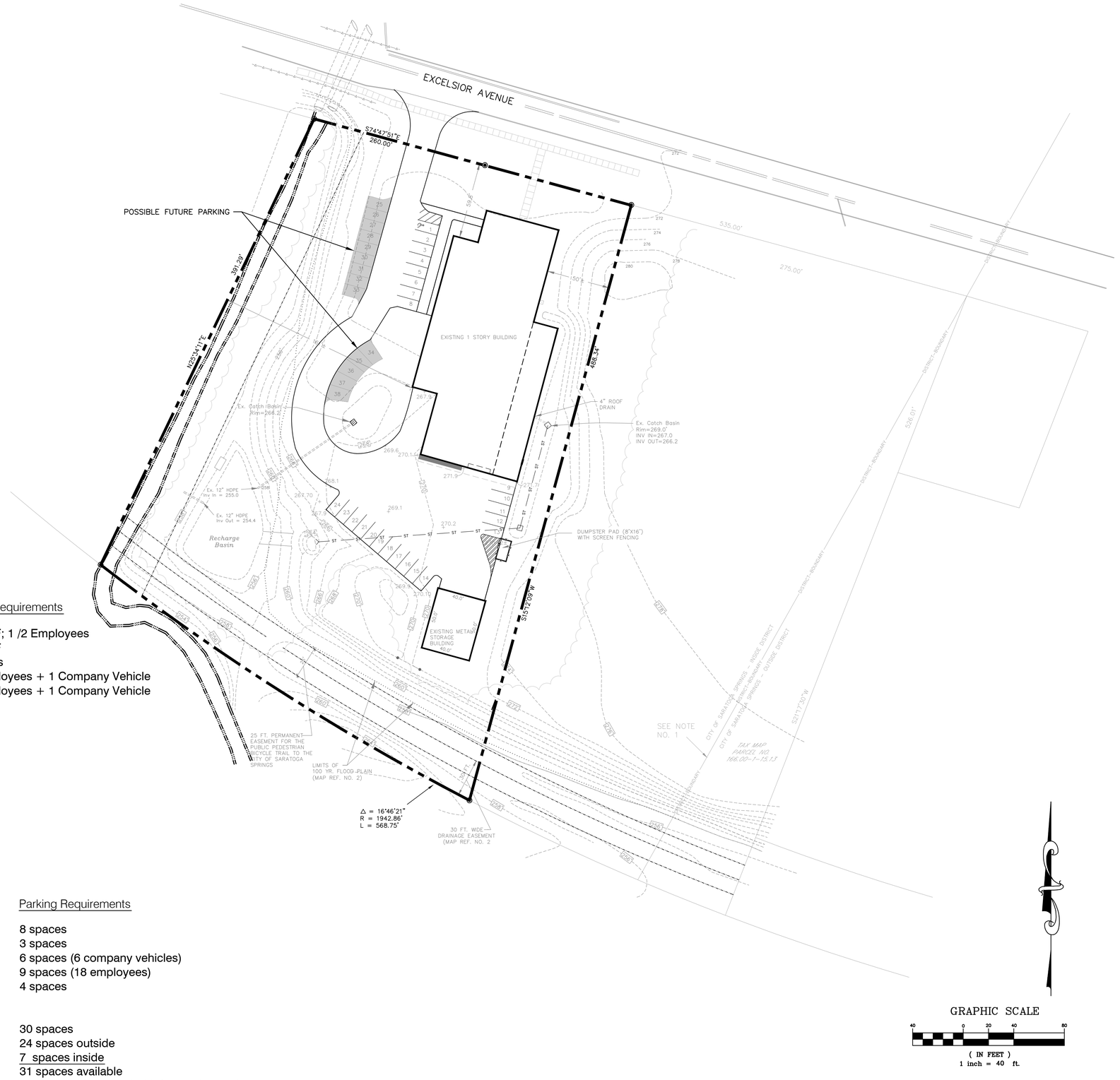

the LA group
Landscape Architecture and Engineering, P.C.
40 Long Alley
Saratoga Springs
New York 12866
518/587-8100
Telefax 518/587-0180

Unauthorized alteration or addition to this document is a violation of Section 7209 of the New York State Education Law.
© the LA Group 2007

Design DRC
Drawn KMK
Checked DRC

PREPARED FOR:
Wallace Allerdice
150 Excelsior Ave.
Saratoga Springs, N.Y. 12866

ALLERDICE GLASS & ALUMINUM
120 Excelsior Ave.
Saratoga Springs, N.Y.
Title Sketch Plan

Revisions
3/12/2014
4/07/2014
6/20/2016

Project 201412
Date 10/21/14
CAD # 201412base

Drawing
1 of 1

The LA GROUP
Landscape Architecture & Engineering P.C.
People. Purpose. Place.
40 Long Alley
Saratoga Springs
NY 12866
[redacted]
www.thelagroup.com

August 23, 2016

Mr. Mark Torpey, Chairman
City of Saratoga Springs Planning Board
City Hall
Saratoga Springs, NY 12866

Re: Allerdice Glass & Aluminum
Special Use Permit/Site Plan Approval

Dear Mr. Torpey,

The applicant submitted an application for Special Use Permit approval on June 23, 2016. While appearing at the Planning Boards July 25th workshop and through subsequent conversations with the City Planner, we learned that the project was also subject to Site Plan approval.

According to Section 7.2.2, B, 1, "Site Plan Review Applicability and Exemptions" of Chapter 240, the City of Saratoga Springs Zoning Ordinance; the proposal is not exempt from Site Plan review because the establishment of a Special Use Permit will require an increase in the number of required parking spaces. When the project was last approved in 2004, the required number of parking spaces was seven; however 24 outside spaces were approved due to the requirements of the use. The current uses require 30 spaces and 31 spaces are located on the site and within the existing building.

Since no additional parking needs to be constructed with this application, we are requesting the required Site Plan application be waived.

We look forward to presenting the revised plans to the Planning Board.

Sincerely,

David Carr Jr, RLA
Associate Principal
For
The LA Group, P.C.

G:\Proj-2013\201391_Prime_Excelsior_Expansion\201391Admin\01Correspondence\2.2Letters\2014_10_08 Coverletter.docx

CITY OF SARATOGA SPRINGS

PLANNING BOARD

City Hall - 474 Broadway
Saratoga Springs, New York 12866-2296
Tel: 518-587-3550 fax: 518-580-9480
http://www.saratoga-springs.org

[FOR OFFICE USE]

_____
(Application #)

_____
(Date received)

APPLICATION FOR: SPECIAL USE PERMIT

(Rev: 05/2016)

Project Name: 246 West Ave. Apartments

Property Address/Location: 246 West Avenue

Tax Parcel #: 178.33-1-20&21 Zoning District: T-4 Urban Neighbohood
(for example: 165.52-4-37)

Proposed Use: 16 residential units

Type of Special Use Permit: ☑ Permanent ☐ Temporary ☐ Renewable

	APPLICANT(S)*	OWNER(S) *(If not applicant)*	ATTORNEY/AGENT
Name	John-Paul Builders, LLC	246 West Avenue, INC.	The LA Group
Address	796 Burdeck Street	84 Everett Road Albany, NY 12205	40 Long Alley
Pho	[redacted]		[redacted]
Ema	[redacted]		

Identify primary contact person: ☐ Applicant ☐ Owner ☑ Agent

* An applicant must be the property owner, lessee, or one with an option to lease or purchase the property in question.

Please check the following to affirm information is included with submission.

☑ Sketch Plan Attached:
Applicant is encouraged to submit sketch plans showing features of the site and /or neighborhood and illustrate proposed use.

☑ Environmental Assessment Form:
All applications must include a completed SEQR Short or Long Form. SEQR Forms can be completed at http://www.dec.ny.gov/permits/6191.html.

☑ Water Service Connection Agreement- For all projects including new water connections to the City system, a copy of a signed water service connection fee agreement with the City Department of Public Works is required and MUST be submitted with this application.

☑ Application Fee: $750.00 (check box)
A check for the total amount made payable to: "Commissioner of Finance" MUST accompany this application.

☐ 3 hard copies (*1 signed original) and one electronic copy (PDF) of complete application and ALL attachments.

Submission Deadline - Check City's website (www.saratoga-springs.org) for application deadlines and meeting dates.

Does any City officer, employee or family member thereof have a financial interest (as defined by General Municipal Law Section 809) in this application? YES ☐ NO ☑. If YES, a statement disclosing the name, residence, nature and extent of this interest must be filed with this application.

I, the undersigned owner, leasee or purchaser under contract for the property, hereby request Special Use Permit approval by the Planning Board for the identified property above. I agree to meet all requirements under Section 240-7.1 of the Zoning Code of the City of Saratoga Springs.

Furthermore, I hereby authorize members of the Planning Board and designated City staff to enter the property associated with this application for purposes of conducting any necessary site inspections relating to this application.

Applicant Signature: _____ Date: _____

If applicant is not current owner, owner must also sign.

Owner Signature: _____ Date: _____

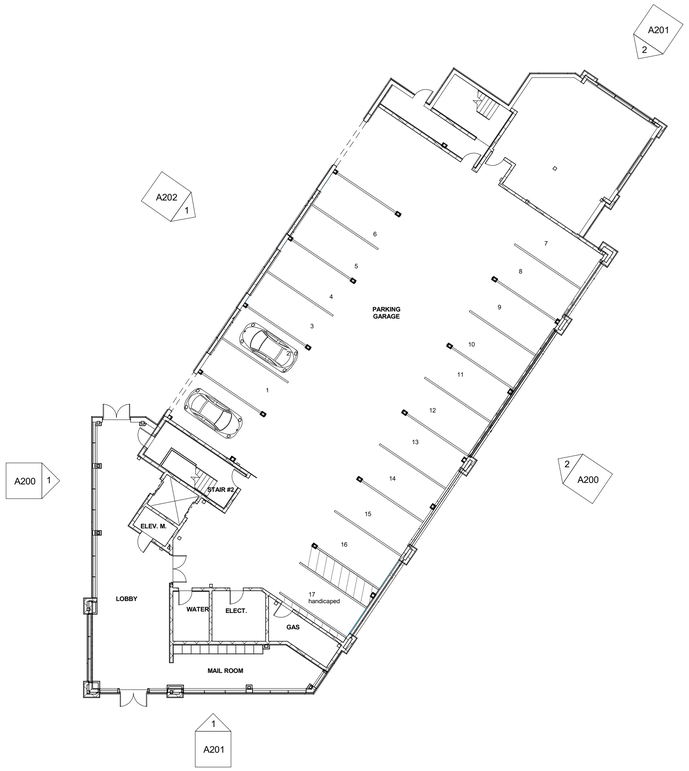

1 Level 1 (GROUND LEVEL PARKING)
1/16" = 1'-0"

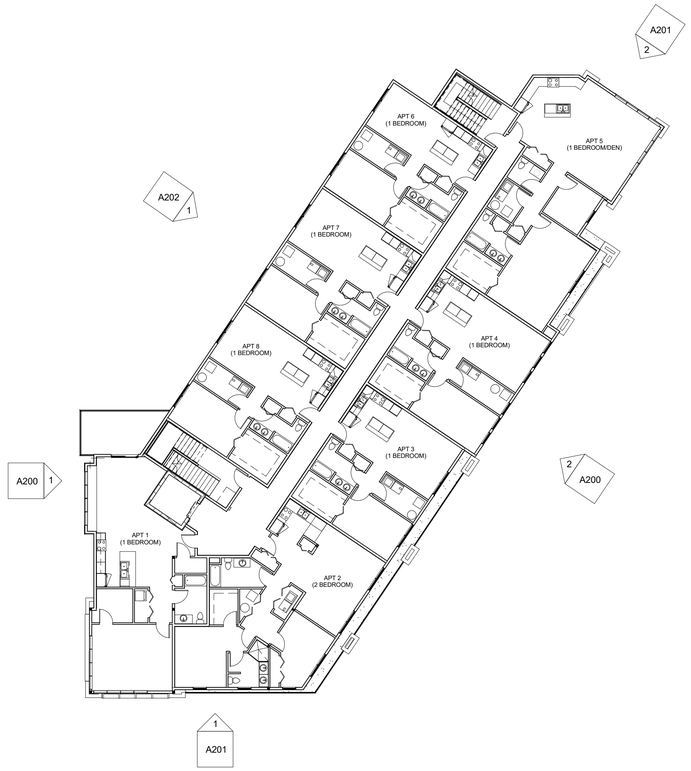

2 LEVEL 2
1/16" = 1'-0"

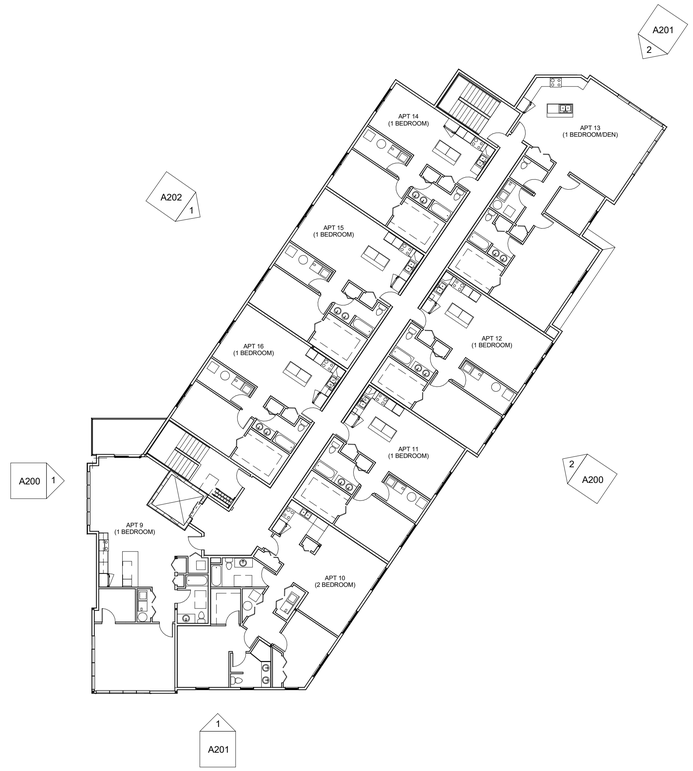

3 LEVEL 3
1/16" = 1'-0"

6/22/16

RE4ORM ARCHITECTURE
323 CLINTON STREET
SCHENECTADY, NY 12305
P:518.399.4174
F:518.399.4105
WWW.RE4ORMARCHITECTURE.COM

246 WEST AVE APARTMENTS

246 WEST AVE
SARATOGA SPRINGS, NY

FLOOR PLANS

A100

CONTRACTOR SHALL VERIFY ALL DIMENSION AT SITE. UNAUTHORIZED ALTERATIONS OR
ADDITIONS TO THIS DOCUMENT IS A VIOLATION OF THE NEW YORK STATE EDUCATION LAW.

1 NORTH ELEVATION
1/8" = 1'-0"

ELEVATION NOTES	
LABEL	ELEVATION NOTE
E01	"SMARTSIDE" ENGINEERED WOOD LAP SIDING FACTORY FINISHED COLOR TBD
E02	
E03	"SMARTSIDE" ENGINEERED WOOD TRIM FASCIA BOARDS & VENTED SOFFIT FACTORY FINISHED COLOR TBD
E04	"SMARTSIDE" ENGINEERED WOOD TRIM CORNER BOARDS FACTORY FINISHED COLOR TBD
E05	CULTURED STONE SILL
E06	CULTURED STONE VENEER TBD
E07	DECORATIVE HEAVY TIMBER BRACKETS, PAINTED COLOR TBD
E08	"SMARTSIDE" ENGINEERED WOOD SHAKE SIDING FACTORY FINISHED COLOR TBD
E09	COLUMNS WRAPED WITH "SMARTSIDE" ENGINEERED WOOD TRIM BORADS FACTORY FINISHED COLOR TBD
E10	FYPON OR EQUAL DECORATIVE ROUND LOUVER & TRIM
E11	DECORATIVE TRUSS & TRIM PAINTED COLOR TBD
E12	CULTURED STONE VENEER PIER WITH CONCRETE CAP
E13	STANDING SEAM METAL ROOF, COLOR TBD
E14	"MIRATEC" AND "EXTIRA" COMPOSITE BOARDS (PANEL & TRIMS) PAINTED, COLOR TBD
E15	"SMARTSIDE" ENGINEERED WOOD TRIM BOARDS FACTORY FINISHED COLOR TBD
E16	CUPOLA (CONTRACTORS OPTION TO BUILD IN PLACE OR INSTALL PREMENUACTURED UNIT)
E17	CABLE PIPE RAIL WITH PAINTED POSTS COLOR TBD
E18	ROOF CANOPY WITH ASPHALT SHINGLES AND "SMARTSIDE" FASCIA BOARDS & SOFFITS

2 SOUTH (BIKE PATH) ELEVATION
1/8" = 1'-0"

6/22/16

RE4ORM ARCHITECTURE
323 CLINTON STREET
SCHENECTADY, NY 12305
P:518.399.4174
F:518.399.4105
WWW.RE4ORMARCHITECTURE.COM

246 WEST AVE APARTMENTS

246 WEST AVE
SARATOGA SPRINGS, NY

EXTERIOR ELEVATIONS

A200

CONTRACTOR SHALL VERIFY ALL DIMENSION AT SITE. UNAUTHORIZED ALTERATIONS OR ADDITIONS TO THIS DOCUMENT IS A VIOLATION OF THE NEW YORK STATE EDUCATION LAW.

ELEVATION NOTES	
LABEL	ELEVATION NOTE
E01	"SMARTSIDE" ENGINEERED WOOD LAP SIDING FACTORY FINISHED COLOR TBD
E02	
E03	"SMARTSIDE" ENGINEERED WOOD TRIM FASCIA BOARDS & VENTED SOFFIT FACTORY FINISHED COLOR TBD
E04	"SMARTSIDE" ENGINEERED WOOD TRIM CORNER BOARDS FACTORY FINISHED COLOR TBD
E05	CULTURED STONE SILL
E06	CULTURED STONE VENEER TBD
E07	DECORATIVE HEAVY TIMBER BRACKETS, PAINTED COLOR TBD
E08	"SMARTSIDE" ENGINEERED WOOD SHAKE SIDING FACTORY FINISHED COLOR TBD
E09	COLUMNS WRAPED WITH "SMARTSIDE" ENGINEERED WOOD TRIM BORADS FACTORY FINISHED COLOR TBD
E10	FYPON OR EQUAL DECORATIVE ROUND LOUVER & TRIM
E11	DECORATIVE TRUSS & TRIM PAINTED COLOR TBD
E12	CULTURED STONE VENEER PIER WITH CONCRETE CAP
E13	STANDING SEAM METAL ROOF, COLOR TBD
E14	"MIRATEC" AND "EXTIRA" COMPOSITE BOARDS (PANEL & TRIMS) PAINTED, COLOR TBD
E15	"SMARTSIDE" ENGINEERED WOOD TRIM BOARDS FACTORY FINISHED COLOR TBD
E16	CUPOLA (CONTRACTORS OPTION TO BUILD IN PLACE OR INSTALL PREMENUACTURED UNIT)
E17	CABLE PIPE RAIL WITH PAINTED POSTS COLOR TBD
E18	ROOF CANOPY WITH ASPHALT SHINGLES AND "SMARTSIDE" FASCIA BOARDS & SOFFITS

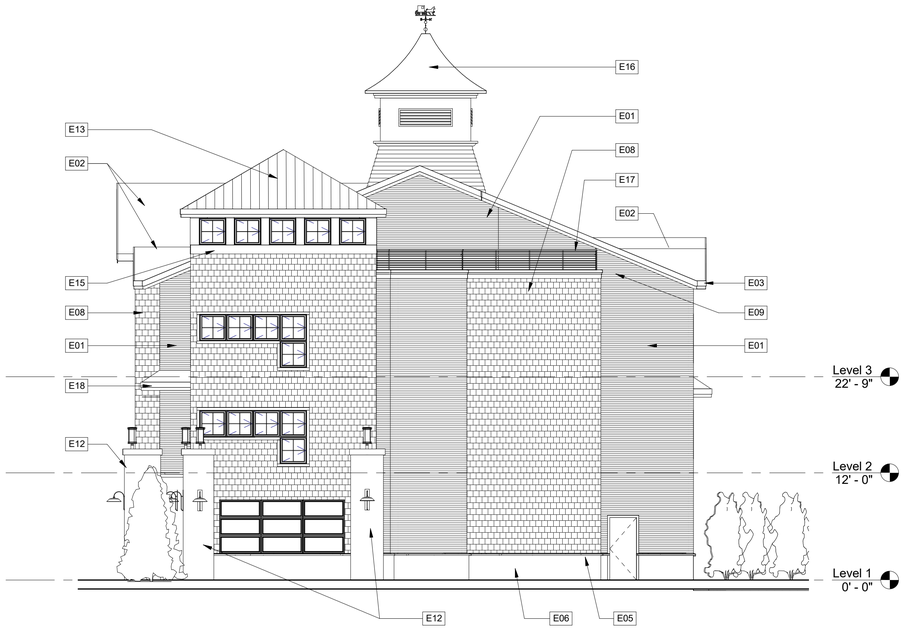

2 EAST ELEVATION
1/8" = 1'-0"

1 WEST ELEVATION
1/8" = 1'-0"

6/22/16

RE4ORM ARCHITECTURE
323 CLINTON STREET
SCHENECTADY, NY 12305
P:518.399.4174
F:518.399.4105
WWW.RE4ORMARCHITECTURE.COM

246 WEST AVE APARTMENTS

246 WEST AVE
SARATOGA SPRINGS, NY

EXTERIOR ELEVATIONS

A201

CONTRACTOR SHALL VERIFY ALL DIMENSION AT SITE. UNAUTHORIZED ALTERATIONS OR ADDITIONS TO THIS DOCUMENT IS A VIOLATION OF THE NEW YORK STATE EDUCATION LAW.

ELEVATION NOTES	
LABEL	ELEVATION NOTE
E01	"SMARTSIDE" ENGINEERED WOOD LAP SIDING FACTORY FINISHED COLOR TBD
E02	
E03	"SMARTSIDE" ENGINEERED WOOD TRIM FASCIA BOARDS & VENTED SOFFIT FACTORY FINISHED COLOR TBD
E04	"SMARTSIDE" ENGINEERED WOOD TRIM CORNER BOARDS FACTORY FINISHED COLOR TBD
E05	CULTURED STONE SILL
E06	CULTURED STONE VENEER TBD
E07	DECORATIVE HEAVY TIMBER BRACKETS, PAINTED COLOR TBD
E08	"SMARTSIDE" ENGINEERED WOOD SHAKE SIDING FACTORY FINISHED COLOR TBD
E09	COLUMNS WRAPED WITH "SMARTSIDE" ENGINEERED WOOD TRIM BORADS FACTORY FINISHED COLOR TBD
E10	FYPON OR EQUAL DECORATIVE ROUND LOUVER & TRIM
E11	DECORATIVE TRUSS & TRIM PAINTED COLOR TBD
E12	CULTURED STONE VENEER PIER WITH CONCRETE CAP
E13	STANDING SEAM METAL ROOF, COLOR TBD
E14	"MIRATEC" AND "EXTIRA" COMPOSITE BOARDS (PANEL & TRIMS) PAINTED, COLOR TBD
E15	"SMARTSIDE" ENGINEERED WOOD TRIM BOARDS FACTORY FINISHED COLOR TBD
E16	CUPOLA (CONTRACTORS OPTION TO BUILD IN PLACE OR INSTALL PREMENUACTURED UNIT)
E17	CABLE PIPE RAIL WITH PAINTED POSTS COLOR TBD
E18	ROOF CANOPY WITH ASPHALT SHINGLES AND "SMARTSIDE" FASCIA BOARDS & SOFFITS

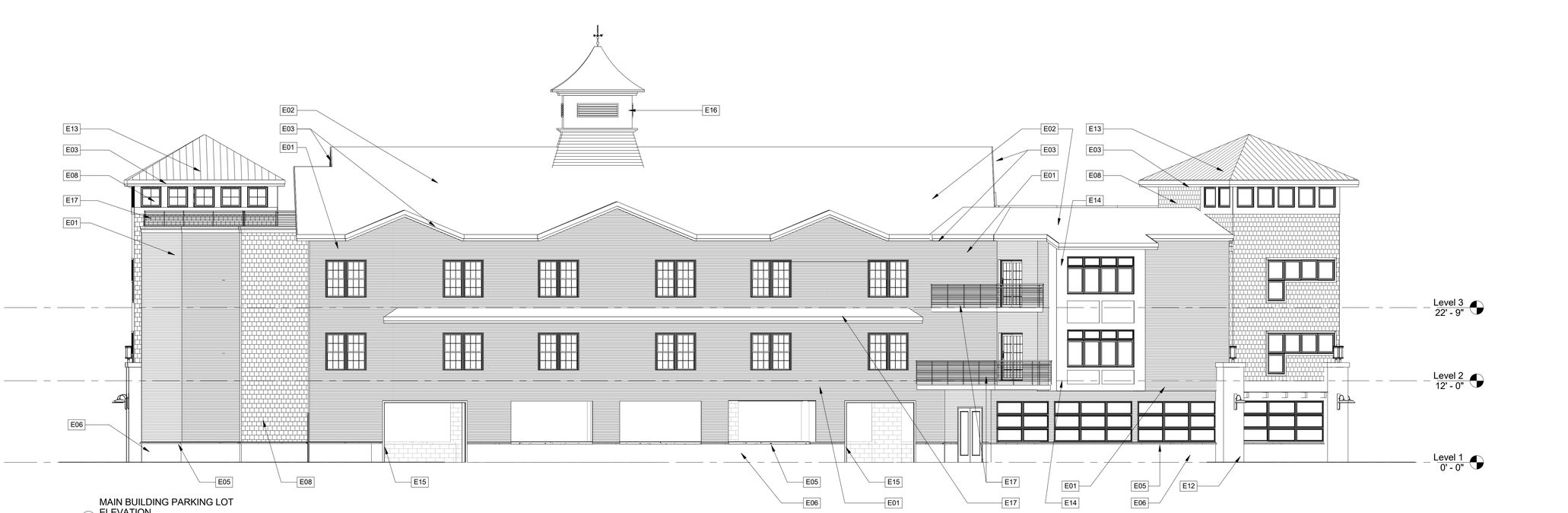

1 MAIN BUILDING PARKING LOT ELEVATION
1/8" = 1'-0"

6/22/16

RE4ORM ARCHITECTURE
323 CLINTON STREET
SCHENECTADY, NY 12305
P:518.399.4174
F:518.399.4105
WWW.RE4ORMARCHITECTURE.COM

246 WEST AVE APARTMENTS

246 WEST AVE
SARATOGA SPRINGS, NY

EXTERIOR ELEVATION

A202

CONTRACTOR SHALL VERIFY ALL DIMENSION AT SITE. UNAUTHORIZED ALTERATIONS OR ADDITIONS TO THIS DOCUMENT IS A VIOLATION OF THE NEW YORK STATE EDUCATION LAW.

246 WEST AVE APARTMENTS

Saratoga, New York

PERSPECTIVE

RE4ORM ARCHITECTURE

246 WEST AVE APARTMENTS

Saratoga, New York

PERSPECTIVE

BE4ORM ARCHITECTURE

246 WEST AVE APARTMENTS

Saratoga, New York

PERSPECTIVE

RE4ORM ARCHITECTURE

Site Plan
246 West Avenue Apartments

City of Saratoga Springs, New York

City PB#

June 23, 2016

Vicinity Map:

SCALE: NTS

CITY OF SARATOGA SPRINGS
STANDARD NOTES

1. All work must conform to all Federal, State and City Codes, specifications, ordinances, rules and regulations.
2. The elevation base for the contours and benchmarks are based on the National Geodetic Vertical Datum, 1929.
3. All refuse, debris and miscellaneous items to be removed shall be legally disposed of off-site by the Contractor to a location approved by the City Engineer.
4. The Contractor must set up a pre-construction meeting with the City Engineer prior to any construction. Construction inspections by the a designated representative of design professional are required. The cost of the construction inspection is the responsibility of the Applicant/Developer.
5. The contractor must obtain a blasting permit from the Building Inspector if any blasting is required for the project.
6. The contractor must obtain a street opening permit issued by the Department of Public Works for any work in the street or right-of-way of any City street, road or alley.
7. All points of construction ingress or egress shall be maintained to prevent tracking or flowing of sediment or debris onto a public road.
8. No Certificate of Occupancy will be issued until all site work has been completed in accordance with the approved plans; and an as-built drawing has been prepared in accordance with the requirements of the City Engineer.
9. The applicant must verify that the proposed project can accommodate the turning movements of any fire truck that the fire department so designates.

Approval

Approved under authority of a resolution adopted _____
by the Planning Board of the City of Saratoga Springs.

_____ Chairperson

Date Signed _____

SITE STATISTICS

PROPOSED USE:	16 Apartments	
TAX MAP PARCEL NUMBER	178.33-1-20&21	
LEASE LOT SIZE	.51 ACRES	
EXISTING ZONING	T-4 Urban Neighborhood	
BUILDING SETBACKS	REQUIRED	PROPOSED
BUILD-TO-LINE	12'-18'	12.5'
FRONTAGE BUILDOUT	50%MIN.	63%
SIDE SETBACK	12' AVERAGE PRINCIPAL BLDG	15.5'
	6' MIN OUTBUILDING	8.02'
REAR SETBACK	24' PRINCIPAL BLDG	27.07'
	5' MIN OUTBUILDING	9.34'
BUILDING HEIGHT	2 STORY MIN, 40' MAX HT.	3 STORY, 40'-0"
PARKING REQUIREMENTS		
RESIDENCES WITHIN T-4 ZONE		
1.5 PER DWELLING UNIT	24 SPACES	24 SPACES 7 SPACES OUTSIDE BUILDINGS 17 SPACES WITHIN THE BUILDINGS

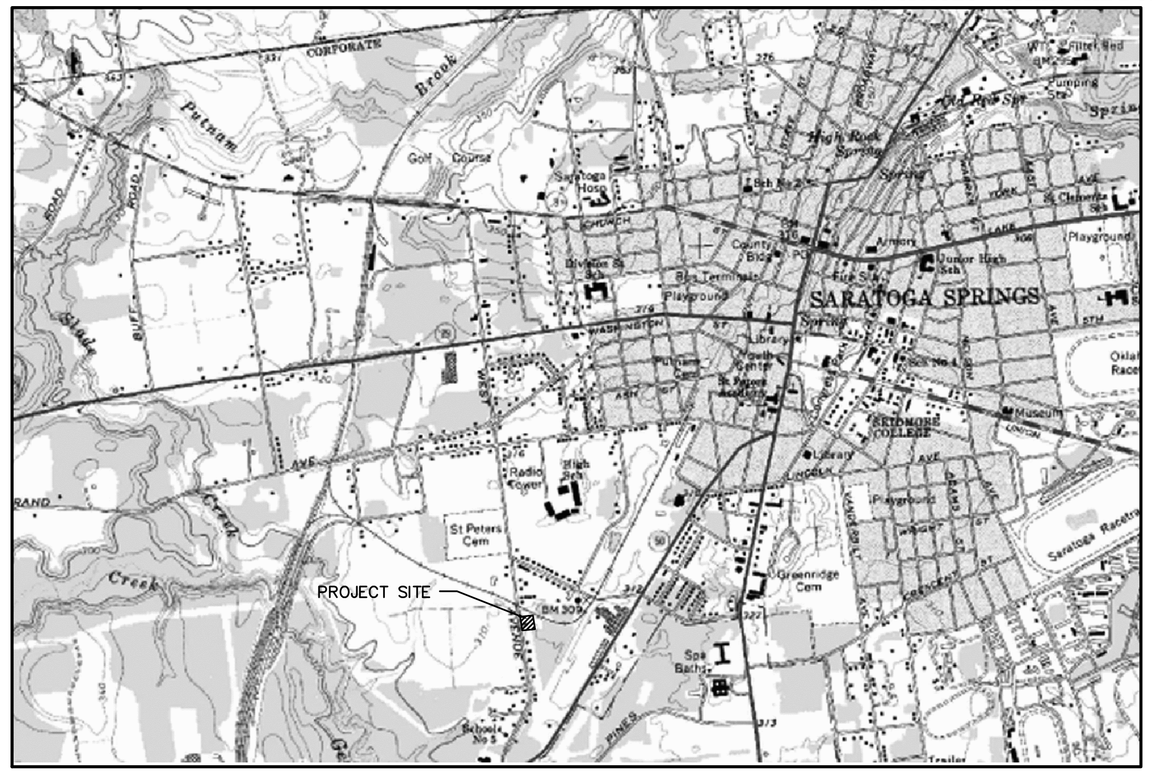

Project Location Map:

SCALE: NTS

SHEET INDEX:

	COVER SHEET
	BOUNDARY AND TOPOGRAPHIC SURVEY
L-1	SITE DEMOLITION AND PREPARATION PLAN
L-2	SITE LAYOUT AND MATERIALS PLAN
L-3	SITE GRADING AND DRAINAGE PLAN
L-4	SITE UTILITY PLAN
L-4.1	OFF-SITE WATERLINE CONNECTION
L-5	SITE LANDSCAPE PLAN
L-6	SITE LIGHTING PLAN
L-7	SITE DETAILS
L-8	SITE DETAILS
L-9	SITE DETAILS
L-10	SITE DETAILS
L-11	STORMWATER DETAILS
L-12	SITE DETAILS

Applicant:

John-Paul Builders, LLC
796 Burdeck Street
Schenectady, NY 12306

Prepared By:

the LA group
Landscape Architecture
and Engineering, P.C.

40 Long Alley
Saratoga Springs
New York 12866
518/587-8100
Telefax 518/587-0180

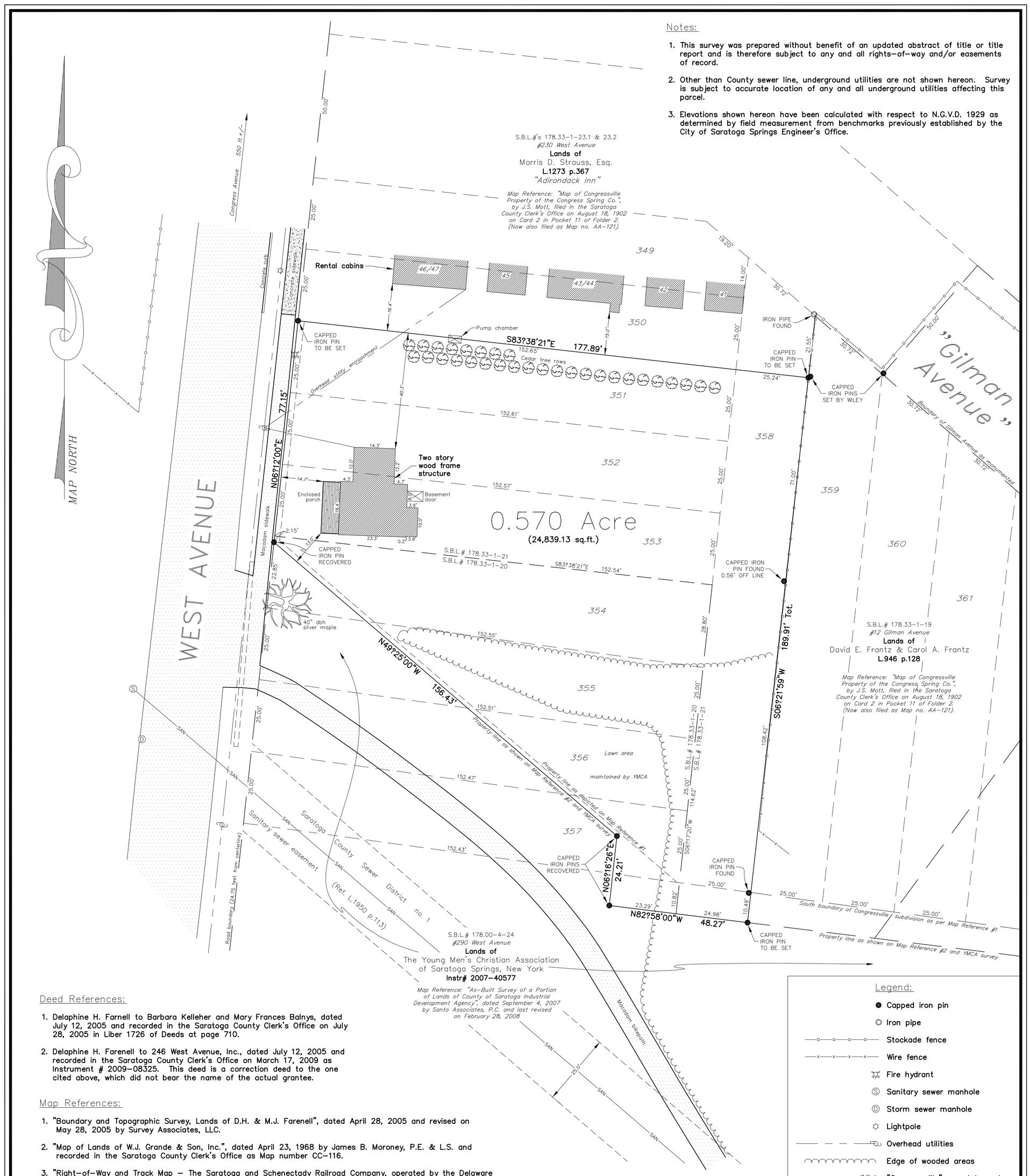

Notes:

1. This survey was prepared without benefit of an updated abstract of title or title report and is therefore subject to any and all rights-of-way and/or easements of record.
2. Other than County sewer line, underground utilities are not shown hereon. Survey is subject to accurate location of any and all underground utilities affecting this parcel.
3. Elevations shown hereon have been calculated with respect to N.G.V.D. 1929 as determined by field measurement from benchmarks previously established by the City of Saratoga Springs Engineer's Office.

Deed References:

1. Delaphine H. Farnell to Barbara Kelleher and Mary Frances Balnys, dated July 12, 2005 and recorded in the Saratoga County Clerk's Office on July 28, 2005 in Liber 1726 of Deeds at page 710.
2. Delaphine H. Farenell to 246 West Avenue, Inc., dated July 12, 2005 and recorded in the Saratoga County Clerk's Office on March 17, 2009 as Instrument # 2009-08325. This deed is a correction deed to the one cited above, which did not bear the name of the actual grantee.

Map References:

1. "Boundary and Topographic Survey, Lands of D.H. & M.J. Farenell", dated April 28, 2005 and revised on May 28, 2005 by Survey Associates, LLC.
2. "Map of Lands of W.J. Grande & Son, Inc.", dated April 23, 1968 by James B. Moroney, P.E. & L.S. and recorded in the Saratoga County Clerk's Office as Map number CC-116.
3. "Right-of-Way and Track Map - The Saratoga and Schenectady Railroad Company, operated by the Delaware & Hudson Company, Saratoga Division - Main Line - Ballston Spa to Saratoga Springs, Station 1951+85.5 to Station 2005+90", dated June 30, 1916 and filed in the offices of C.P. Rail.
4. Map no. 37, Parcel no. 44 for the Grade Crossing Eliminations of the Railroad operated by the Delaware & Hudson Railroad Corporation through the City of Saratoga Springs and the Towns of Greenfield and Wilton", dated August 5, 1957 and filed in the Saratoga County Clerk's Office. Notice of appropriation was recorded in Liber 658 of Deeds at page 169.

Legend:

- Capped iron pin
- Iron pipe
- Stockade fence
- Wire fence
- Fire hydrant
- Sanitary sewer manhole
- Storm sewer manhole
- Lightpole
- Overhead utilities
- Edge of wooded areas
- 354 "Congressville" map lot number

PREPARED FOR:
THE PIKE COMPANY
210 CLIFTON CORPORATE PARKWAY
CLIFTON PARK, N.Y. 12065

REV.	DATE	BY	CHK.	DESCRIPTION
2	06/29/12	DRP	ACS	PROPERTY LINES REVISED
1	10/31/11	AJS	ACS	PROPOSED BOUNDARY LINE AGREEMENT
0	09/30/11	SRS	ACS	ORIGINAL SURVEY DATE

Certifications indicated hereon signify that this survey was prepared in accordance with the existing Code of Practice of Land Surveys adopted by the N.Y. State Association of Professional Land Surveyors. Said certifications shall run only to the title insurance company, governmental agency, and lending institution listed hereon and to the assignees of the lending institution. Certifications are not transferable to additional institutions or subsequent owners.

Unauthorized alteration or addition to a survey map bearing a licensed land surveyor's seal is a violation of Section 7209, Subdivision 2 of the N.Y. State Education Law. Only copies from the original of this survey marked with an original of the land surveyor's embossed seal shall be considered to be valid copies.

In addition, only copies from the original of this survey marked with an original of the land surveyor's signature in RED shall be considered to be valid copies.

SANTO ASSOCIATES
LAND SURVEYING AND ENGINEERING, P.C.
1 BARNEY ROAD • SUITE 109
CLIFTON PARK, NY 12065
PHONE: (518) 383-8001 • FAX: (518) 383-6026

(C) 2011 Santo Associates P.C. "All Rights Reserved"
"Unauthorized Duplication is a Violation of Applicable Laws."

ANDREW C. SCHAUFFERT, L.S. LICENSE NO. 049901

SURVEY MAP OF LANDS OF

246 WEST AVENUE, INC.

AT 246 WEST AVENUE, SARATOGA SPRINGS, N.Y. 12866

DRAWN BY: SRS	CITY OF: SARATOGA SPRINGS	SCALE: 1" = 20'
CHECKED BY: ACS	COUNTY OF: SARATOGA	DWG. NO.: 7277
DATE: 09/30/11	STATE OF: NEW YORK	REV.: 2

LANDS OF
DAVID E. FRANTZ & CAROL A.
FRANTZ

Rental cabins

41

42

43/44

45

46/47

Cedar tree rows

EXISTING CEDAR HEDGE TO BE RELOCATED COORDINATE LOCATION WITH OWNER OF "ADIRONDACK INN", CONTRACTOR TO GUARANTEE THE TRANSPLANTED TREES FOR ONE YEAR. REPLACEMENT TREES IF NEEDED WILL BE ARBORVITAE 8'–10' HT.

Pump chamber

PUMP CHAMBER TO BE REMOVED COORDINATE LOCATION AND REMOVAL WITH OWNER OF "ADIRONDACK INN"

LANDS OF
MORRIS D. STRAUSS, ESQ.
"ADIRONDACK INN"

Overhead utility

Two story wood frame structure

Basement door

Enclosed porch

B1

B2

B3

B4

B5

SILT FENCE (TYP.)

DISEASED TREE TO BE REMOVED

6" dbl. silver maple

LANDS OF
THE YOUNG MEN'S CHRISTIAN
ASSOCIATION
OF SARATOGA SPRINGS

Saratoga County Sewer District no. 1

Sanitary sewer easement (Ref. L.1950

Concrete sidewalk

Macadam sidewalk

Concrete curb

EXISTING HYDRANT TO BE REMOVED, PIPE AND CAP LINE PROPERLY

2 L–12 STABILIZED CONSTRUCTION ENTRANCE

EXISTING CULVERT PIPE TO BE REMOVED

Inv.in=302.50

WEST AVENUE

Existing 36" dia

SITE PREPARATION & DEMOLITION NOTES:

1. ALL REFUSE, DEBRIS AND MISCELLANEOUS ITEMS TO BE REMOVED, THAT ARE NOT TO BE STOCKPILED FOR LATER USE ON THE PROJECT OR DELIVERED TO THE OWNER, SHALL BE LEGALLY DISPOSED OF OFF–SITE BY THE CONTRACTOR.
2. ALL ITEMS REQUIRING REMOVAL SHALL BE REMOVED TO FULL DEPTH TO INCLUDE BASE MATERIAL AND FOOTINGS OR FOUNDATIONS AS APPLICABLE, AND REUSED AS DIRECTED BY THE OWNER OR LEGALLY DISPOSED OF OFF–SITE BY CONTRACTOR.
3. CONTRACTOR SHALL STRIP AND STOCKPILE EXISTING TOPSOIL TO FULL DEPTH WITHIN LIMIT OF GRADING BEFORE COMMENCING EXCAVATION AND GRADING OPERATIONS. TOPSOIL SHALL NOT BE REMOVED FROM THE SITE, UNLESS APPROVED BY THE OWNER'S REPRESENTATIVE.
4. THE CONTRACTOR IS RESPONSIBLE FOR ANY DAMAGE TO EXISTING CONDITIONS THAT ARE DUE TO CONTRACTOR OPERATIONS AND WHICH ARE OUTSIDE THE LIMIT OF WORK.
5. THE CONTRACTOR SHALL COORDINATE ALL ADJUSTMENT OR ABANDONMENT OF UTILITIES WITH THE RESPECTIVE UTILITY COMPANY AND PAY ALL ASSOCIATED COSTS.
6. ALL POINTS OF CONSTRUCTION INGRESS AND EGRESS SHALL BE PROTECTED TO PREVENT TRACKING OF MUD ONTO PUBLIC WAYS. ANY MUD ON PUBLIC WAYS ORIGINATING FROM THE JOB SITE SHALL BE CLEANED BY THE CONTRACTOR DAILY.
7. CONTRACTOR SHALL SECURE ALL PERMITS THAT MAY BE REQUIRED FROM ALL JURISDICTIONS AFFECTED BY THIS WORK.
8. ANY TREE AND SHRUB REMOVAL SHALL INCLUDE THE FILLING, CUTTING, GRUBBING OUT OF ENTIRE ROOT SYSTEM AND SATISFACTORY OFF–SITE DISPOSAL OF ALL TREES, SHRUBS, STUMPS, VEGETATIVE AND EXTRANEOUS DEBRIS PRODUCED THROUGH THE REMOVAL OPERATIONS.
9. CONTRACTOR SHALL APPLY FOR AND OBTAIN DEMOLITION PERMIT FROM CITY PRIOR TO ANY DEMOLITION WORK. ON–SITE EXISTING WATER AND SEWER DISCONNECTIONS MUST BE DEMONSTRATED TO CITY ENGINEER.

BORING RESULTS FROM GEOTECHNICAL EVALUATION FOR PROPOSED OFFICE COMPLEX: PREPARED BY, DENTE ENGINEERING: APRIL 2005

BORING 1:
0–8" TOPSOIL
8"–96" BROWN F–M SAND, TRACE SILT: WET AT 84"
96"–21' GRADES F–C SAND, LITTLE FINE GRAVEL, TRACE SILT
21'–26' GRADES DARK GRAY
26'–31' GRADES GRAY FINE SAND, TRACE SILT
31'–46' GRAY F–M SAND, SOME SILT
46'–51' GRADES SILT, TRACE FINE SAND
51'–52' GRADES FINE SAND, TRACE SILT

BORING 2:
0–10" TOPSOIL
10"–60" BROWN F–M SAND, TRACE SILT
60"–84" BROWN FINE SAND & SILT WITH PARTINGS FINE SAND, TRACE SILT
84"–17' FROWN F–C SAND, TRACE TO LITTLE FINE GRAVEL, TRACE SILT: WET AT 84"

BORING 3:
0–12" TOPSOIL BECOMES BROWN F–M SAND TRACE SILT
12"–9' DARK BROWN F–M SAND, TRACE SILT: WET AT 9'
9'–16' BROWN F–C SAND, TRACE TO LITTLE FINE GRAVEL, TRACE SILT
16'–17' BECOMES GRAY SAND

BORING 4:
0–12" TOPSOIL BECOMES BROWN F–M SAND, TRACE SILT
12"–96" BROWN F–M SAND, TRACE SILT
96"–10' MOTTLED SILT, SOME FINE SAND: WET AT 10'
10'–16' BROWN F–C SAND, TRACE SILT
16'–17' GRADES TRACE FINE GRAVEL

BORING 5:
0–8" TOPSOIL
8"–84" BROWN F–M SAND, SOME SILT TRACE GRAVEL: POSSIBLE FILL: WET AT 60"
84"–16' BROWN F–C SAND TRACE GRAVEL & SILT
16'–17' BECOMES GRAY/BROWN SAND

LEGEND

- EXISTING BUILDING OR PAVEMENT TO BE REMOVED
- EXISTING VEGETATION TO BE REMOVED
- SF — SILT FENCE TYP. (3 / L–11)

GRAPHIC SCALE
10 0 5 10 20
1 inch = 10 feet

Approval
Approved under authority of a resolution adopted _____ by the Planning Board of the City of Saratoga Springs.
_____ Chairperson
Date Signed _____

the LA group
Landscape Architecture and Engineering, PC
40 Long Alley
Saratoga Springs
New York 12866
P 518/587-8100
F 518/587-0180
www.thelagroup.com

Unauthorized alteration or addition to this document is a violation of Section 7209 of the New York State Education Law

© the LA Group 2008

Design MCB
Drawn MCB
Checked CMI

PREPARED FOR:
John-Paul Builders, LLC
796 Burdeck Street
Schenectady, NY 12306

246 WEST AVENUE APARTMENTS
SARATOGA SPRINGS, NY

Title
SITE DEMOLITION AND PREPERATION PLAN

Revisions

City #:
Project: 201178
Date: 6/23/2016

Drawing
L-1

Plotted By: ANDREW LONGJACKER
Save Date: 6/22/2016 3:53 PM
File Name: G:\Proj\201178\CAD\L1\178_West_Ave_246\201178CADL1_EC.dwg

LANDS OF
DAVID E. FRANTZ & CAROL A.
FRANTZ

CONCRETE DUMPSTER PAD WITH FENCE ENCLOSURE (8/L-8)
DO NOT ENTER SIGN
PARKING LOT LIGHT POLE (6/L-8) (1/L-6)
PAVEMENT MARKING
LAWN
24' REAR YARD BUILDING SETBACK LINE
STONE DRIP STRIP TYP.
CONCRETE TRANSITION CURB (3/L-7)
CONCRETE CURB TYP. (2/L-7)
GRAVEL DRIP STRIP TYP.
BUILDING OVERHANG TYP.
BUILDING FOOTPRINT LINE TYP.
EXISTING ASPHALT BIKE PATH.
ASPHALT PAVING (1/L-7)
STONE DRIP STRIP TYP.
KNOX BOX LOCATION
12' FRONT BUILD TO LINE
STOP SIGN. (8/L-7)
DETECTABLE WARNING STRIP TYP. (11/L-7)
6' WIDE BENCH (4/L-12)
INTERPRETIVE SIGN (8/L-12)
PROPOSED BIKE RACK (9/L-12)
CONCRETE PAVERS (12/L-7)
EXISTING STREET LIGHT
DECORATIVE STREET LIGHT (4/L-8)
UTILITY POLE TO REMAIN
CONCRETE PAVEMENT ENTRANCE (7/L-7)
CONCRETE WALK TYP. (5/L-7)
GRAVEL DRIP STRIP TYP. (1/L-8)

LANDS OF
THE YOUNG MEN'S CHRISTIAN
ASSOCIATION
OF SARATOGA SPRINGS

LANDS OF
MORRIS D. STRAUSS, ESQ.
"ADIRONDACK INN"

Saratoga County Sewer District no. 1
Sanitary sewer easement (Ref. L.1950 p.113)

Rental cabins
41
42
43/44
45
46/47

Cedar Trees & Bushes

Concrete sidewalk
Macadam sidewalk
Concrete curb

Existing 36"dia

WEST AVENUE

GRAPHIC SCALE
10 0 5 10 20
1 inch = 10 feet

Approval
Approved under authority of a resolution adopted
by the Planning Board of the City of Saratoga Springs.
Chairperson
Date Signed

LAYOUT NOTES

1. ALL LINES AND DIMENSIONS ARE PARALLEL OR PERPENDICULAR TO THE LINES FROM WHICH THEY ARE MEASURED UNLESS OTHERWISE INDICATED.
2. ALL LINE AND GRADE PER DRAWINGS SHALL BE LAID OUT BY A NEW YORK STATE REGISTERED CIVIL ENGINEER OR SURVEYOR ENGAGED BY THE CONTRACTOR. ALL STAKED LAYOUTS OF PAVEMENTS AND SITE IMPROVEMENTS SHALL BE APPROVED BY THE OWNER'S REPRESENTATIVE PRIOR TO INSTALLATION.
3. STORAGE AREAS FOR CONTRACTOR'S EQUIPMENT AND MATERIALS SHALL BE ON AND WITHIN LIMITS OF WORK AS SHOWN ON THE PLANS AND AS APPROVED BY THE OWNER'S REPRESENTATIVE.
4. THE CONTRACTOR SHALL VERIFY ALL EXISTING CONDITIONS IN THE FIELD PRIOR TO CONSTRUCTION AND REPORT ANY DISCREPANCIES IN THE SITE SURVEY TO THE OWNER'S REPRESENTATIVE PRIOR TO STARTING WORK.
5. AT ALL LOCATIONS WHERE EXISTING CURBING, BITUMINOUS CONCRETE ROADWAY OR CONCRETE SIDEWALK ABUT NEW CONSTRUCTION, THE EDGE OF THE EXISTING CURB OR PAVEMENT SHALL BE SAW CUT TO A CLEAN, SMOOTH EDGE. PROVIDE PAVEMENT KEY AS DETAILED. TACK COAT EXPOSED EDGES OF EXISTING BITUMINOUS CONCRETE PRIOR TO PLACEMENT OF NEW BITUMINOUS CONCRETE PAVEMENT.
6. BITUMINOUS PAVEMENT SHALL NOT BE LAID WHEN GROUND TEMPERATURE IS LESS THAN 40° F. AND AIR TEMPERATURE IS LESS THAN 50° F.
7. ALL LIGHT STANDARDS SHALL BE LOCATED AT A MINIMUM OF TWO FEET SIX INCHES (2'-6") FROM BACK OF EOP; VERIFY W/ OWNER'S REPRESENTATIVE PRIOR TO INSTALLATION.
8. DIMENSIONS ON PARKING LOTS AND ROADWAYS ARE FROM FACE OR BOTTOM OF CURB TO FACE OR BOTTOM OF CURB.
9. ALL NEW WORK SHALL BE STAKED-OUT PRIOR TO CONSTRUCTION. THE OWNER'S REPRESENTATIVE SHALL BE NOTIFIED OF ANY DISCREPANCIES.
10. FIELD ADJUSTMENTS MUST BE APPROVED BY THE OWNER'S REPRESENTATIVE AND CITY ENGINEER WITHOUT EXCEPTION.
11. ALL EXISTING UTILITIES SHOWN IN THEIR RELATIVE POSITION. THE CONTRACTOR IS RESPONSIBLE FOR VERIFYING THE VERTICAL AND HORIZONTAL POSITION OF EXISTING UTILITIES PRIOR TO CONSTRUCTION.

LEGEND

CURB
CONCRETE SIDEWALK (SC, EJ)
PROPERTY LINE
POWER LINE EASEMENT
ACCESSIBLE PARKING
TRAFFIC PATTERN ARROW
SIGNAGE
REINFORCED SWALE

the LA group
Landscape Architecture
and Engineering, PC
40 Long Alley
Saratoga Springs
New York 12866
P 518/587-8100
F 518/587-0180
www.thelagroup.com

Unauthorized alteration or addition to this document is a violation of Section 7209 of the New York State Education Law

© the LA Group 2008

Design MCB
Drawn MCB
Checked CMI

PREPARED FOR:
John-Paul Builders, LLC
796 Burdeck Street
Schenectady, NY 12306

246 WEST AVENUE APARTMENTS
SARATOGA SPRINGS, NY

Revisions

City #:
Project: 201178
Date: 6/23/2016

Drawing
L-2

Title
SITE LAYOUT AND MATERIALS PLAN

Plotted By: MATT BROBSTON
Save Date: 6/23/2016 9:53:21 AM
File Name: G:\Projects\201178_West_Ave_246\201178CAD\L-2_LAYOUT.dwg

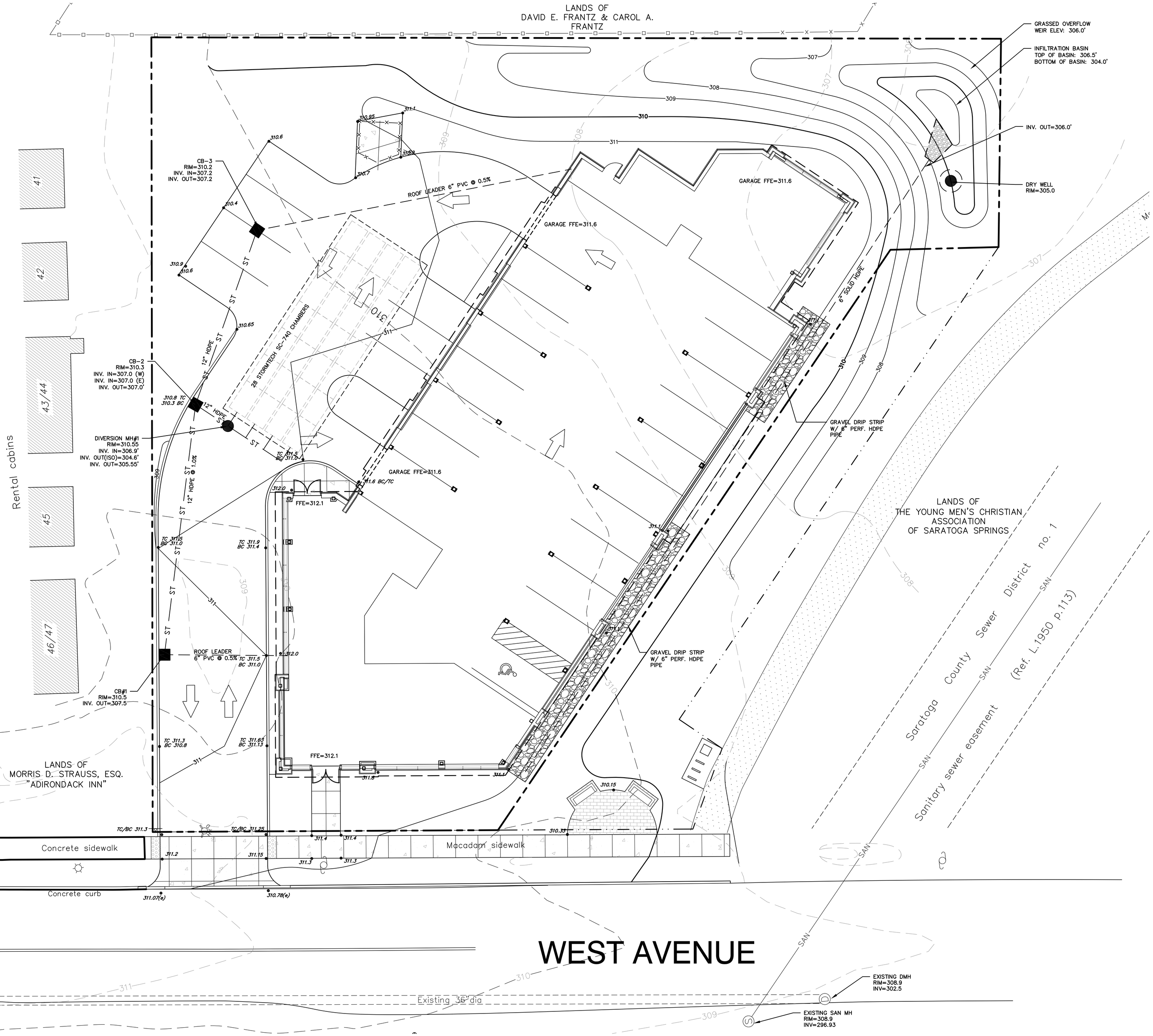

GRADING NOTES

1. SURVEY INFORMATION PROVIDED BY SANTO ASSOCIATES LAND SURVEYING AND ENGINEERING, P.C., BASED UPON A FIELD SURVEY COMPLETED SEPTEMBER 30, 2011
2. ALL GRADES SET IN THE FIELD SHALL BE COMPLETED BY A NEW YORK STATE LICENSED LAND SURVEYOR.
3. THE CONTRACTOR SHALL VERIFY ALL CONDITIONS IN THE FIELD AND REPORT ANY DISCREPANCIES BETWEEN THE PLANS AND ACTUAL CONDITIONS TO THE OWNER'S REPRESENTATIVE.
4. THE CONTRACTOR SHALL VERIFY PROPOSED GRADES PRIOR TO CONSTRUCTION AND REPORT ANY DISCREPANCIES TO THE OWNER'S REPRESENTATIVE.
5. THE CONTRACTOR SHALL PROVIDE DUST AND EROSION CONTROL AS APPROVED BY THE OWNER'S REPRESENTATIVE.
6. ALL FILL SLOPES 3:1 OR GREATER SHALL RECEIVE BIO-DEGRADEABLE FABRIC OR APPROVED EQUAL FOR EROSION CONTROL, UNLESS OTHERWISE SHOWN OR DIRECTED BY THE OWNER'S REPRESENTATIVE.
7. THE CONTRACTOR SHALL BLEND ALL NEW EARTHWORK INTO EXISTING GRADES AT THE LIMITS OF GRADING. PROVIDE SMOOTH ROUNDED TRANSITIONS AT ALL TOP AND BOTTOM OF SLOPES.

LEGEND

- EXISTING CONTOUR LINE
- PROPOSED CONTOUR LINE
- EXISTING STORM MAIN
- PROPOSED STORM MAIN
- PROPOSED BUILDING DRAINAGE LINES
- PROPOSED DRYWELL
- PROPOSED CATCH BASIN
- EXISTING SANITARY SEWER MANHOLE
- EXISTING SANITARY SEWER MAIN LINE

GRAPHIC SCALE

10 0 5 10 20

1 inch = 10 feet

Approval

Approved under authority of a resolution adopted _____ by the Planning Board of the City of Saratoga Springs.

_____ Chairperson

Date Signed _____

the LA group
Landscape Architecture and Engineering, PC
40 Long Alley
Saratoga Springs
New York 12866
P 518/587-8100
F 518/587-0180
www.thelagroup.com

Unauthorized alteration or addition to this document is a violation of Section 7209 of the New York State Education Law

© the LA Group 2008

Design MCB
Drawn MCB
Checked CMI

PREPARED FOR:
John-Paul Builders, LLC
796 Burdeck Street
Schenectady, NY 12306

246 WEST AVENUE APARTMENTS

SARATOGA SPRINGS, NY

Title: SITE GRADING AND DRAINAGE PLAN

Revisions

City #:
Project: 201178
Date: 6/23/2016

Drawing L-3

Plotted By: MATT BRODESTON
Plot Date: 6/23/2016 11:03 AM
File Name: G:\Projects\2011\178\CAD\L3_West_Ave_JNB20117\CAD\L3_GRADING.dwg

LANDS OF
DAVID E. FRANTZ & CAROL A.
FRANTZ

LANDS OF
THE YOUNG MEN'S CHRISTIAN
ASSOCIATION
OF SARATOGA SPRINGS

LANDS OF
MORRIS D. STRAUSS, ESQ.
"ADIRONDACK INN"

GARAGE FF ELEV.=311.6

FF ELEV.=312.1

SANITARY INV=303.10

3 L-10 SANITARY CLEANOUT
INV=304.58

Concrete sidewalk

Macadam sidewalk

Concrete curb

WEST AVENUE

Saratoga County Sewer District no. 1

Sanitary sewer easement (Ref. L.1950 p.113)

6" D.I.P. WATERLINE

54 LF - 6" PVC SDR26 @ 5.0%

4 L-9 INSTALL 12"X6" TEE, 6" GATE VALVE, AND 12" BUTTERFLY VALVE

12" D.I.P. WATERMAIN

SEE SHEET L-4.1 FOR OFF-SITE WATERLINE

1 L-9

5 L-9

Existing 36"dia

SMH-1
RIM=309.75
6" INV IN=300.4
8" INV OUT=299.91

1 L-10

56 LF - 8" C-900 @ 0.5%

EXISTING SAN MH
RIM=308.9
INV=296.93
INSIDE DROP CONNECTION
8" INV IN=299.63

CAP END FOR FUTURE CONNECTION

Plotted By: MATT BROBSTON
Save Date: 6/23/2016 5:18 PM
File Name: C:\Projects\201178_West_Ave_246\2011178CADD-4_UTIL.dwg

WATER SYSTEM NOTES

A. The location of underground utilities shown on this plan are for information only, and all utilities may not be shown. The Contractor shall contact U.F.P.O. (1-800-962-7962) and the proper local authorities or respective utility company having jurisdiction to field verify the location of all existing utilities before commencing work. Any costs incurred by the Contractor due to failure to contact the proper authorities shall become the responsibility of the Contractor.

B. Extend designated limit of work as necessary to accomplish site utility work as required by these Drawings and Specifications.

C. Water Service lines 4-inch and larger:

1. Pipe and Fittings
   a. Ductile Iron Pipe: Class 52, ANSI/AWWA C151/A21.51
   b. Mechanical Joint fittings: ANSI standard A21.10 and A21.11 (AWWA C110 and C111) Class 350.
2. Coatings
   a. Double cement mortar lining on interior and coal tar seal coat on interior and exterior in accordance with ANSI/AWWA C104/A21.11
3. Joints
   a. Conforming with ANSI/AWWA C111/A21.11
   b. Pipe – push on joint.
   c. fittings – mechanical joint, plain rubber gasket together with retainer glands having steel set screws.
4. Valve Boxes
   a. Cast iron two piece valve box as manufactured by Clow (Model F2454), or approved equal.
   b. Cover must be stay-put type (Clow Model F2490), or approved equal, and be clearly marked "Water."
5. Anchorage
   a. Concrete thrust blocks must be used at all changes in direction of 11 1/4° or greater, and at all tees, caps, fittings, hydrants and plugs.

D. Water service lines 2 1/2-inch and smaller (no line shall be smaller than 3/4-inch):

1. Pipe
   a. Copper water tube, type K, soft temper for underground service.
2. Corporation Stops
   a. Mueller H-15008 with AWWA inlet threads or approved equal.
   b. Valves 1 1/2-inch and larger must be used with tapping sleeve.
3. Curb-stop
   a. Mueller H-15209 or H-15219 curb-stops, non-draining or approved equal.
4. Couplings
   a. Mueller H-15403 110 compression connections or approved equal; three part union for copper-to-copper type connection.
5. Curb-box
   a. Mueller H-10314
   b. Extension type with arch pattern base or approved equal.
   c. Solid cover (Mueller or approved equal).
   d. Stationary rod.

E. Valves, Hydrants, etc.:

1. Valves – Mueller A-2380-20
   a. All valves under 12-inches in diameter shall be mechanical joint resilient wedge (R/W).
   b. R/W valves, 3-inches and larger, shall be iron body, non-rising stem conforming to AWWA C509. Gland bolts shall be zinc coated steel.
   c. All valves shall have a maximum working pressure rating of 200 psig.
   d. All valves shall have mechanical joint ends conforming to ANSI A21.10/A21.11
   e. Valves shall open right (clockwise) with a standard 2-inch square operating nut with arrow cast on it showing the direction of opening.
   f. Each valve shall be furnished complete with necessary nuts, bolts, studs and gaskets.
2. Butterfly Valves – Mueller Lineseal III
   a. With the exception of tapping valves, all valves 12-inches in diameter and larger shall be Mueller, or approved equal, butterfly valves.
   b. Butterfly valves, 12-inches and larger, shall be iron body, bronze mounted, 360-degree rubber seat with stainless steel shaft conforming to AWWA C504. gland bolts shall be zinc coated steel.
   c. All valves shall have a minimum working pressure rating of 200 psi.
   d. All valves shall have mechanical joint ends conforming to ANSI A21.10, A21.11.
   e. Valves shall open right (clockwise) with a standard 2-inch square operating nut with arrow cast on it showing the direction of opening.
   f. Valve shall operate using traveling nut.
   g. The valve disk shall hold at any position without fluttering or creeping.
   h. The valve shall be equipped with a mechanical stop to prevent overtravel.
   i. Each valve shall be furnished complete with necessary nuts, bolts, studs, and gaskets which conform to AWWA C-110, AWWA C-111.
3. Fire Hydrants shall be Mueller A-423 compression-type hydrant, or approved equal having the following features
   a. 5 1/4-inch valve opening with a 6-inch inlet.
   b. Two (2) 2 1/2-inch hose nozzle and one (1) 4" Storz pumper nozzle; national standard thread.
   c. Operating nut shall be national standard, pentagon shaped, 1/8-inch point to flat.
   d. Break flange – traffic type construction
   e. Open right (clockwise)
   f. Hydrants are to be painted a minimum of one (1) coat primer and one (1) finish coat of industrial enamel as per paint schedule.

F. Water mains and services shall be installed at a minimum cover depth below finished grade of 5'-0".

G. Chlorination, pressure and leakage tests of water mains shall be in conformance with the specifications, NYSDOH regulations, and AWWA Standards and shall be performed under the supervision of the Owner's Representative and City Engineer. Bacteria examination after disinfection at a NYSDOH approved laboratory will take place prior to turning water main over to the Owner.

H. Water valve boxes, existing structure rims, new structure rims, etc., shall be adjusted to conform to new finished pavement grades unless otherwise noted and/or directed by Owner's Representative.

SEWER SYSTEM NOTES

1. Installation of polyvinyl chloride plastic (PVC) sewer pipe shall be in accordance with manufacturer's installation recommendations, and in accordance with ASTM D 2321.
2. Manhole frames and covers shall be Campbell Foundry Co. pattern No. 12038 or approved equal. The cover shall be embossed with "City of Saratoga Springs Sanitary Sewer". Provide (4) 7/8" dia. vent holes in cover.
3. Sanitary sewer manholes shall be precast reinforced concrete, complying with ASTM C 478. Base section to be pre-cast with integral floor. Top section shall be precast eccentric cone or flat slab traffic top as required. Steps of copolymer polypropylene integrally cast into the manhole sidewalls. Pipe to manhole connection shall be "Press-Wedge II" seal, or approved equivalent.
4. All sewer piping and fittings shall conform to the Standard Specifications for PVC pipe, ASTM designation D-3034-78 or latest revision and to the dimensions and tolerances of classification SDR-26 with single gasket push-on joints.
5. Product data information and shop Drawings for materials proposed for use by the contractor shall be submitted to and approved by the Architect prior to the placement of any orders for said materials.
6. Leakage outward or inward shall not exceed 200 gallons per inch of pipe diameter per mile per day for any section of the system. Leakage test shall be performed with a minimum positive head of 2 feet.

LEGEND

- EXISTING CONTOUR LINE
- PROPOSED CONTOUR LINE
- EXISTING STORM MAIN
- PROPOSED STORM MAIN
- PROPOSED BUILDING DRAINAGE LINES
- PROPOSED DRYWELL
- PROPOSED CATCH BASIN
- EXISTING SANITARY SEWER MANHOLE
- PROPOSED SANITARY SEWER MANHOLE
- EXISTING SANITARY SEWER MAIN LINE
- PROPOSED SANITARY SEWER MAIN LINE
- PROPOSED WATER LINE

GRAPHIC SCALE
10 0 5 10 20
1 inch = 10 feet

Approval

Approved under authority of a resolution adopted _____ by the Planning Board of the City of Saratoga Springs.

_____ Chairperson

Date Signed _____

the LA group
Landscape Architecture and Engineering, PC
40 Long Alley
Saratoga Springs
New York 12866
P 518/587-8100
F 518/587-0180
www.thelagroup.com

Unauthorized alteration or addition to this document is a violation of Section 7209 of the New York State Education Law

© the LA Group 2008

Design MCB
Drawn MCB
Checked CMI

PREPARED FOR:
John-Paul Builders, LLC
796 Burdeck Street
Schenectady, NY 12306

246 WEST AVENUE APARTMENTS

SARATOGA SPRINGS, NY

Title
SITE UTILITY PLAN

Revisions

City #:
Project: 201178
Date: 6/23/2016

Drawing
L-4

WATER SYSTEM NOTES

A. The location of underground utilities shown on this plan are for information only, and all utilities may not be shown. The Contractor shall contact U.F.P.O. (1-800-962-7962) and the proper local authorities or respective utility company having jurisdiction to field verify the location of all existing utilities before commencing work. Any costs incurred by the Contractor due to failure to contact the proper authorities shall become the responsibility of the Contractor.

B. Extend designated limit of work as necessary to accomplish site utility work as required by these Drawings and Specifications.

C. Water Service lines 4-inch and larger:

1. Pipe and Fittings
   a. Ductile Iron Pipe: Class 52, ANSI/AWWA C151/A21.51
   b. Mechanical Joint fittings: ANSI standard A21.10 and A21.11 (AWWA C110 and C111) Class 350.

2. Coatings
   a. Double cement mortar lining on interior and coal tar seal coat on interior and exterior in accordance with ANSI/AWWA C104/A21.11

3. Joints
   a. Conforming with ANSI/AWWA C111/A21.11
   b. Pipe – push on joint.
   c. fittings – mechanical joint, plain rubber gasket together with retainer glands having steel set screws.

4. Valve Boxes
   a. Cast iron two piece valve box as manufactured by Clow (Model F2454), or approved equal.
   b. Cover must be stay-put type (Clow Model F2490), or approved equal, and be clearly marked "Water."

5. Anchorage
   a. Concrete thrust blocks must be used at all changes in direction of 11 1/4° or greater, and at all tees, caps, fittings, hydrants and plugs.

D. Water service lines 2 1/2-inch and smaller (no line shall be smaller than 3/4-inch):

1. Pipe
   a. Copper water tube, type K, soft temper for underground service.

2. Corporation Stops
   a. Mueller H-15008 with AWWA inlet threads or approved equal.
   b. Valves 1 1/2-inch and larger must be used with tapping sleeve.

3. Curb-stop
   a. Mueller H-15209 or H-15219 curb-stops, non-draining or approved equal.

4. Couplings
   a. Mueller H-15403 110 compression connections or approved equal; three part union for copper-to-copper type connection.

5. Curb-box
   a. Mueller H-10314
   b. Extension type with arch pattern base or approved equal.
   c. Solid cover (Mueller or approved equal).
   d. Stationary rod.

E. Valves, Hydrants, etc.:

1. Valves – Mueller A-2380-20
   a. All valves under 12-inches in diameter shall be mechanical joint resilient wedge (R/W).
   b. R/W valves, 3-inches and larger, shall be iron body, non-rising stem conforming to AWWA C509. Gland bolts shall be zinc coated steel.
   c. All valves shall have a maximum working pressure rating of 200 psig.
   d. All valves shall have mechanical joint ends conforming to ANSI A21.10/A21.11
   e. Valves shall open right (clockwise) with a standard 2-inch square operating nut with arrow cast on it showing the direction of opening.
   f. Each valve shall be furnished complete with necessary nuts, bolts, studs and gaskets.

2. Butterfly Valves – Mueller Lineseal III
   a. With the exception of tapping valves, all valves 12-inches in diameter and larger shall be Mueller, or approved equal, butterfly valves.
   b. Butterfly valves, 12-inches and larger, shall be iron body, bronze mounted, 360-degree rubber seat with stainless steel shaft conforming to AWWA C504. gland bolts shall be zinc coated steel.
   c. All valves shall have a minimum working pressure rating of 200 psi.
   d. All valves shall have mechanical joint ends conforming to ANSI A21.10, A21.11.
   e. Valves shall open right (clockwise) with a standard 2-inch square operating nut with arrow cast on it showing the direction of opening.
   f. Valve shall operate using traveling nut.
   g. The valve dish shall hold at any position without fluttering or creeping.
   h. The valve shall be equipped with a mechanical stop to prevent overtravel.
   i. Each valve shall be furnished complete with necessary nuts, bolts, studs, and gaskets which conform to AWWA C-110, AWWA C-111.

3. Fire Hydrants shall be Mueller A-423 compression-type hydrant, or approved equal having the following features
   a. 5 1/4-inch valve opening with a 6-inch inlet.
   b. Two (2) 2 1/2-inch hose nozzle and one (1) 4" Storz pumper nozzle; national standard thread.
   c. Operating nut shall be national standard, pentagon shaped, 1/8-inch point to flat.
   d. Break flange – traffic type construction
   e. Open right (clockwise)
   f. Hydrants are to be painted a minimum of one (1) coat primer and one (1) finish coat of industrial enamel as per paint schedule.

F. Water mains and services shall be installed at a minimum cover depth below finished grade of 5'-0".

G. Chlorination, pressure and leakage tests of water mains shall be in conformance with the specifications, NYSDOH regulations, and AWWA Standards and shall be performed under the supervision of the Owner's Representative and City Engineer. Bacteria examination after disinfection at a NYSDOH approved laboratory will take place prior to turning water main over to the Owner.

H. Water valve boxes, existing structure rims, new structure rims, etc., shall be adjusted to conform to new finished pavement grades unless otherwise noted and/or directed by Owner's Representative.

1 WATER AND STORM DRAIN CROSSING DETAIL

SCALE: NTS

SEWER SYSTEM NOTES

1. Installation of polyvinyl chloride plastic (PVC) sewer pipe shall be in accordance with manufacturer's installation recommendations, and in accordance with ASTM D 2321.

2. Manhole frames and covers shall be Campbell Foundry Co. pattern No. 1203B or approved equal. The cover shall be embossed with "City of Saratoga Springs Sanitary Sewer". Provide (4) 7/8" dia. vent holes in cover.

3. Sanitary sewer manholes shall be precast reinforced concrete, complying with ASTM C 478. Base section to be pre-cast with integral floor. Top section shall be precast eccentric cone or flat slab traffic top as required. Steps of copolymer polypropylene integrally cast into the manhole sidewalls. Pipe to manhole connection shall be "Press-Wedge II" seal, or approved equivalent.

4. All sewer piping and fittings shall conform to the Standard Specifications for PVC pipe, ASTM designation D-3034-78 or latest revision and to the dimensions and tolerances of classification SDR-26 with single gasket push-on joints.

5. Product data information and shop Drawings for materials proposed for use by the contractor shall be submitted to and approved by the Architect prior to the placement of any orders for said materials. Copy City engineer on shop drawings/ submittals

6. Leakage outward or inward shall not exceed 200 gallons per inch of pipe diameter per mile per day for any section of the system. Leakage test shall be performed with a minimum positive head of 2 feet.

NOTES PER SARATOGA COUNTY SEWER DISTRICT

1. SDR 26 PIPE WITH SDR 26/35 FITTINGS WILL BE USED FOR SERVICE LATERALS.
2. THE CONTRACTOR WILL CONTACT SCSD (518)664-7396 AT LEAST 48 HOURS BEFORE CONSTRUCTION BEGINS.
3. THE CONTRACTOR SHALL FIELD VERIFY AND CONFIRM GRADES OF EXISTING MANHOLES BEFORE CONSTRUCTION BEGINS.
4. NO DISCHARGE OF FLOWS WILL BE ALLOWED UNTIL FINAL APPROVAL OF THE PROJECT HAS BEEN GRANTED.

Approval
Approved under authority of a resolution adopted ______ by the Planning Board of the City of Saratoga Springs.
______ Chairperson
Date Signed ______

the LA group
Landscape Architecture and Engineering, PC
40 Long Alley
Saratoga Springs
New York 12866
P 518/587-8100
F 518/587-0180
www.thelagroup.com

Unauthorized alteration or addition to this document is a violation of Section 7209 of the New York State Education Law

© the LA Group 2008

Design MCB
Drawn MCB
Checked CMI

PREPARED FOR:
John-Paul Builders, LLC
796 Burdeck Street
Schenectady, NY 12306

246 WEST AVENUE APARTMENTS
SARATOGA SPRINGS, NY

Title
OFF-SITE WATERLINE CONNECTION

Revisions

City #:
Project: 201178
Date: 6/23/2016

Drawing
L-4.1

Plotted By: MATT BROBSTON
Save Date: 6/22/2016 5:19 PM
File Name: G:\Proj-2011\201178_West_Ave_246\201178CAD\L-4-1_OFFSITE_UTIL.dwg

LANDS OF
DAVID E. FRANTZ & CAROL A.
FRANTZ

5 AC | 3 PA | 5 AC | 6 PA | 4 AC | 7 PA

LAWN

7 PS

EXISTING CEDAR TREES
TO BE TRANSPLANTED

LAWN

LAWN

LAWN

LAWN

41

42

43/44

45

46/47

Rental cabins

Cedar trees

8 Rr

LANDS OF
THE YOUNG MEN'S CHRISTIAN
ASSOCIATION
OF SARATOGA SPRINGS

LAWN

LAWN

6 Ig

7 AR

3 MA

7 Bs

1 CC

TRANSPLANTED CEDAR TREES

LANDS OF
MORRIS D. STRAUSS, ESQ.
"ADIRONDACK INN"

LAWN

LAWN

Concrete sidewalk

Macadam sidewalk

LAWN

Concrete curb

Existing 36"dia

WEST AVENUE

PLANTING SCHEDULE

SYMBOL/KEY	QUANTITY	BOTANICAL NAME	COMMON NAME	SIZE	ROOT	COMMENTS
DECIDUOUS TREES						
AR	7	Acer rubrum Red Sunset	Red Sunset Red Maple	2 1/2 – 3" cal	B & B	
CC	1	Crataegus crusgalli inermis	Thornless cockspur hawthorn	2 1/2 – 3" cal	B & B	
Ms	3	Malus 'Cardinal'	Cardinal Crabapple	2 1/2 – 3" cal	B & B	Used small tree from zoning because of overhead wires
EVERGREEN TREES						
AC	14	Abies concolor	White Flr	6 – 7' ht	B & B	
PA	16	Picea Abies	Norway Spruce	6 – 7' ht	B & B	
PS	7	Pinus Strobus	White Pine	6 – 7' ht	B & B	
SHRUBS						
Bs	7	Buxus sempervirens	Common Boxwood	30 – 36"	B & B	
Ig	6	Ilex Glabra	Inkberry	18 – 24"	C.G.	
Rr	8	Rosa rugosa	Rose bush	24 – 30"	C.G.	

PLANTING NOTES

1. All new plant material shall conform to the minimum guidelines established by the American Standard for Nursery Stock Published by the American Association of Nurserymen, Inc.
2. All new plants to be balled and burlapped or container–grown unless otherwise noted on plant list.
3. Any proposed substitutions of plant species shall be made with plants of equivalent overall form, height, branching habit, flower, leaf, color, fruit and culture, and only as approved by the Owner's Representative.
4. All new plant material for the project shall be of specimen quality unless approved otherwise by Owner's Representative.
5. Where plants size is indicated as a range, the plants provided shall be a fair representation of that range.
6. The Contractor shall supply all new plant material in quantities sufficient to complete the planting shown on the Drawings.
7. Contractor shall obtain plant approval from Owner's Representative after delivery and prior to installation.
8. Lawn Mix:

% BY WEIGHT	SPECIES%	GERMINATION
30%	Tall Fescues	90%
20%	Hybrid Kentucky Blue	87%
50%	Turf–Type Perennial Rye	90%

9. Contractor shall locate and verify all existing utility lines prior to planting and shall report any conflicts to the Owner's Representative.
10. Stake location of all proposed planting for approval by the Owner's Representative prior to the commencement of planting.
11. New plant material shall bear same relationship to finished grade as it bore to previous grade in the nursery.
12. All plant beds to receive three inches (3") of bark mulch on weed barrier fabric or as per Specifications.
13. Prepare all planting beds to minimum overall depths shown on planting details.
14. Amended topsoil backfill shall consist of (1) part manure to (8) parts topsoil and bonemeal @ 20 lbs. to 4 cu. yds. topsoil.
15. All disturbed areas not scheduled for other work shall receive four inches (4") of suitable on–site or imported planting soil prior to seeding or sodding as specified.
16. Contractor shall guarantee all planted materials a minimum of 1 year time.
17. Contractor shall maintain all work including watering, mowing, and protection from traffic until final acceptance of the project.
18. Contractor is responsible to repair or replace all items damaged outside construction limits or disturbed on site which are not part of the identified work of this Contract.
19. Contractor to provide and maintain erosion control measures as shown on the plans and as required in the field. Remove upon stabilization of ground cover.

GRAPHIC SCALE
10 0 5 10 20
1 inch = 10 feet

Approval

Approved under authority of a resolution adopted _____ by the Planning Board of the City of Saratoga Springs.

_____ Chairperson

Date Signed _____

the LA group
Landscape Architecture
and Engineering, PC
40 Long Alley
Saratoga Springs
New York 12866
P 518/587-8100
F 518/587-0180
www.thelagroup.com

Unauthorized alteration or addition to this document is a violation of Section 7209 of the New York State Education Law

© the LA Group 2008

Design MCB
Drawn MCB
Checked CMI

PREPARED FOR:
John-Paul Builders, LLC
796 Burdeck Street
Schenectady, NY 12306

246 WEST AVENUE APARTMENTS

SARATOGA SPRINGS, NY

Title
SITE LANDSCAPE PLAN

Revisions

City #:
Project: 201178
Date: 6/23/2016

Drawing
L-5

Plotted By: MATT BROBSTON
Save Date: 6/23/2016 9:57 AM
File Name: G:\Projects\201178_West_Ave_JMB\2017\CAD\L-5_LAND.dwg

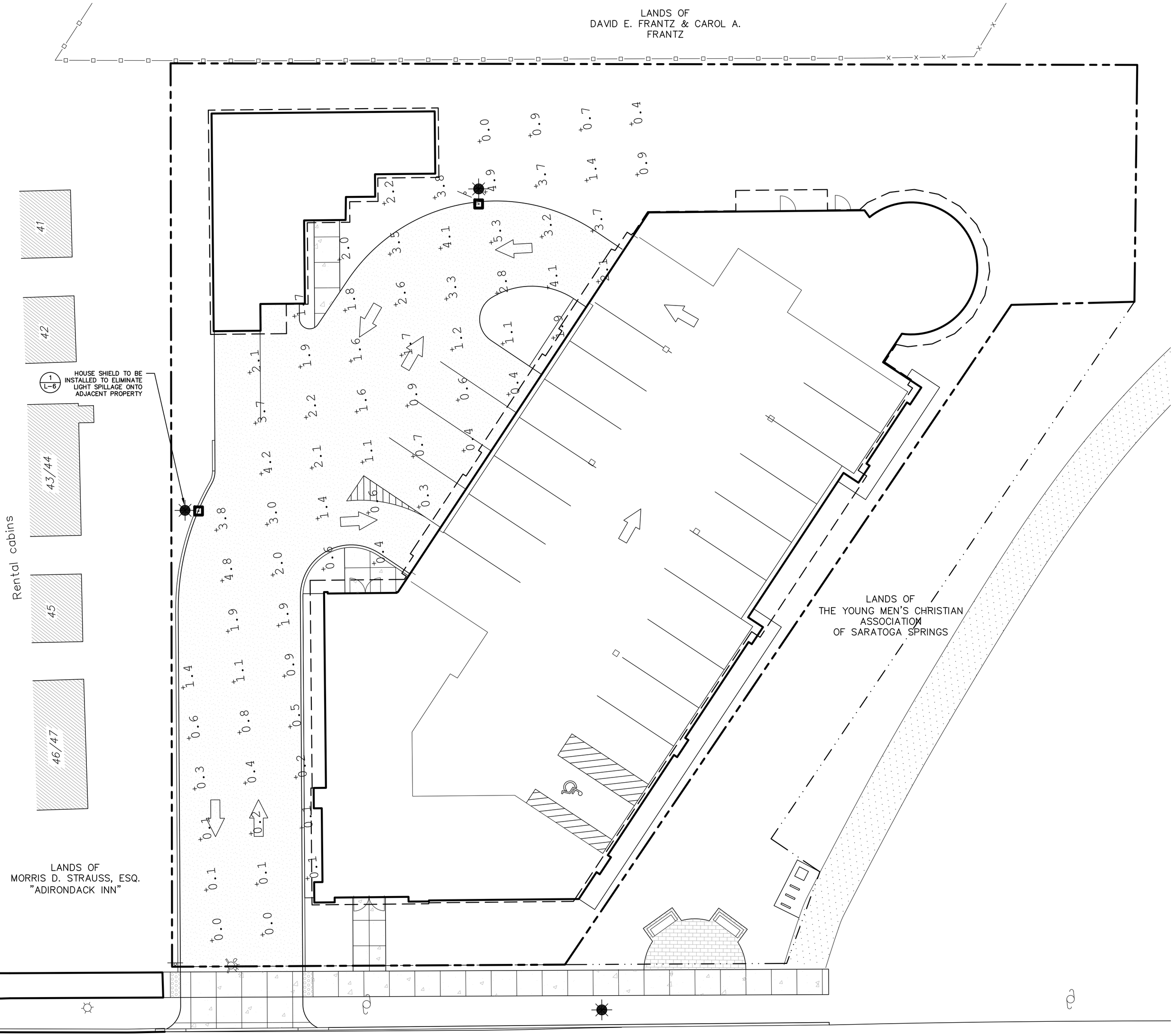

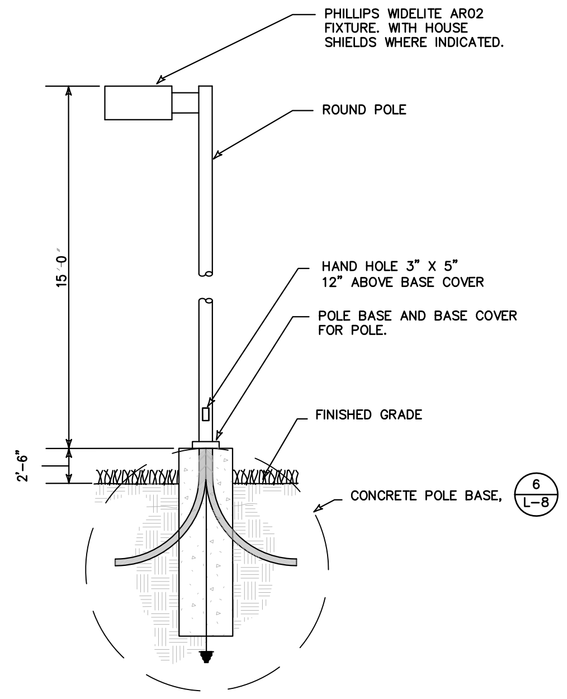

1 PARKING LOT LIGHT POLE DETAIL

SCALE: NTS

GRAPHIC SCALE

10 0 5 10 20

1 inch = 10 feet

Luminaire Schedule						
Symbol	Qty	Label	Arrangement	Total Lamp Lumens	LLF	Description
	2	AR02	SINGLE	13000	0.880	AR02-150H Type 2

Approval

Approved under authority of a resolution adopted _____ by the Planning Board of the City of Saratoga Springs.

_____ Chairperson

Date Signed _____

the LA group
Landscape Architecture and Engineering, PC
40 Long Alley
Saratoga Springs
New York 12866
P 518/587-8100
F 518/587-0180
www.thelagroup.com

Unauthorized alteration or addition to this document is a violation of Section 7209 of the New York State Education Law

© the LA Group 2008

Design MCB

Drawn MCB

Checked CMI

PREPARED FOR:
The PIKE Company, INC.
210 Clifton Corporate Parkway
Clifton Park, NY 12065

246 WEST AVENUE

RESIDENTIAL CONDOMINIUM COMPLEX
SARATOGA SPRINGS, NY

Title SITE LIGHTING PLAN

Revisions
MYLAR CHECK SET 9/28/2012
MYLAR SET NOVEMBER 2012
May 2014

City #: 12.006.1
Project: 201178
Date: 1/25/2012

Drawing L-6

Plotted By: MATT BRIDGESTON
Save Date: 1/16/2012 4:31 PM
File Name: G:\Proj\201\12\201178_West_Ave_246\201178CAD\L-6_LIGHT.dwg

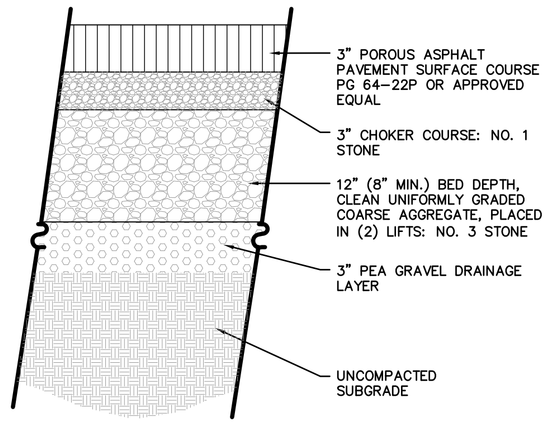

1 POROUS PAVEMENT

N.T.S.

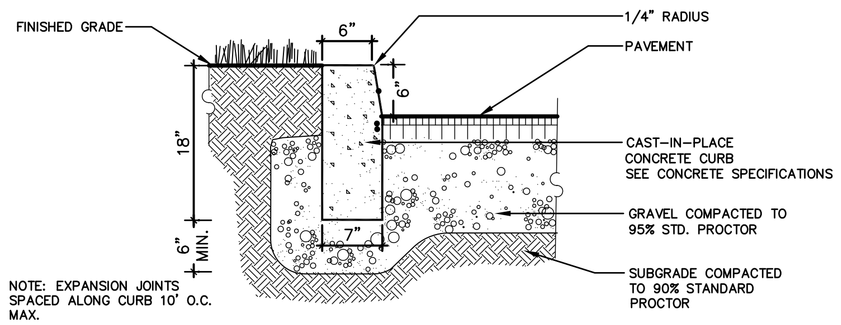

NOTE: EXPANSION JOINTS SPACED ALONG CURB 10' O.C. MAX.

2 CONCRETE CURB DETAIL

N.T.S.

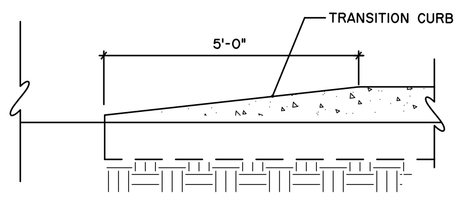

SECTION

3 CURB END TRANSITION DETAIL

N.T.S.

CITY OF SARATOGA SPRINGS

CONCRETE SPECIFICATIONS

THESE GENERAL CONCRETE SPECIFICATIONS SHALL APPLY TO ALL CONCRETE WORK WITHIN THE CITY OF SARATOGA SPRINGS INSTALLED WITHIN A CITY RIGHT-OF-WAY AND/OR WITHIN THE APPROVAL AUTHORITY OF THE PLANNING BOARD.

ALL CONCRETE THAT MAY COME IN CONTACT WITH DEICING CHEMICALS SHALL MEET OR EXCEED THESE MINIMUM SPECIFICATIONS.

CONCRETE SHALL BE ONLY PORTLAND CEMENT CONCRETE AIR-ENTRAINED OF DURABLE MATERIALS AND SHALL HAVE (1) A LOW WATER-CEMENT RATIO (MAXIMUM 0.46), (2) A SLUMP OF 4 INCHES OR LESS.* (3) A CEMENT CONTENT OF 606 LB PER CUBIC YARD OR MORE, (4) PROPER FINISHING AFTER BLEED WATER HAS EVAPORATED FROM THE SURFACE, (5) ADEQUATE DRAINAGE WITH A SLOPE OF 1/8 INCH PER LINEAR FOOT OR MORE, (6) A MINIMUM OF 7 DAYS MOIST CURING AT OR ABOVE 50 DEGREES F, (7) A MINIMUM COMPRESSIVE STRENGTH OF 4000 PSI AT 28 DAYS, AND (8) A MINIMUM 30-DAY DRYING PERIOD AFTER MOIST CURING IF CONCRETE IS PLACED IN THE FALL AND WILL BE EXPOSED TO FREEZE-THAW CYCLES AND DEICERS WHEN SATURATED. THE EXACT LENGTH OF TIME FOR SUFFICIENT DRYING TO TAKE PLACE MAY VARY WITH CLIMATE AND WEATHER CONDITIONS.

TECHNICAL SPECIFICATIONS FOR CONCRETE AS HEREIN DEFINED SHALL COMPLY WITH THE APPLICABLE SPECIFICATIONS OF THE "NEW YORK STATE DEPARTMENT OF TRANSPORTATION STANDARD SPECIFICATIONS CONSTRUCTION AND MATERIALS", 1985.

ANY CLARIFICATION, REVISIONS, MODIFICATIONS THERETO SHALL ONLY BE MADE SUBJECT TO APPROVAL OF THE CITY OF SARATOGA SPRINGS PLANNING BOARD.

*A SUPER PLASTICIZER MAY BE USED TO INCREASE SLUMP AND WORKABILITY WITHOUT INCREASING THE WATER-CEMENT RATIO.

4 CONCRETE SPECIFICATIONS

N.T.S.

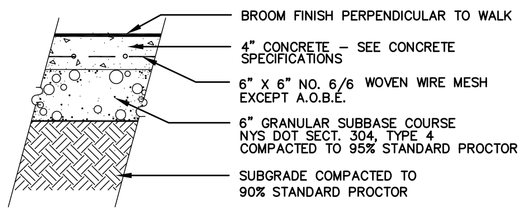

TYPICAL PEDESTRIAN LOADING

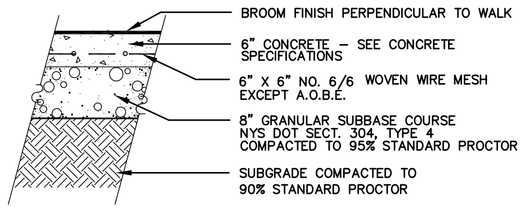

VEHICLE TRAFFIC LOADING

NOTES:

EXPANSION JOINT SPACING - 20'-25' O.C.
CONTROL JOINT SPACING - 5' O.C.
NOMINAL CROSS SLOPE - 1/8" TO 1/4" PER FOOT (MAX. SLOPE 1:50 TYP.) TOWARDS STREET OR A.O.B.E. MAX. SLOPE ALONG THE LENGTH OF

THE WALK SHOULD NOT EXCEED 1:12
CONSTRUCTION JOINT DETAILS TO BE SUBMITTED AND APPROVED BY CITY ENGINEER SIDEWALK WIDTH TO BE 5' MIN. OR AS ORDERED BY CITY ENGINEER

GENERAL DESIGN CRITERIA FOR CONSTRUCTING SIDEWALKS WITHIN SARATOGA SPRINGS RIGHT OF WAYS:

1.) SIDEWALKS MUST BE PLACED IN THE PUBLIC RIGHT OF WAY AT THE PROPERTY LINE.
2.) SIDEWALKS MUST NOT DROP DOWN WHEN CROSSING A DRIVEWAY.
3.) SIDEWALKS MUST NOT EXTEND ACROSS PUBLIC STREETS OR ALLEYS.

GENERAL DESIGN CRITERIA FOR CONSTRUCTING SIDEWALKS WITHIN SARATOGA COUNTY RIGHT OF WAYS WITHIN SARATOGA SPRINGS:

1.) ALL SIDEWALK INSTALLATIONS MUST BE DESIGNED BY A PROFESSIONAL ENGINEER. PLANS MUST BE APPROVED BY THE COUNTY COMM. OF PUBLIC WORKS.
2.) SIDEWALKS MUST BE PLACED ON THE BACK SIDE OF DITCHES OR 8'(MIN.) FROM THE EDGE OF SHOULDER.
3.) SIDEWALKS MUST BE CONSTRUCTED SO AS NOT TO INTERFERE WITH DRAINAGE.

5 CONCRETE PAVEMENT DETAIL

N.T.S.

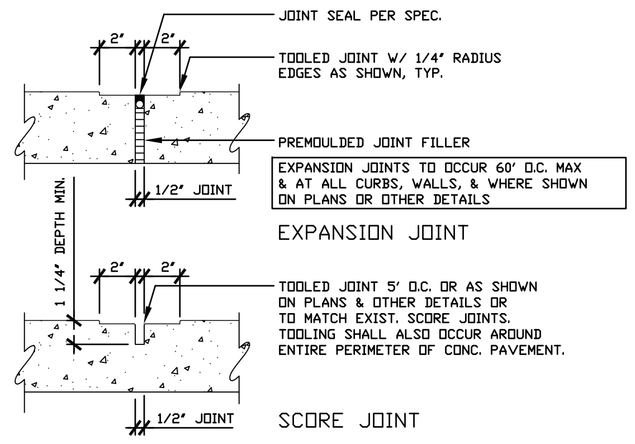

6 CONCRETE PVMT. EXPANSION SCORE JOINT DETAIL

N.T.S.

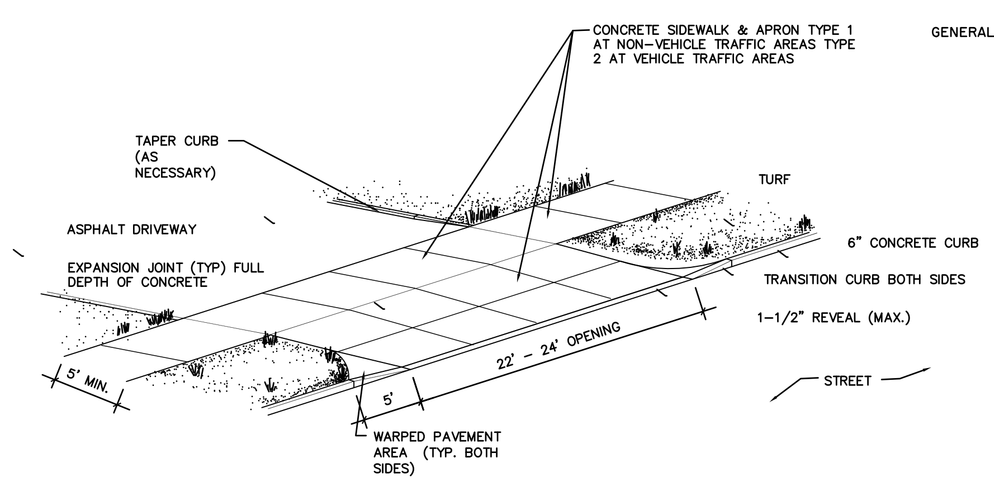

7 COMMERCIAL ENTRANCE DETAIL

N.T.S.

	TEXT	LETTER SIZE	LETTER TYPE	APPROX. SIZE OF SIGN	M.U.T.C.D. NO.
A	STOP	SEE M.U.T.C.D.		30"x30" 6.25 S.F.	R1-1C

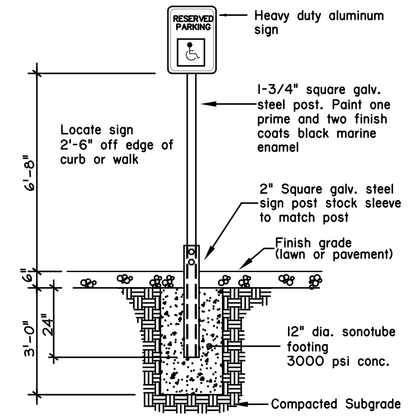

NOTE: OWNER TO APPROVE LOCATIONS PRIOR TO INSTALLATION.

SCHEDULE ELEVATION

8 TRAFFIC SIGN DETAIL / SIGN SCHEDULE

N.T.S.

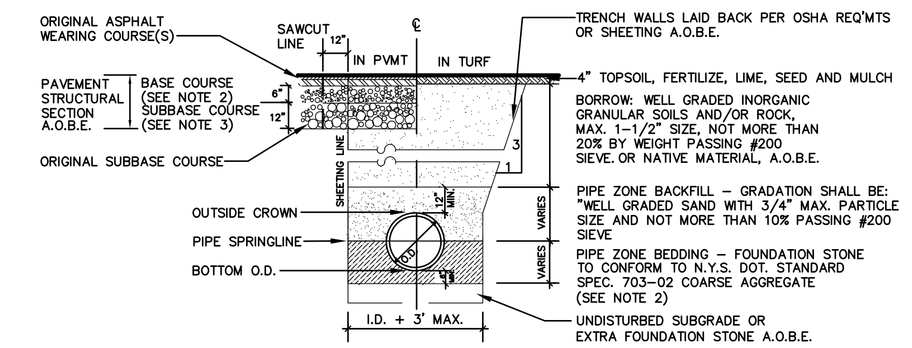

NOTES:

1. STREET OPENING PERMIT IS REQUIRED
2. FOUNDATION STONE - N.Y.S. DOT STD. SPEC. 703-02

   SIZE DETERMINATION #1: 100% PASSING 1" SIEVE, 90-100% PASSING 1/2" SIEVE, 0-15% PASSING 1/4" SIEVE

   OR

   SIZE DETERMINATION #2: 100% PASSING 1-1/2" SIEVE, 90-100% PASSING 1" SIEVE, 0-15% PASSING 1/2" SIEVE.

   GRADATION/SIZE DESIGNATION TO BE DETERMINED BY ENGINEER BASED ON FIELD CONDITIONS.
2. BASE COURSE FOR PAVEMENT: CONFORM TO N.Y.S. DOT STD. 703-02 WITH FOLLOWING MODIFICATIONS:

   2-1/2" SIEVE - PASS 100% BY WEIGHT
   1-3/4" SIEVE - PASS 95-100% BY WEIGHT
   3/4" SIEVE - PASS 60-75%
   1/4" SIEVE - PASS 25-45%
   #40 SIEVE - PASS 10-25%
   #100 SIEVE - PASS 3-12%
3. SUBBASE COURSE FOR PAVEMENT: CONFORM TO N.Y.S. DOT STD. 304-2, TYPE 4.
4. STRUCTURAL PAVEMENT SECTION SHOWN SHALL BE CONSTRUCTED IN LIEU OF PAVEMENT SECTION SHOWN ON DRAWING NO. P-4 A.O.B.E.

9 SANITARY PIPE TRENCH DETAIL

N.T.S.

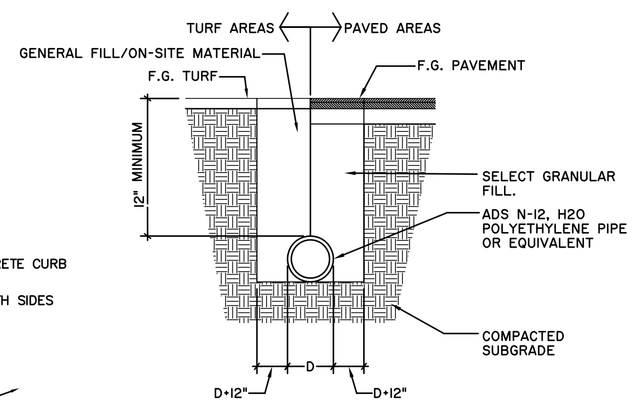

NOTE:
1. ADS N-12, HDPE PIPE REQUIRES A MINIMUM COVER OF 12" IN TRAFFIC AREAS AS PER MANUFACTURER'S SPECIFICATIONS. TO MEET AASHTO H-20 LOAD RATING.

10 PIPE TRENCH (STORM SYSTEM)

N.T.S.

Armor-Tile

Tactile Systems

ENGINEERED PLASTICS, INC.
300 INTERNATIONAL DR., SUITE 100
WILLIAMSVILLE, NY
USA, 14221
1 (800) 682-2525
PHONE: (716) 626-3626
FAX: 1 (800) 769-4463
www.armor-tile.com

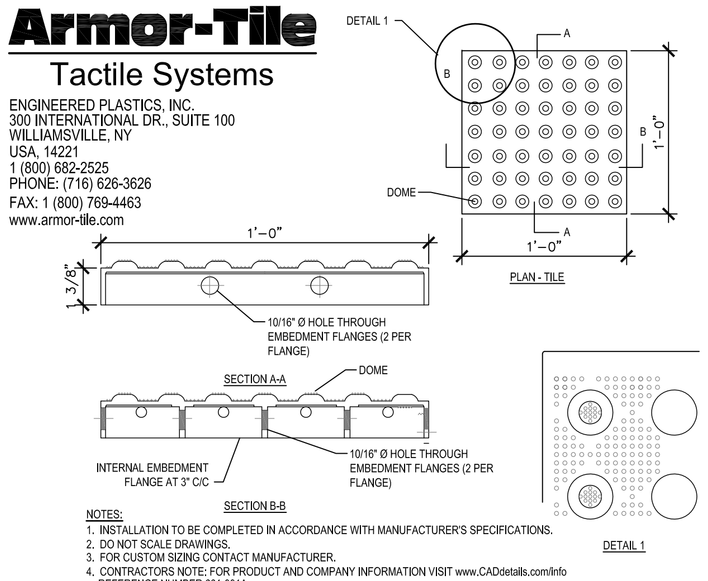

NOTES:
1. INSTALLATION TO BE COMPLETED IN ACCORDANCE WITH MANUFACTURER'S SPECIFICATIONS.
2. DO NOT SCALE DRAWINGS.
3. FOR CUSTOM SIZING CONTACT MANUFACTURER.
4. CONTRACTORS NOTE: FOR PRODUCT AND COMPANY INFORMATION VISIT www.CADdetails.com/info REFERENCE NUMBER 681-001A.

11 TACTILE WARNING STRIP

N.T.S.

Approval

Approved under authority of a resolution adopted _____ by the Planning Board of the City of Saratoga Springs.

_____ Chairperson

Date Signed _____

the LA group
Landscape Architecture and Engineering, PC
40 Long Alley
Saratoga Springs
New York 12866
P 518/587-8100
F 518/587-0180
www.thelagroup.com

Unauthorized alteration or addition to this document is a violation of Section 7209 of the New York State Education Law

© the LA Group 2008

Design MCB
Drawn MCB
Checked CMI

PREPARED FOR:
The PIKE Company, INC.
210 Clifton Corporate Parkway
Clifton Park, NY 12065

246 WEST AVENUE
RESIDENTIAL CONDOMINIUM COMPLEX
SARATOGA SPRINGS, NY

Title SITE DETAILS

Revisions
MYLAR CHECK SET 9/28/2012
MYLAR SET NOVEMBER 2012
May 2014

City #: 12.006.1
Project: 201178
Date: 1/25/2012

Drawing L-7

Plotted By: MATT BROBSTON
Save Date: 11/16/2012 5:11:11 PM
File Name: G:\Projects\201178_West_Ave_246\2011\TRCAD\L7_DETS.dwg

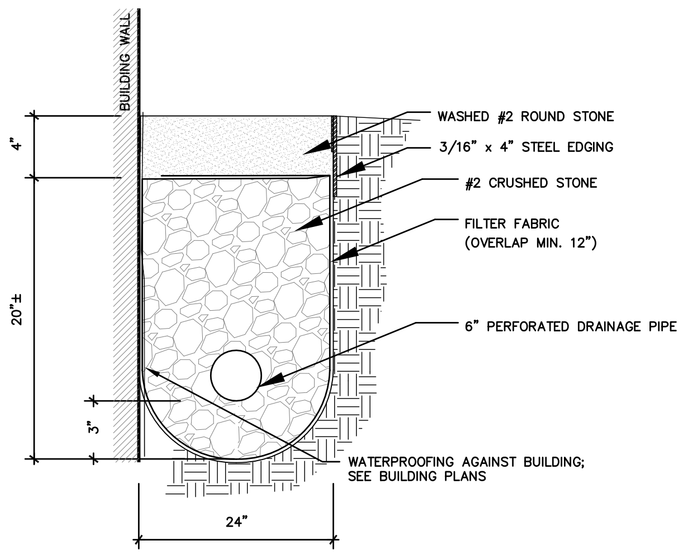

1 PERFORATED DRAINAGE TRENCH DETAIL

N.T.S.

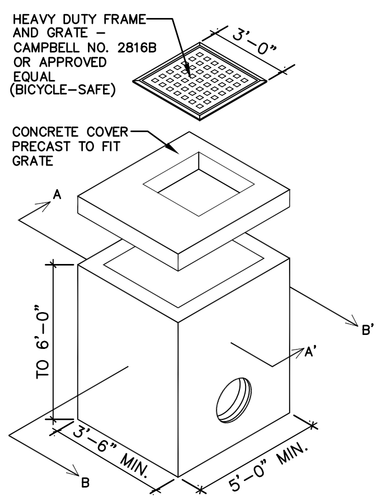

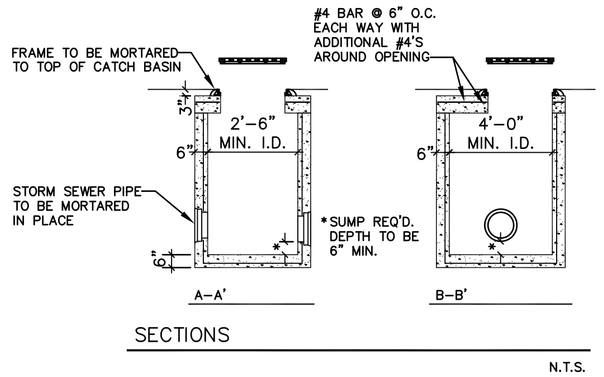

SECTIONS

N.T.S.

CONCRETE – 4000 PSI @ 28 DAYS
MIN. REINFORCMENT – 6x6 – 10/10 WWM
ALL FOUR SIDES AND BOTTOM
(CONFORM TO ASTM STD. A–615)

2 CATCH BASIN DETAIL

N.T.S.

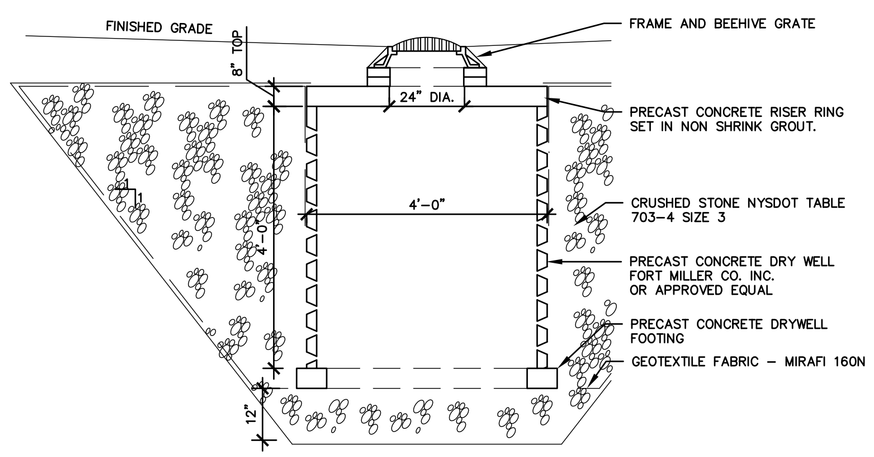

3 DRYWELL DETAIL

N.T.S.

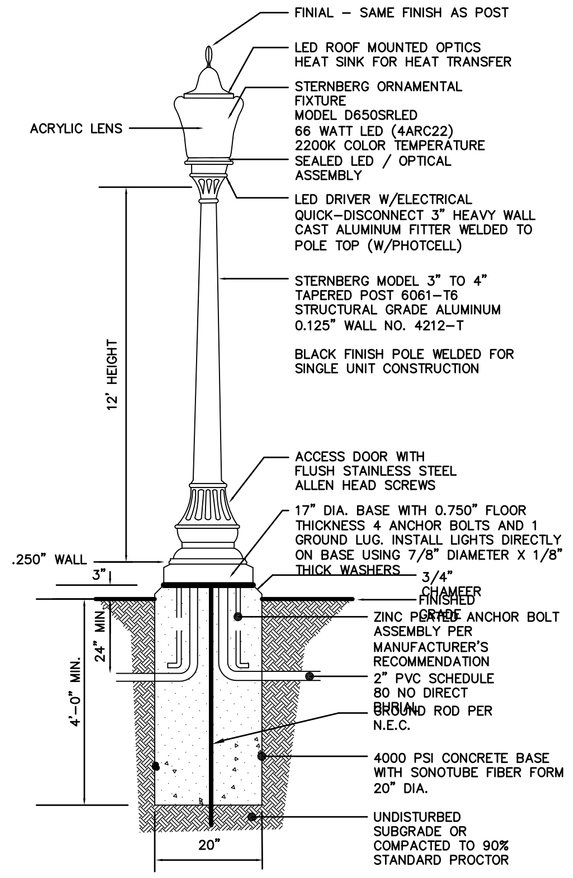

NOTES:

1. INSTALLATION OF DECORATIVE LIGHTS SHALL BE COORDINATED WITH THE CITY ELECTRICIAN AND DEPARTMENT OF PUBLIC WORKS. (USE 120V POWER)
2. THE OWNER/DEVELOPER IS RESPONSIBLE FOR ELECTRIFYING THE SYSTEM AND PAYING THE ELECTRIC BILLS UNTIL ACCEPTED AND TAKEN OVER BY THE CITY OF SARATOGA SPRINGS.
3. ELECTRIC SERVICE: SWEEPS AT CONCRETE BASES AND BETWEEN BASES USE 2" SCHEDULE 40 PVC NON–METALLIC CONDUIT, UNLESS UNDER DRIVEWAYS WHERE SCHEDULE 80 PVC IS REQUIRED. FOR WIRE: THHN COPPER STRANDED NUMBER 6 COLORED RED, WHITE, AND GREEN. LIGHTS ARE WIRED 120 VOLTS. PROVIDE A SEPARATE HANDHOLD, SYNERTECH SYN12121PH02, TO BE OWNED BY THE CITY FOR THE DISCONNECT NEAR THE BASE OF THE ELECTRIC POLE OR BOX AT THE BEGINNING OF SERVICE. PROVIDE AND INSTALL (1) 5/8 INCH COPPER GROUND ROD IN HANDHOLE. WIRE AND CONDUIT FROM HANDHOLE TO POLE OR BOX PER NATIONAL GRIDS'S STANDARDS. IF CONNECTING ONLY ONE LIGHT PROVIDE WATERTIGHT FUSEHOLDER, FERRAZ SHAWMUT FEB–21–21 1P 600V WITH 5 AMP FUSE WITH INSULATOR BOOTS PART FRZ FSB1 IN HANDHOLE FOR FUSING THE POWER WIRE. IF CONNECTING MORE THAN ONE LIGHT PUT A 30 AMP FUSE IN WATERTIGHT FUSEHOLDER IN HANDHOLD AND PROVIDE SEPARATATE FUSE HOLDERS, BUSSMAN HEB–AA FUSEHOLDER WITH 5 AMP FUSE, IN BASE OF EACH LAMP. RUN #12 THHN COPPER, (RED WHITE AND GREEN) FROM BASE TO TOP OF LIGHT USE POLARIS CONNECTORS FOR CONNECTIONS IN HANDHOLE AND IN BASE OF LIGHTS. THE LIGHT IS TO BE MOUNTED DIRECTLY ONTO CONCRETE BASE USING FENDER WASHERS. 2 INCH OD 1/2 INCH ID AND 1/8 INCH THICKNESS AND LOCK WASHERS

4 DECORATIVE STREET LIGHT DETAIL

N.T.S.

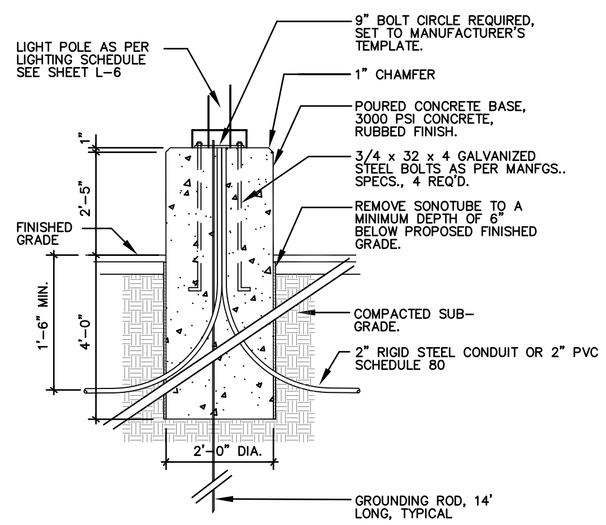

6 LIGHT POLE BASE – PEDESTAL DETAIL

N.T.S.

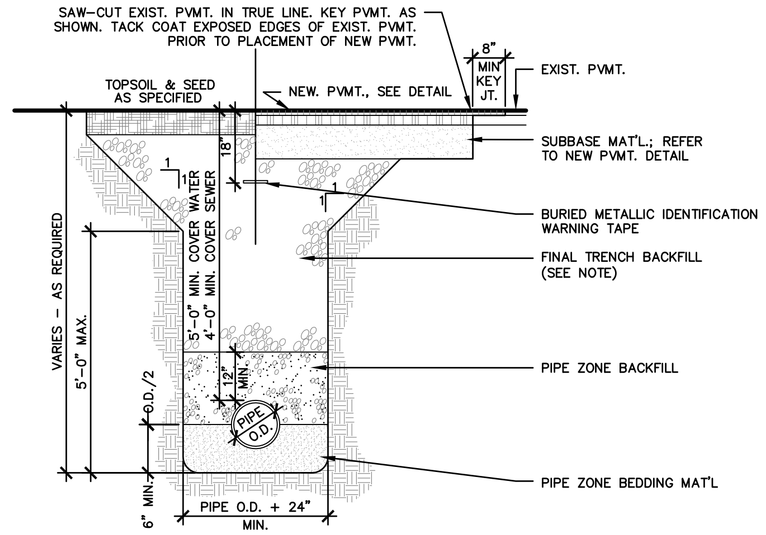

ITEM	DEPTH	MATERIAL	NYSDOT TYPE	METHOD OF PLACEMENT
PIPE ZONE BEDDING	6" MIN.	ANGULAR CRUSHED STONE	1&2	MECHANICAL COMPACTION
PIPE ZONE BACKFILL	12" MIN. COVER	CLEAN SAND OR GRAVEL	1A OR 1	MECHANICAL COMPACTION
FINAL TRENCH BACKFILL	VARIES	SEE NOTE	SEE NOTE	MECHNANICAL COMPACTION

NOTES:
1. FINAL TRENCH BACKFILL
   1.a. IN NON–PAVED AREAS, FINAL TRENCH BACKFILL SHALL BE EXCAVATED MATERIAL WHEN DETERMINED SUITABLE BY THE ENGINEER OF RECORD; OTHERWISE IT SHALL BE NYSDOT TYPE 1 (ITEM NO. 304.02). MIN. MOD. PROCTOR DENSITY SHALL BE 85 PERCENT.
   1.b. IN PAVED AREAS, FINAL TRENCH BACKFILL SHALL BE NYSDOT TYPE 1 (ITEM NO. 304.02). MIN. MODIFIED PROCTOR DENSITY SHALL BE 95 PERCENT.
2. ALL PIPE ZONE BEDDING, PIPE ZONE BACKFILL, AND FINAL TRENCH BACKFILL SHALL BE PLACED IN 6 INCH MAX. COMPACTED LIFTS. ALL BEDDING AND BACKFILL MATERIALS SHALL BE MECHANICALLY COMPACTED TO THE SATISFACTION OF THE ENGINEER.
3. EXCAVATION SHALL BE KEPT DRY AND DEWATERED AT ALL TIMES.

7 PIPE TRENCH-SECTION

SCALE: NTS

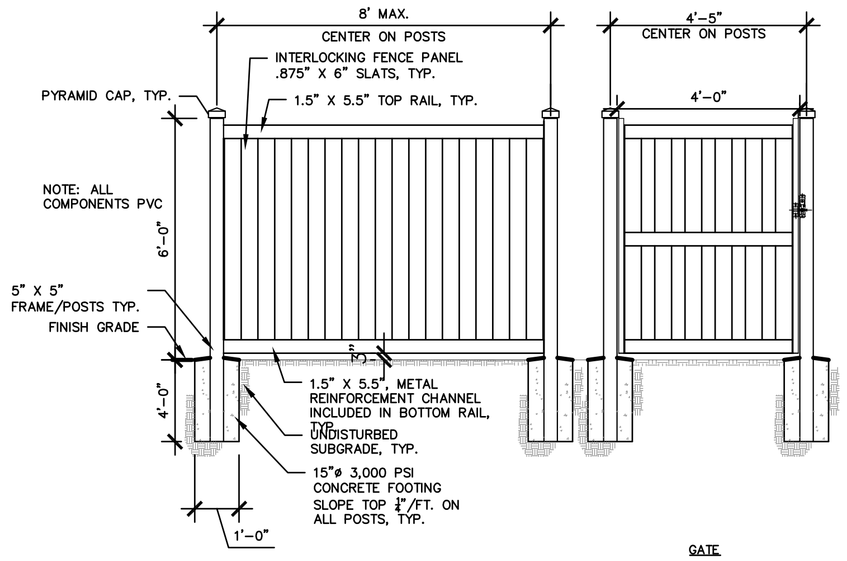

8 DUMPSTER PAD ENCLOSURE

SCALE: NTS

Approval

Approved under authority of a resolution adopted
by the Planning Board of the City of Saratoga Springs.

Chairperson

Date Signed

the LA group
Landscape Architecture
and Engineering, PC
40 Long Alley
Saratoga Springs
New York 12866
P 518/587-8100
F 518/587-0180
www.thelagroup.com

Unauthorized alteration or addition to this document is a violation of Section 7209 of the New York State Education Law

© the LA Group 2008

Design MCB
Drawn MCB
Checked CMI

PREPARED FOR:
John-Paul Builders, LLC
796 Burdeck Street
Schenectady, NY 12306

246 WEST AVENUE APARTMENTS

SARATOGA SPRINGS, NY

Title SITE DETAILS

Revisions

City #:
Project: 201178
Date: 6/23/2016

Drawing L-8

Plotted By: MATT BRIDBSTON
Save Date: 6/23/2016 10:10 AM
File Name: G:\Projects\1501\15_West_Ave_246\2015TRCADs\Z_DETS.dwg

NOTES:

MAINS SHALL BE VALVED TO INSURE THAT WATER FLOW IS NOT INTERRUPTED TO MORE THAN TWO HYDRANTS AT ANY GIVEN TIME.

ALL HYDRANTS AND VALVES SHALL OPEN RIGHT.

PAINT SCHEDULE:

SIZE OF MAIN	COLOR OF BONNET AND CONNECTOR COVERS	COLOR OF BARREL
6"	BLUE	YELLOW
8"	GREEN, FOREST	YELLOW
10"	BROWN	YELLOW
12"	GRAY, BATTLESHIP	YELLOW
14"	GREEN, LIGHT	YELLOW
16"	ORANGE	YELLOW
20"	BLACK	YELLOW
24"	YELLOW	YELLOW

1 FIRE HYDRANT DETAIL

N.T.S.

NOTE:
RETAINING GLANDS ACCEPTABLE FOR USE AS APPROVED BY CITY ENGINEER.

NOTES:
1. FOR REQUIRED BEARING AREA AND DIMENSIONS L & D, SEE SCHEDULE BELOW. VALUES OF L & D OTHER THAN THOSE SHOWN IN THE TABLE MAY BE USED PROVIDED THEY YIELD A BEARING AREA EQUAL TO OR LARGER THAN REQUIRED.
2. CONC. NOT TO OVERLAP ANY JOINT.
3. CONCRETE TO BE PLACED SO AS NOT TO INTERFERE W/ REMOVING OR INSTALLING ANY OF THE JOINTING HARDWARE.
4. BEARING AREAS FOR THRUST BLOCKS FOR WATER MAINS LARGER THAN 12" DIA. TO BE APPROVED BY CITY ENGINEER.
5. APPROXIMATE VOLUME OF CONCRETE THRUST BLOCK:

$$V\pm = \frac{LD\,(W + I.D.) - I.D.}{81}$$

WHERE:
V = VOLUME IN CUBIC YARDS
L = LENGTH OF BLOCK IN FEET
D = DEPTH OF BLOCK IN FEET
W = WIDTH OF BLOCK IN FEET
I.D. = INSIDE DIAMETER OF PIPE IN FEET

6. REQUIRED BEARING AREAS ARE BASED ON ALLOWABLE SOIL BEARING CAPACITY OF 2000 p.s.i. W/ A SAFETY FACTOR OF 1.7. PRESSURE OF FLUID FLOW IS BASED ON A 300' HEAD.
7. IN MUCK, PEAT OR RECENTLY PLACED FILL ALL THRUST SHALL BE RESISTED BY PILES OR TIE RODS TO SOLID FOUNDATIONS, OR BY REMOVAL OR SUCH UNSTABLE MATERIAL & REPLACEMENT W/ BALLAST OF SUFFICIENT STABILITY TO RESIST THRUSTS, ALL AS REQUIRED BY THE ENGINEER.

REQUIRED BEARING AREAS & DIMENSIONS FOR CONCRETE THRUST BLOCKS

PIPE SIZE INCHES	TEE AREA SQ. FT.	TEE DIMENSIONS D x L	90° (1/4) BEND AREA SQ. FT.	90° (1/4) BEND DIMENSIONS D x L	45° (1/8) BEND AREA SQ. FT.	45° (1/8) BEND DIMENSIONS D x L	22-1/2° (1/16) BEND AREA SQ. FT.	22-1/2° (1/16) BEND DIMENSIONS D x L	11-1/4° (1/32) BEND AREA SQ. FT.	11-1/4° (1/32) BEND DIMENSIONS D x L
6	4.21	1.8 x 2.5	5.96	2.0 x 3.0	3.22	1.5 x 2.3	1.65	1.3 x 1.5	0.83	0.83 x 1.3
8	7.24	2.5 x 3.0	10.24	2.8 x 3.8	5.54	2.3 x 2.5	2.82	1.5 x 1.5	1.42	1.0 x 1.5
10	10.89	2.8 x 4.0	15.40	3.3 x 4.8	8.33	2.5 x 3.5	4.25	1.8 X 2.5	2.14	1.3 x 2.0
12	12.40	3.5 x 4.5	21.77	4.5 x 5.0	11.78	3.0 x 4.0	6.01	2.3 x 2.8	3.02	1.5 x 2.3
16	26.75	4.8 x 5.8	37.83	5.8 x 6.8	20.48	4.0 x 5.3	10.44	2.8 x 4.0	5.25	2.3 x 2.5

NOTES:
1. VALUES FOR TEES APPLY TO TEES, END PLUGS, CAPS, AND TAPPING SLEEVES.
2. MINIMUM REQUIRED BEARING AREAS ARE DUE TO THRUSTS CAUSED BY 150 P.S.I. WORKING PRESSURE PLUS 50% (75 P.S.I) SURGE ALLOWANCE RESULTING IN 225 P.S.I. INTERNAL PRESSURE.
3. REQUIRED BEARING AREAS ARE BASED ON ALLOWABLE SOIL BEARING CAPACITY OF 2000 POUNDS PER SQUARE FOOT FOR SAND. DUE TO OTHER SOIL CONDITIONS WHICH MAY BE ENCOUNTED DURING THE WORK, THRUST BLOCK BEARING AREAS MAY BE MODIFIED BY THE ENGINEER OF RECORD BY MULTIPLYING THE MINIMUM REQUIRED BEARING AREA GIVEN IN THE TABLE ABOVE FOR THE APPROPRIATE PIPE SIZE AND FITTING BY THE CORRECTION FACTORS BELOW. THE CONTRACTOR SHALL NOTIFY THE ENGINEER CONCERNING ENCOUNTERED SOIL CONDITIONS WHICH ARE NOT SAND. THE CONTRACTOR SHALL NOT MODIFY THE REQUIRED THRUST BLOCK SIZES WITHOUT THE ENGINEER'S WRITTEN APPROVAL.

INSITU SOIL CONDITION	ALLOWABLE SOIL PRESSURE (LBS./SQ.FT.)	CORRECTION FACTOR
SOFT CLAY	1000	2.00
SAND	2000	1.00
SAND & GRAVEL	3000	0.67
CEMENTED W/CLAY	4000	0.50
HARD SHALE	10,000	0.20

4. IN MUCK, PEAT, OR RECENTLY PLACED FILL ALL THRUSTS SHALL BE RESISTED BY STEEL PILES OR TIE ROD ANCHORAGE TO SOLID APPROVED FOUNDATIONS, OR BY REMOVAL OF SUCH UNSTABLE MATERIAL AND REPLACEMENT WITH BALLAST OF SUFFICIENT STABILITY TO RESIST THE THRUSTS, ALL AS REQUIRED BY THE ENGINEER. ALL PROPOSED PILE CONFIGURATIONS THE CONTRACTOR WISHES TO UTILIZE IN THE WORK SHALL BE DESIGNED AND CERTIFIED BY A QUALIFIED NEW YORK STATE LICENSED PROFESSIONAL ENGINEER HIRED BY THE CONTRACTOR. THE COST OF SAID PROFESSIONAL ENGINEERING SERVICES SHALL BE PAID BY THE CONTRACTOR AT NO ADDITIONAL COST TO THE OWNER. ALL PILE CONFIGURATIONS AND RESPECTIVE ENGINEERING COMPUTATIONS (AND ANY OTHER SUPPORTING DOCUMENTATION AS DEEMED NECESSARY BY THE ENGINEER OF RECORD), AS PROPOSED BY THE CONTRACTOR, SHALL BE SUBMITTED TO THE ENGINEER OF RECORD FOR CONTENT REVIEW AND COMMENT; ALL SUBMITTALS SHALL DEPICT A SIGNED AND DATED LICENSED PROFESSIONAL ENGINEER'S SEAL BELONGING TO THE ENGINEER HIRED BY THE CONTRACTOR.
5. ALL CAST-IN-PLACE CONCRETE THRUST BLOCKS SHALL BE CONSTRUCTED OF 3,000 PSI MINIMUM CONCRETE HAVING A MAXIMUM WATER-TO-CEMENT RATIO OF 0.44, A MINIMUM CEMENT CONTENT OF 630 POUNDS PER CUBIC YARD AND A MAXIMUM SLUMP OF 4 INCHES AT POINT OF PLACEMENT. ALL CONCRETE THRUST BLOCKS SHALL BEAR AGAINST UNEXCAVATED/UNDISTURBED VIRGIN SOIL OF THE PIPE TRENCH VERTICAL WALL. ALL THRUST BLOCK BEARING AREAS SHALL BE BASED ON THE ACTUAL CONTACT AREA OF THE THRUST BLOCK AGAINST THE VERTICAL TRENCH FACE; CONTACT AREAS OF THRUST BLOCKS AGAINST SLOPED TRENCH WALL FACES WILL NOT UTILIZED IN COMPUTING CONTACT AREAS.
6. CONCRETE UTILIZED FOR CONSTRUCTING THRUST BLOCKS SHALL NOT OVERLAP ANY PIPE JOINT, FITTING/PIPE JOINT, MECHANICAL JOINT RETAINER GLAND AND FERROUS-BASED RESTRAINT ANCHORAGE ASSEMBLIES.
7. CONCRETE THRUST BLOCKS SHALL BE PLACED IN SUCH A MANNER SO AS NOT TO INTERFERE WITH ANY FUTURE REMOVAL AND/OR MAINTENANCE OF FITTING RESTRAINT HARDWARE. ALL PIPE FITTINGS RECEIVING CONCRETE THRUST BLOCKS SHALL BE WRAPPED WITH 6-MIL MINIMUM POLYETHALENE PLASTIC SHEETS TO PREVENT CONCRETE BONDING TO FERROUS FITTINGS AND RESTRAINT HARDWARE.
8. CONCRETE THRUST BLOCKS SHALL BE PLACED IN SUCH A MANNER SO AS NOT TO BEAR UPON NEW AND EXISTING CONSTRUCTIONS, AND ANY AND ALL UNDERGROUND UTILITIES WHICH MAY OR MAY NOT BE IMPACTED UPON DUE TO IMPARTED WATER MAIN THRUSTS; NO THRUST BLOCK SHALL BE PLACED WHEN THERE IS NOT AT LEAST A 10 FOOT MINIMUM SEPARATION BETWEEN THE REAR OF THE THRUST BLOCK AND AN EXISTING UNDERGROUND UTILITY, UNLESS WRITTEN APPROVAL IS RECEIVED FROM BOTH THE UTILITY OWNER AND THE ENGINEER.

2 THRUST BLOCK DETAILS/NOTES

N.T.S.

NOTE:
(REFERENCE- "TEN STATE STANDARDS")
WHEN INSTALLED PARALLEL, ALL WATER AND SEWER LINES SHALL HAVE A MINIMUM SEPARATION OF 10', EDGE TO EDGE. IF MINIMUM CANNOT BE MAINTAINED, WATER MAIN SHALL BE IN SEPARATE TRENCH OR ON AN UNDISTURBED EARTH SHELF TO ONE SIDE OF SEWER, WITH BOTTOM OF WATER MAIN 18" MINIMUM ABOVE TOP OF SEWER PIPE. WHEN CROSSING, MAINS SHALL BE INSTALLED TO INSURE 18" MINIMUM VERTICAL SEPARATION BETWEEN PIPES, OUTSIDE TO OUTSIDE. WHERE WATER MAIN IS UNDERNEATH SEWER, ADEQUATE STRUCTURAL SUPPORT SHALL BE PROVIDED FOR THE SEWER TO PREVENT DAMAGE TO WATER MAIN. WHEN IT IS IMPOSSIBLE TO PROVIDE THE ABOVE MINIMUMS, THE SEWER SHALL BE DESIGNED AND CONSTRUCTED EQUAL TO WATER PIPE, AND SHALL BE PRESSURE TESTED TO ASSURE WATERTIGHTNESS PRIOR TO BACKFILLING.

3 UTILITY CROSSING DETAIL

N.T.S.

4 CONN. TO EXISTING WATER MAIN DETAIL

N.T.S.

5 NEW WATER MAIN VALVE INSTALLATION DETAIL

N.T.S.

Approval

Approved under authority of a resolution adopted ______ by the Planning Board of the City of Saratoga Springs.

______ Chairperson

Date Signed ______

the LA group
Landscape Architecture and Engineering, PC
40 Long Alley
Saratoga Springs
New York 12866
P 518/587-8100
F 518/587-0180
www.thelagroup.com

Unauthorized alteration or addition to this document is a violation of Section 7209 of the New York State Education Law

© the LA Group 2008

Design MCB
Drawn MCB
Checked CMI

PREPARED FOR:
The PIKE Company, INC.
210 Clifton Corporate Parkway
Clifton Park, NY 12065

246 WEST AVENUE

RESIDENTIAL CONDOMINIUM COMPLEX
SARATOGA SPRINGS, NY

Title
SITE DETAILS

Revisions
MYLAR CHECK SET 9/28/2012
MYLAR SET NOVEMBER 2012
May 2014

City #: 12.006.1
Project: 201178
Date: 1/25/2012

Drawing
L-9

Plotted By: MATT BROBSTON
Save Date: 11/16/2012 5:11 PM
File Name: G:\Proj-2011\201178_West_Ave_246\201178CAD\L-7_DETS.dwg

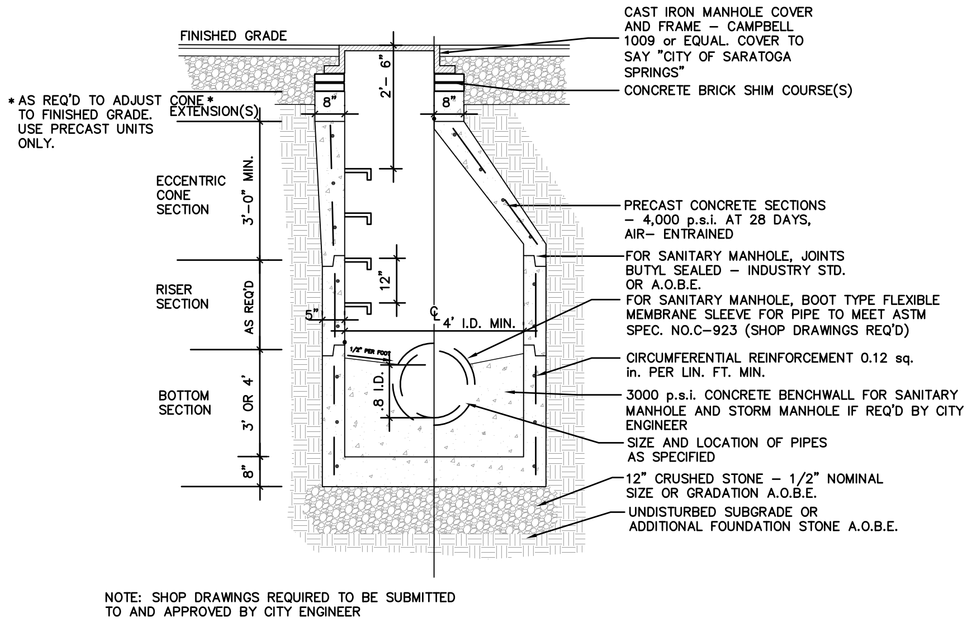

NOTE: SHOP DRAWINGS REQUIRED TO BE SUBMITTED TO AND APPROVED BY CITY ENGINEER

1 SANITARY SEWER MANHOLE DETAIL

N.T.S.

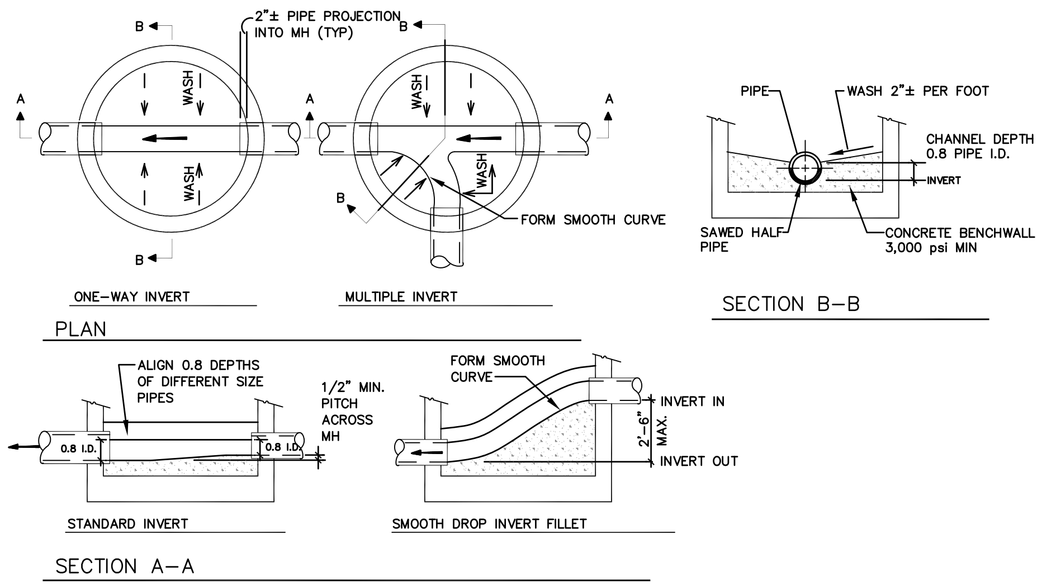

2 MANHOLE BENCH DETAIL

N.T.S.

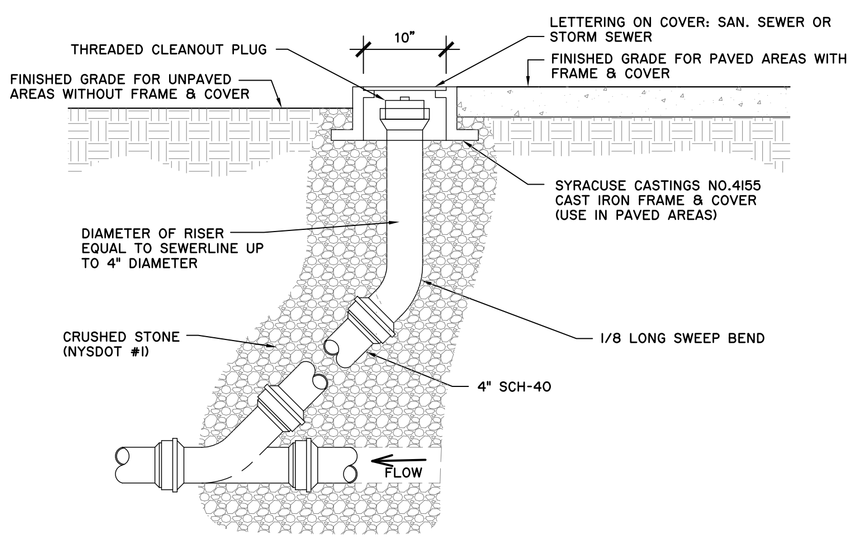

3 SANITARY SEWER CLEANOUT DETAIL

N.T.S.

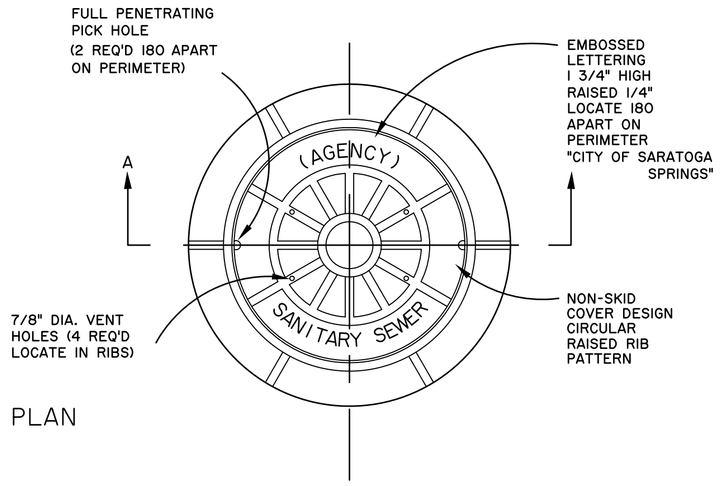

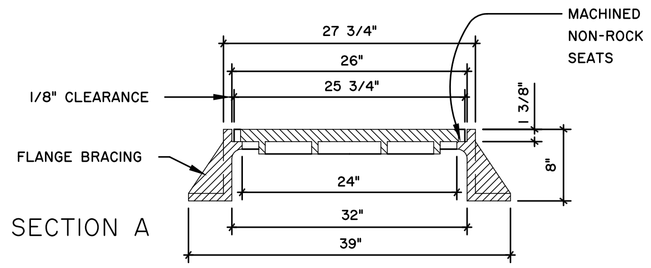

NOTE:
1) FRAME AND COVER SHALL CONFORM TO A.S.T.M. A536 (DUCTILE IRON) AND SAFELY WITHSTAND A.A.S.H.T.O. H520-44 HIGHWAY LOADING
2) FRAME AND COVER SHALL RECEIVE FACTORY APPLIED BITMASTIC COATING

4 SANITARY MANHOLE FRAME AND COVER DETAIL

N.T.S.

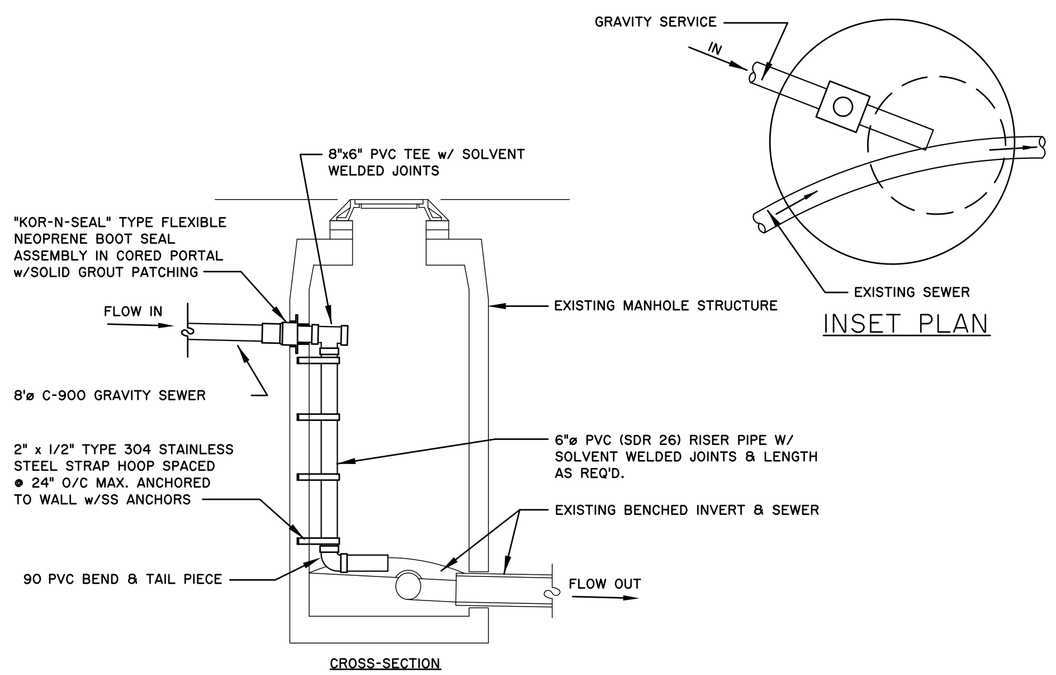

NOTES:
1) WORK EXCAVATION SHALL BE KEPT DRY AND DEWATERED AT ALL TIMES
2) EXCAVATION, BACKFILL, AND RESTORATION WITHIN HIGHWAY R.O.W. IN ACCORDANCE WITH NYSDOT SPECIFICATIONS
3) CONNECTION MATERIALS & METHODS IN ACCORDANCE WITH S.C.S.D. #1 SPECIFICATIONS.

5 SANITARY DROP @ EXISTING MANHOLE

N.T.S.

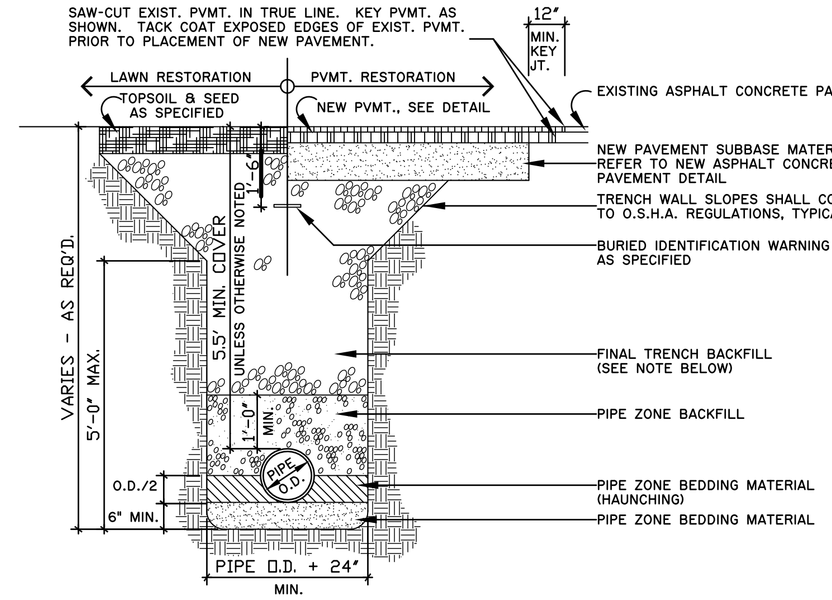

ITEM	DEPTH	MATERIAL	NYSDOT TYPE AGGREGATE	METHOD OF PLACEMENT
PIPE ZONE BEDDING (ENCOUNTERED DRY COND.)	6" MIN.	CRUSHED STONE	1	MECHANICAL COMPACTION
PIPE ZONE BEDDING (HAUNCHING/ ENCOUNTERED WET CONDITION)	6" MIN.	CRUSHED STONE	2	MECHANICAL COMPACTION
PIPE ZONE BEDDING (HAUNCHING)	PIPE O.D./2	CRUSHED STONE	1	MECHANICAL COMPACTION
PIPE ZONE BACKFILL	12" MIN. COVER	CRUSHED STONE	1	MECHANICAL COMPACTION
FINAL TRENCH BACKFILL	VARIES	SEE NOTE	SEE NOTE	MECHNANICAL COMPACTION

NOTES:
1) FINAL TRENCH BACKFILL
   a) IN NON-PAVED AREAS, FINAL TRENCH BACKFILL SHALL BE EXCAVATED MATERIAL WHEN DETERMINED SUITABLE BY THE ENGINEER OF RECORD, OTHERWISE IT SHALL BE NYSDOT TYPE 1 (ITEM NO. 304.02). MIN. MOD. PROCTOR DENSITY SHALL BE 90 PERCENT.
   b) IN PAVED AREAS, FINAL TRENCH BACKFILL SHALL BE NYSDOT TYPE 2 (ITEM NO. 304.03). MIN. MODIFIED PROCTOR DENSITY SHALL BE 95 PERCENT.
2) ALL PIPE ZONE BEDDING, PIPE ZONE BACKFILL, AND FINAL TRENCH BACKFILL SHALL BE PLACED IN 6 INCH MAXIMUM, COMPACTED LIFTS. ALL BEDDING AND BACKFILL MATERIALS SHALL BE MECHANICALLY COMPACTED TO THE SATISFACTION OF THE ENGINEER.
3) EXCAVATION SHALL BE KEPT DRY AND DEWATERED AT ALL TIMES DURING TRENCHING OPERATIONS.
4) ALL PAVEMENT SAWCUTS SHALL BE IN SOUND EXISTING PAVEMENT ACCEPTABLE TO THE ENGINEER.

6 TYPICAL WATER PIPE TRENCH DETAIL

N.T.S.

Approval

Approved under authority of a resolution adopted _____ by the Planning Board of the City of Saratoga Springs.

_____ Chairperson

Date Signed _____

the LA group
Landscape Architecture and Engineering, PC
40 Long Alley
Saratoga Springs
New York 12866
P 518/587-8100
F 518/587-0180
www.thelagroup.com

Unauthorized alteration or addition to this document is a violation of Section 7209 of the New York State Education Law

© the LA Group 2008

Design MCB
Drawn MCB
Checked CMI

PREPARED FOR:
The PIKE Company, INC.
210 Clifton Corporate Parkway
Clifton Park, NY 12065

246 WEST AVENUE
RESIDENTIAL CONDOMINIUM COMPLEX
SARATOGA SPRINGS, NY

Title
SITE DETAILS

Revisions
MYLAR CHECK SET 9/28/2012
MYLAR SET NOVEMBER 2012
May 2014

City #: 12.006.1
Project: 201178
Date: 1/25/2012

Drawing
L-10

Plotted By: MATT BRIDGETON
Save Date: 11/16/2012 5:11 PM
File Name: G:\PROJECTS\201178_West_Ave_246\2011780ADfs\7_DETS.dwg

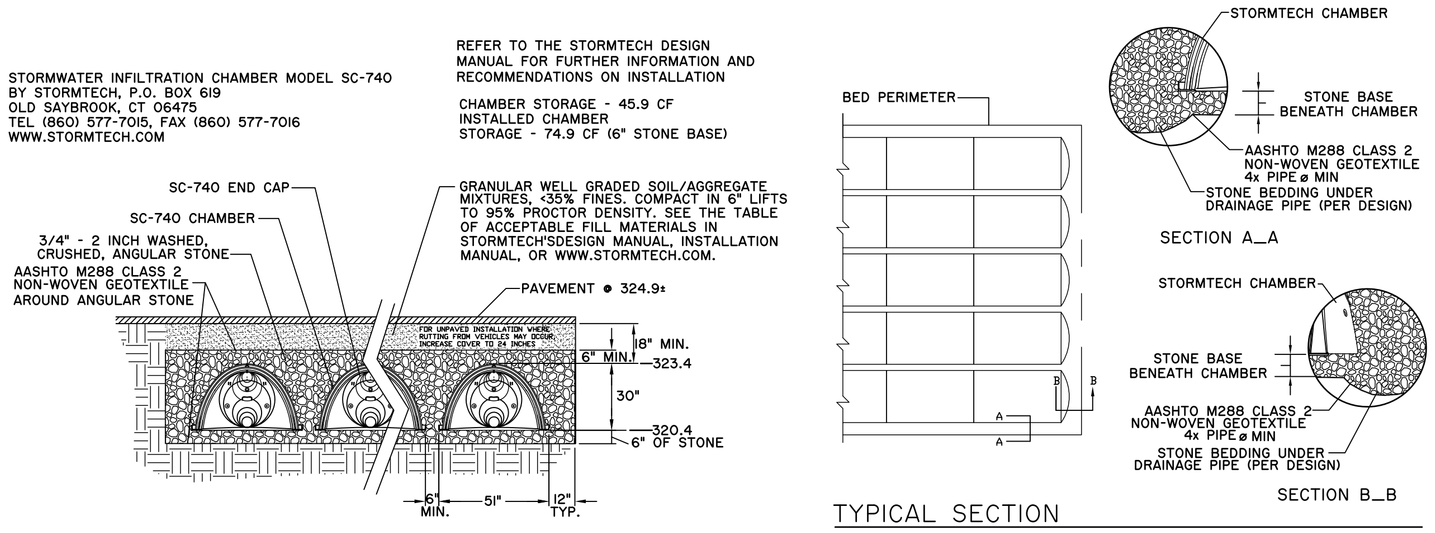

1 STORMWATER INFILTRATION CHAMBER DETAIL

N.T.S.

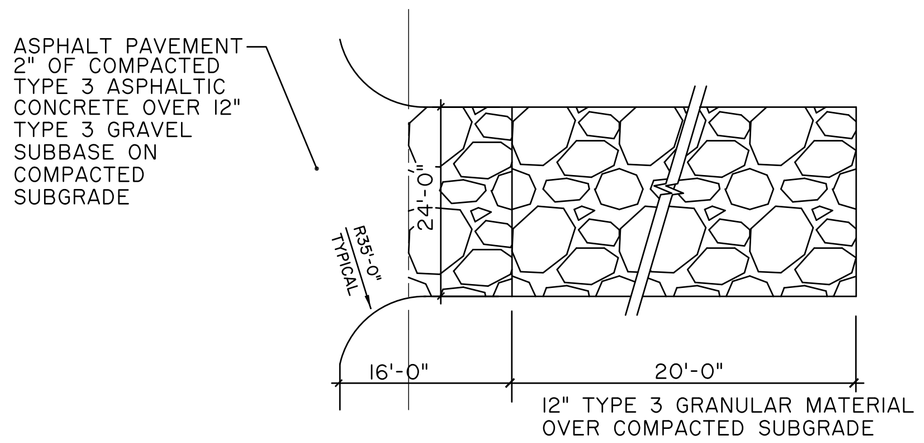

2 STABILIZED CONSTRUCTION ACCESS

N.T.S.

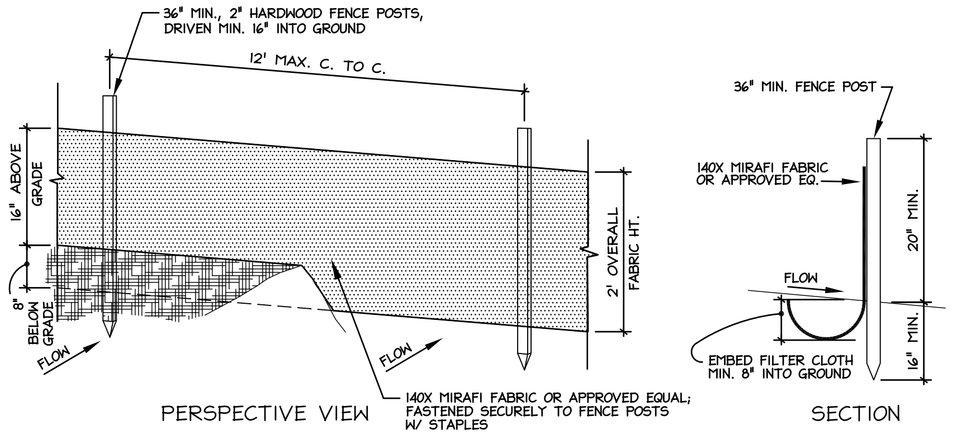

3 SILT FENCE DETAIL

N.T.S.

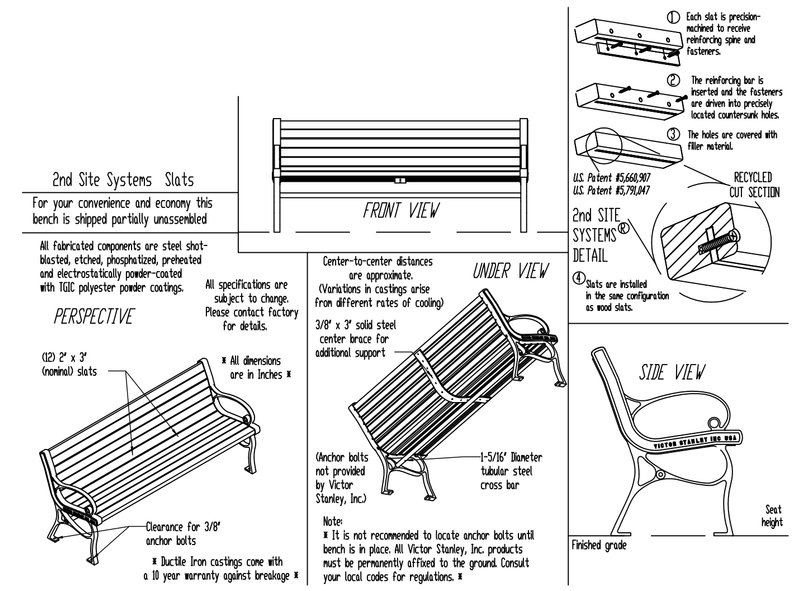

4 6' BENCH DETAIL

N.T.S.

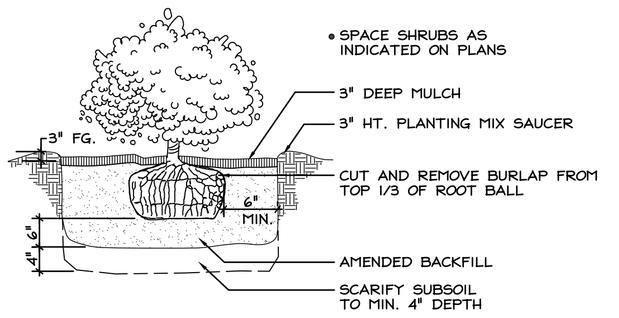

7 SHRUB PLANTING DETAIL

SCALE: NTS

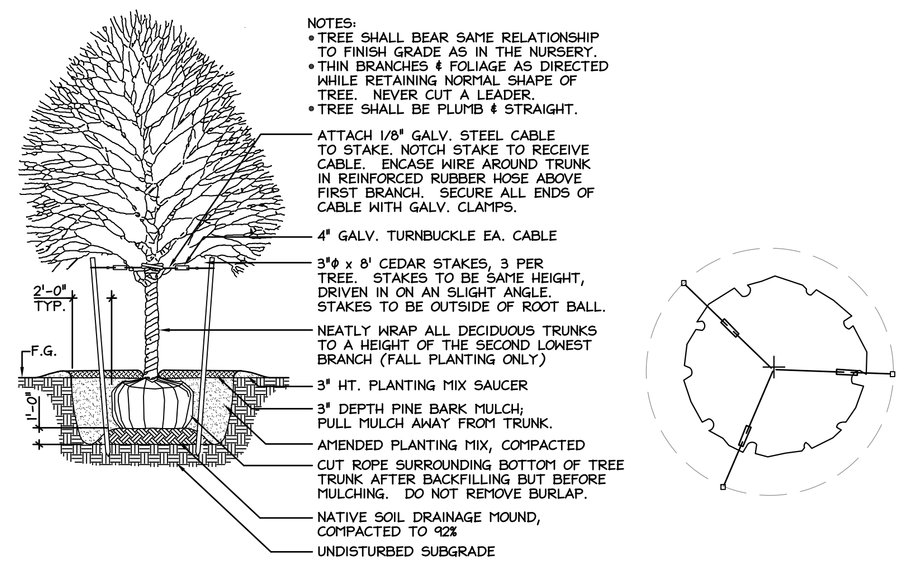

5 DECIDUOUS TREE PLANTING

SCALE: NTS

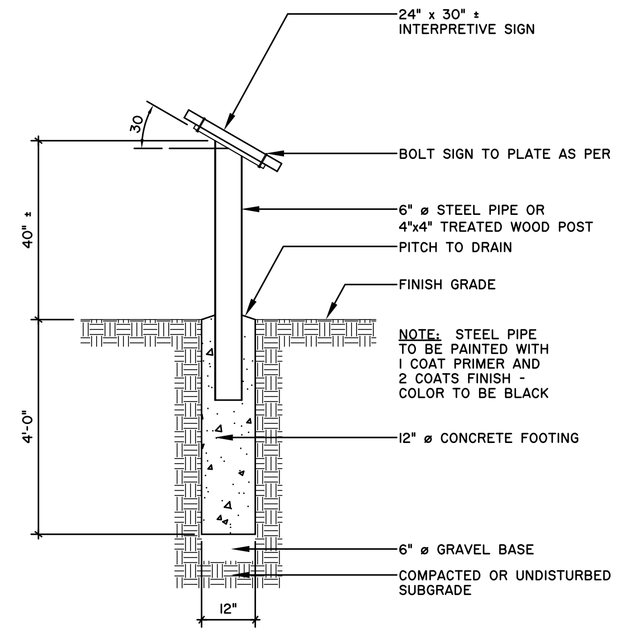

8 INTERPRETIVE SIGN DETAIL

SCALE: 1/2" = 1'-0"

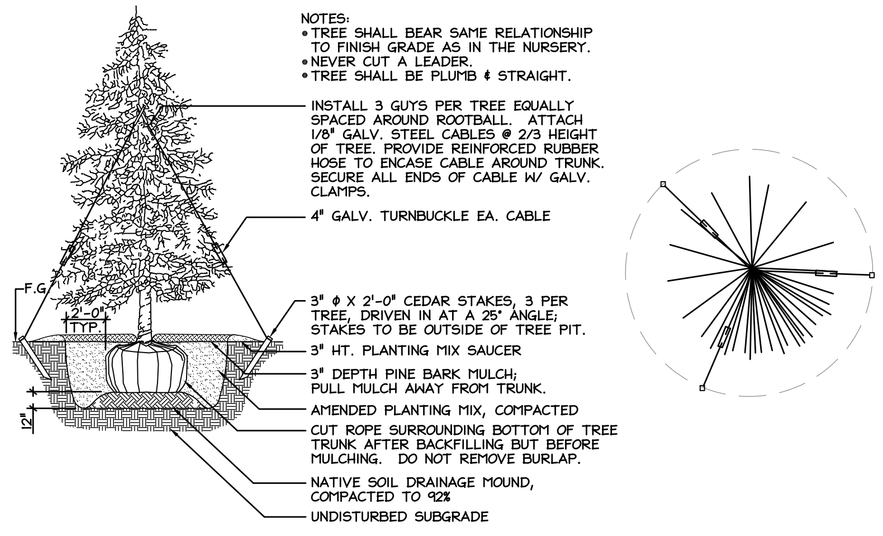

6 EVERGREEN TREE PLANTING

SCALE: NTS

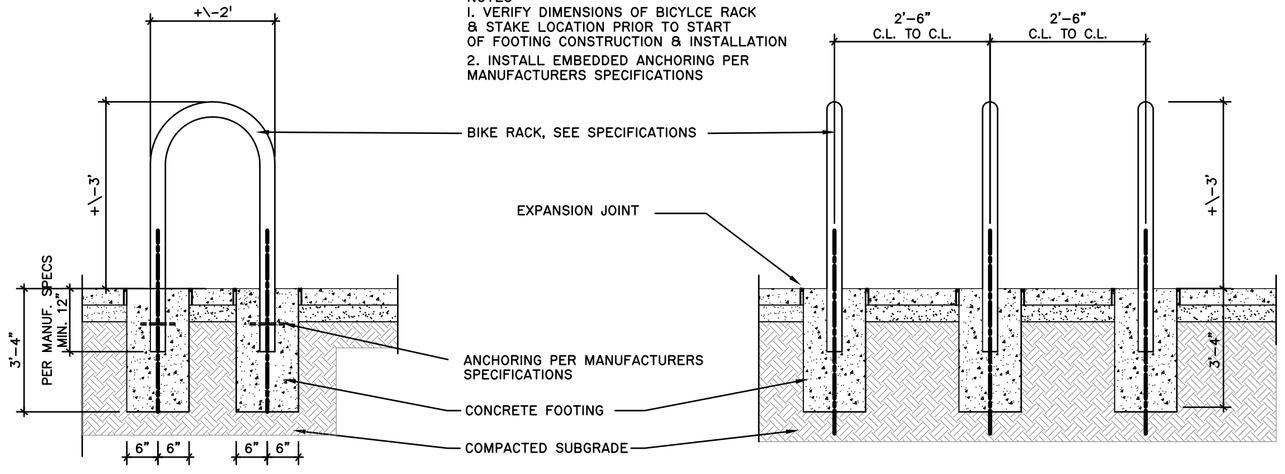

9 BICYCLE RACK

N.T.S.

Approval

Approved under authority of a resolution adopted _____ by the Planning Board of the City of Saratoga Springs.

_____ Chairperson

Date Signed _____

the LA group
Landscape Architecture and Engineering, PC
40 Long Alley
Saratoga Springs
New York 12866
P 518/587-8100
F 518/587-0180
www.thelagroup.com

Unauthorized alteration or addition to this document is a violation of Section 7209 of the New York State Education Law

© the LA Group 2008

Design MCB
Drawn MCB
Checked CMI

PREPARED FOR:
The PIKE Company, INC.
210 Clifton Corporate Parkway
Clifton Park, NY 12065

246 WEST AVENUE
RESIDENTIAL CONDOMINIUM COMPLEX
SARATOGA SPRINGS, NY

Title: SITE DETAILS

Revisions
MYLAR CHECK SET 9/28/2012
MYLAR SET NOVEMBER 2012
May 2014

City #: 12.006.1
Project: 201178
Date: 1/25/2012

Drawing
L-11

Plotted By: MATT BROBSTON
Save Date: 11/16/2012 5:11 PM
File Name: G:\Projects\12006.1\06_West_Ave_246\2011\TechDs\L-7_DETS.dwg

The LA GROUP
Landscape Architecture & Engineering P.C.
People. Purpose. Place.
40 Long Alley
Saratoga Springs
NY 12866
[redacted]
www.thelagroup.com

LETTER OF TRANSMITTAL

TO: Saratoga Springs Planning Department
City Hall
Saratoga Springs, NY 12866

DATE: 6/23/2016 JOB NO.: 201178

RE: 246 West Avenue Apartments

WE ARE SENDING YOU ☑ Attached ☐ Under separate cover via_____the following items

☐ Shop drawings ☐ Prints ☐ Plans ☐ Samples ☐ Specifications
☐ Copy of letter ☐ Change order ☐ _____

COPIES	DATE	NO.	DESCRIPTION
3			Full size Site Plan Application Plan Sets
1			Site Plan Application fee check for $2,650
3			Site plan application form
3			Site plan application check lists
3			Cost Estimate for Letter of Credit
3			Stormwater Management Report (within SWPPP)
3			Draft SWPPP
3			Engineer's Utility Report
3			11 x 17 Architectural plans (elevations and floor plans)
3			Complete Streets Checklist
3			Water Service Agreement
3			Short EAF
3			Special use permit application form
1			Special use permit fee $750
1			CD of application materials

THESE ARE TRANSMITTED as checked below:

☐ For approval ☐ Approved as submitted ☐ Resubmit_____copies for approval
☐ For your records ☐ Approved as noted ☐ Submit_____copies for distribution
☐ As requested ☐ Return for corrections ☐ Return _____corrected prints
☑ For review and comments ☐ _____
☐ FOR BIDS DUE _____20____ ☐ PRINTS RETURNED AFTER LOAN TO US

REMARKS:

cc: SIGNED:_____

If enclosures are not as noted, kindly notify us at once.

[FOR OFFICE USE]

_____
(Application #)

_____
(Date received)

CITY OF SARATOGA SPRINGS

PLANNING BOARD

City Hall - 474 Broadway
Saratoga Springs, New York 12866-2296
Tel: 518-587-3550 fax: 518-580-9480
http://www.saratoga-springs.org

APPLICATION FOR:
SITE PLAN REVIEW
(INCLUDING PUD)

(Rev: 12/2015)

*****Application Check List - All submissions must include completed application check list and all required items.**

Project Name: 246 West Ave. Apartments

Property Address/Location: 246 West Avenue

Tax Parcel #: 178.33-1-20&21 Zoning District: T-4 Urban Neighborhood

(for example: 165.52-4-37)

Proposed Use: 16 Residential units

Date special use permit granted (if any): _____ Date zoning variance granted (if any): _____

Is property located within (check all that apply)?: ☐ Historic District ☑ Architectural Review District
☐ 500' of a State Park, city boundary, or county/state highway

	APPLICANT(S)*	OWNER(S) *(If not applicant)*	ATTORNEY/AGENT
Name	John-Paul Builders, LLC	246 West Avenue, INC.	The LA group
Address	796 Burdeck Street	84 Everett Road Albany, NY 12205	40 Long Alley Saratoga Springs, NY 12866
Phon	[redacted]		[redacted]
Emai	[redacted]		

Identify primary contact person: ☐ Applicant ☐ Owner ☑ Agent

* An applicant must be the property owner, lessee, or one with an option to lease or purchase the property in question.

Application Fee: A check for the total amount below payable to: "Commissioner of Finance" MUST accompany this application.

☐	Sketch Plan -	$250	$ _____
☑	Final Site Plan Approval Residential -	$250 plus $150/unit	$ 2,650
	Non-Residential -	$500 plus $100/1,000 SQ. FT.	$ _____
☐	Modification Residential -	$250	$ _____
	Non-Residential -	$500	$ _____
			Total $ 2,650

Submission Deadline – Check City's website (www.saratoga-springs.org) for application deadlines and meeting dates.

Does any City officer, employee or family member thereof have a financial interest (as defined by General Municipal Law Section 809) in this application? YES ☐ NO ☑. If YES, a statement disclosing the name, residence, nature and extent of this interest must be filed with this application.

I, the undersigned owner, leasee or purchaser under contract for the property, hereby request Site Plan Review by the Planning Board for the identified property above. I agree to meet all requirements under Section 240-7.2 of the Zoning Ordinance of the City of Saratoga Springs.

Furthermore, I hereby authorize members of the Planning Board and designated City staff to enter the property associated with this application for purposes of conducting any necessary site inspections relating to this application.

Applicant Signature: _____ Date: _____

If applicant is not current owner, owner must also sign.

Owner Signature: _____ Date: _____

CITY OF SARATOGA SPRINGS

PLANNING BOARD

City Hall - 474 Broadway
Saratoga Springs, New York 12866-2296
Tel: 518-587-3550 fax: 518-580-9480
http://www.saratoga-springs.org

[FOR OFFICE USE]

_____
(Application #)

_____
(Date received)

Rev.12/2015

SITE PLAN REVIEW SUBMITTAL CHECKLIST

Project Name: 246 West Ave. Apartments

Listed below are the minimum submittal requirements for site plan review as set forth in The City of Saratoga Springs' Zoning Ordinance Appendix B. The Planning Board reserves the right to request additional information, as necessary, to support an application. The Board also reserves the right to reject the application if these minimum requirements are not met. Please complete the checklist below and provide with your submission.

REQUIRED ITEMS: *3 hard copies and 1 digital copy of ALL materials are required.

CHECK EACH ITEM	
☐	1. Completed Site Plan Application (3 hard copies - *1 w/original signature - and 1 digital) and Fee
☑	2. SEQR Environmental Assessment Form- short or long form as required by action.
☐	3. Set of plans including: (3) large scale plans (sheets must be 24" x 36", drawn to a scale of not more than 1"=50 feet). One digital version of all submittal items (pdf) shall be provided.
☐	4. Basic or Full Storm Water Pollution Prevention Plan as required per City Code Chapter 242.
☐	5. Copy of signed DPW water connection agreement for all projects involving new water connections to the City system
☑	6. Engineering Report for Water and Sanitary
☐	7. Complete Streets Checklist
☑	8. Project Cost Estimate-Quantities of work items and estimate of costs

REQUIRED ITEMS ON SITE PLAN, AS APPLICABLE:

☐	1. Property line survey prepared by a licensed land surveyor. Site plan must reference such survey with all corners set and marked on plan. A copy of the original property survey must also be included.
☐	2. North arrow and map scale
☑	3. Parcel tax map number
☑	4. Site location map
☑	5. Site vicinity map (all features within 300 feet of property)
☑	6. Identification of zoning district with corresponding area requirements

☑	7. Building setback lines, either listed or shown on plans.
☑	8. Title block with project name; name and address of applicant; and name and address of property owner (if different)
☑	9. Topography data tied to NGVD 1929 datum
☑	10. Name of all adjacent property owners
☑	11. Parcel street address (existing and any proposed postal addresses)
Yes No N/A ☑ ☐ ☐	12. Identification of all existing or proposed easements, covenants or legal rights-of-way on this property
☐ ☐ ☑	13. References to all prior variances or special use permits
☑ ☐ ☐	14. Existing and proposed contours and spot grades (at 2 foot intervals)
☐ ☐ ☑	15. Identification of all spoil or borrow areas
☐ ☐ ☑	16. Identification of all watercourses, designated State wetlands, buffers, Federal wetlands, floodplains, rock outcroppings, etc.
☑ ☐ ☐	17. Location of proposed storage
☑ ☐ ☐	18. Identification of all existing or proposed sidewalks or pedestrian paths (show type, size and condition of existing sidewalks)
☑ ☐ ☐	19. Location, design specifications and construction material for all proposed site improvements (drains, culverts, retaining walls, berms, fences, etc.)
☑ ☐ ☐	20. Location and distance to fire hydrant
☑ ☐ ☐	21. Location, size, and material of all existing and proposed utility services
☑ ☐ ☐	22. Parking lot layout plan and identification of all loading areas (number all spaces)
☑ ☐ ☐	23. Parking demand calculations
☑ ☐ ☐	24. Identification of parking spaces and access points for physically impaired persons
☑ ☐ ☐	25. Location and screening plan for dumpster or recycling bins
☑ ☐ ☐	26. Location, design, type of construction and materials, proposed use and exterior dimensions of all buildings (existing and proposed) on site
☐ ☐ ☑	27. Identification of storage of any potentially hazardous materials
☑ ☐ ☐	28. Planting plan identifying quantity, species and size of all proposed new plant materials. Label existing plant material to be retained or removed.
☑ ☐ ☐	29. Lighting plan showing type, location and intensity of all existing and proposed exterior lighting fixtures
☑ ☐ ☐	30. Erosion and sediment control plan – including designated concrete truck washout area

Checklist prepared by: The LA Group Date: _____

City of Saratoga Springs Complete Streets Checklist

Saratoga Springs Complete Street Policy Vision (May 2012)

The City of Saratoga Springs Complete Streets Policy will encourage the development of a complete streets network throughout the City to create a more balanced transportation system. The Policy shall be consistent with and assist in achieving the goals and recommendations set forth in the City's Comprehensive Plan and other policy documents. The Policy shall ensure new and updated public and private projects are planned, designed, maintained and operated to enable safer, comfortable and convenient travel to the greatest extent possible for users of all abilities including pedestrians, bicyclists, motorists and transit riders.

This checklist is intended to assist the City in achieving its vision for complete streets.

Project Name: 246 West Ave. Apartments **Date:** _____

Project Location / Limits: 246 West Avenue

Project Description: 16 unit apartment building

Instructions: For each box checked, please provide a brief description for how the item is addressed, not addressed, or not applicable and include supporting documentation.

Street Classification (identify street or streets within the project area)
Principal arterial ☐ Minor arterial ☐ Mixed use collector ■ Mixed use local ☐ Residential collector ☐ Residential local ☐ Special use street ☐

EXISTING CONDITIONS				
Item to Be Addressed/ Checklist Consideration	**YES**	**NO**	**N/A**	**Required Description**
Existing Bicycle & Pedestrian Operations				
Do bicycle and pedestrian accommodations exist? (see page 2 for examples)	84	Sch	☐	
Existing Transit Operations				
Do transit facilities exist within the study area, including bus and train stops/stations?	☐	☐	☐	
Is the project area on a transit route? (CDTA Service Routes)	☐	x	☐	
Are there bicycle racks, shelters, or parking for transit riders available?	☐	x	☐	
Existing Access and Mobility				
Do connective opportunities exist with schools, hospitals, senior care or community centers or persons with disabilities within project area?	x	☐	☐	Project Area adjacent to the YMCA
Are there gaps inhibiting continuous access between schools, hospitals, senior care, or community centers or persons with disabilities within project area?"	☐	x	☐	
Project Area Context				
Are there prominent landmarks, recreation, shopping, employment center, cultural centers or other key destinations that offer opportunities to connect this site?	x	☐	☐	Project Area adjacent to the YMCA
Please list and/or describe planning or policy documents addressing bicyclist, pedestrian, transit, or truck/ freight use for the project area. Examples can include: City of Saratoga Springs Comprehensive Plan, City of Saratoga Springs Open Space Plan, Capital District Transportation Committee Bicycle/ Pedestrian Priority Network, City Standard Details, etc.				

PROPOSED DESIGN				
Item to Be Addressed/ Checklist Consideration	**YES**	**NO**	**N/A**	**Required Description**
Complete Streets Design				
Bicyclist accommodations?	x			Bike Rack and bicycle friendly grates
Pedestrian accommodations?	x			Sidewalks proposed
Access and Mobility accommodations?	x			Adequate sidewalks
Transit accommodations?		x		
Truck/ freight accommodations?			x	
Streetscape elements?	x			sidewalks, landscaping and lighting

Bike Facilities:	
Off-roadway bike accommodations	■ Yes ☐ No ☐ NA
Dedicated bike lane	☐ Yes ■ No ☐ NA
Shared-use lane	☐ Yes ■ No ☐ NA
Shoulder	■ Yes ☐ No ☐ NA
Acceptable actuated traffic signal bike detection, including turn lanes	☐ Yes ■ No ☐ NA
Do signals allow adequate minimum green time for bicyclist to safely cross intersection?	☐ Yes ☐ No ■ NA
Signage and pavement markings specific to proposed bike facilities	☐ Yes ■ No ☐ NA
Bicycle safe inlet grates	■ Yes ☐ No ☐ NA
Bicycle parking, eg. bike racks, bike lockers	■ Yes ☐ No ☐ NA
Transit Facilities:	
Transit shelters	☐ Yes ■ No ☐ NA
Bus turnouts	☐ Yes ■ No ☐ NA
Standing pads	☐ Yes ■ No ☐ NA
Has CDTA been contacted?	☐ Yes ■ No ☐ NA
Access and Mobility Facilities:	
Adequate sidewalk or paved path	■ Yes ☐ No ☐ NA
Acceptable consideration/provision for accessible pedestrian traffic signal features	☐ Yes ☐ No ■ NA
Curb ramps, including detectable warning surface	■ Yes ☐ No ☐ NA
Acceptable slope and cross-slope for driveway ramps, sidewalks, crossings)	■ Yes ☐ No ☐ NA
Have conflicts been reduced among pedestrian, bicyclists, and motor vehicles (access management)?	■ Yes ☐ No ☐ NA

Pedestrian Facilities:	
Sidewalks on both sides of the street	☐ Yes ■ No ☐ NA
Striped crosswalks	☐ Yes ■ No ☐ NA
Geometric modifications to reduce crossing distances such as curb extensions (e.g. bulb-outs)	☐ Yes ■ No ☐ NA
Acceptable provision for pedestrian traffic signal features (e.g. ped. buttons)	☐ Yes ☐ No ■ NA
Pedestrian signage for crossing & wayfinding	☐ Yes ☐ No ■ NA
Safety islands/medians on roadways with two or more traffic lanes in each direction	☐ Yes ☐ No ■ NA
Enhanced supplemental pedestrian treatments at uncontrolled marked crossings	☐ Yes ☐ No ■ NA
Connectivity:	
Are there proposed connections to other bike paths, pedestrian facilities, or transit facilities?	■ Yes ☐ No ☐ NA
Are there proposed connections to any key destinations listed on page 1?	■ Yes ☐ No ☐ NA
Are there proposed connections to neighborhoods?	■ Yes ☐ No ☐ NA
Streetscape Elements:	
Are streetscape elements proposed such as landscaping, street trees, planters, buffer strips, etc?	■ Yes ☐ No ☐ NA
Pedestrian-level lighting	■ Yes ☐ No ☐ NA
Public seating or benches	■ Yes ☐ No ☐ NA

Design Standards and Guidelines				
Design meets guidelines such as described below for bicycle/pedestrian/bus/transit facilities?	■ Yes	☐ No	☐ NA	Describe

***American Association of State Highway and Transportation Officials (AASHTO**) - *A Policy on Geometric Design of Highway and Streets, Guide for the Development of Bicycle Facilities and AASHTO Guide for the Planning, Design, and Operation of Pedestrian Facilities; Public Right-of-Way Accessibility Guide*(PROWAG); *Manual on Uniform Traffic Control Devices* (MUTCD); *Americans with Disabilities Act Accessibility Guidelines* (ADAAG); **National Association of City Transportation Officials (NACTO)** - *Urban Bikeway Design Guide*. **New York State Department of Transportation** – *Highway Design Manual*

617.20
Appendix B
Short Environmental Assessment Form

Instructions for Completing

Part 1 - Project Information. The applicant or project sponsor is responsible for the completion of Part 1. Responses become part of the application for approval or funding, are subject to public review, and may be subject to further verification. Complete Part 1 based on information currently available. If additional research or investigation would be needed to fully respond to any item, please answer as thoroughly as possible based on current information.

Complete all items in Part 1. You may also provide any additional information which you believe will be needed by or useful to the lead agency; attach additional pages as necessary to supplement any item.

Part 1 - Project and Sponsor Information

Name of Action or Project:
246 West Avenue Apartments

Project Location (describe, and attach a location map):
246 West Avenue

Brief Description of Proposed Action:
16 residential units with associated parking. Watermain extension along West Ave.

Name of Applicant or Sponsor:	Telephone:
	E-Mail:

Address:

City/PO:	State:	Zip Code:

	NO	YES
1. Does the proposed action only involve the legislative adoption of a plan, local law, ordinance, administrative rule, or regulation? If Yes, attach a narrative description of the intent of the proposed action and the environmental resources that may be affected in the municipality and proceed to Part 2. If no, continue to question 2.	X	
2. Does the proposed action require a permit, approval or funding from any other governmental Agency? If Yes, list agency(s) name and permit or approval: Site plan and Special use permit(Saratoga Springs Planning Board) Saratoga Springs Design review commission approval		X

3.a. Total acreage of the site of the proposed action? .51 acres
b. Total acreage to be physically disturbed? .51 acres
c. Total acreage (project site and any contiguous properties) owned or controlled by the applicant or project sponsor? .51 acres

4. Check all land uses that occur on, adjoining and near the proposed action.
☐ Urban ☐ Rural (non-agriculture) ☐ Industrial ☒ Commercial ☐ Residential (suburban)
☐ Forest ☒ Agriculture ☐ Aquatic ☒ Other (specify): YMCA
☐ Parkland

	NO	YES	N/A
5. Is the proposed action,			
a. A permitted use under the zoning regulations?		X	
b. Consistent with the adopted comprehensive plan?		X	

	NO	YES
6. Is the proposed action consistent with the predominant character of the existing built or natural landscape?		X
7. Is the site of the proposed action located in, or does it adjoin, a state listed Critical Environmental Area? If Yes, identify: _____		X
8. a. Will the proposed action result in a substantial increase in traffic above present levels?		X
b. Are public transportation service(s) available at or near the site of the proposed action?		X
c. Are any pedestrian accommodations or bicycle routes available on or near site of the proposed action?		X
9. Does the proposed action meet or exceed the state energy code requirements? If the proposed action will exceed requirements, describe design features and technologies: _____		X
10. Will the proposed action connect to an existing public/private water supply? If No, describe method for providing potable water: _____		X
11. Will the proposed action connect to existing wastewater utilities? If No, describe method for providing wastewater treatment: _____		X
12. a. Does the site contain a structure that is listed on either the State or National Register of Historic Places?		X
b. Is the proposed action located in an archeological sensitive area?		X
13. a. Does any portion of the site of the proposed action, or lands adjoining the proposed action, contain wetlands or other waterbodies regulated by a federal, state or local agency?		X
b. Would the proposed action physically alter, or encroach into, any existing wetland or waterbody? If Yes, identify the wetland or waterbody and extent of alterations in square feet or acres: _____		X

14. Identify the typical habitat types that occur on, or are likely to be found on the project site. Check all that apply:

☐ Shoreline ☐ Forest ☐ Agricultural/grasslands ☒ Early mid-successional

☐ Wetland ☐ Urban ☐ Suburban

	NO	YES
15. Does the site of the proposed action contain any species of animal, or associated habitats, listed by the State or Federal government as threatened or endangered?		X
16. Is the project site located in the 100 year flood plain?		X
17. Will the proposed action create storm water discharge, either from point or non-point sources? If Yes,		
a. Will storm water discharges flow to adjacent properties? ☐ NO ☒ YES		X
b. Will storm water discharges be directed to established conveyance systems (runoff and storm drains)? If Yes, briefly describe: ☐ NO ☒ YES The stormwater design will connect the overflow from the system to an existing city storm main within West Ave.		

	NO	YES
18. Does the proposed action include construction or other activities that result in the impoundment of water or other liquids (e.g. retention pond, waste lagoon, dam)? If Yes, explain purpose and size: _____ _____ _____	X	
19. Has the site of the proposed action or an adjoining property been the location of an active or closed solid waste management facility? If Yes, describe: _____ _____ _____	X	
20. Has the site of the proposed action or an adjoining property been the subject of remediation (ongoing or completed) for hazardous waste? If Yes, describe: _____ _____ _____	X	

I AFFIRM THAT THE INFORMATION PROVIDED ABOVE IS TRUE AND ACCURATE TO THE BEST OF MY KNOWLEDGE

Applicant/sponsor name: _____ Date: _____

Signature: _____

Part 2 - Impact Assessment. The Lead Agency is responsible for the completion of Part 2. Answer all of the following questions in Part 2 using the information contained in Part 1 and other materials submitted by the project sponsor or otherwise available to the reviewer. When answering the questions the reviewer should be guided by the concept "Have my responses been reasonable considering the scale and context of the proposed action?"

	No, or small impact may occur	Moderate to large impact may occur
1. Will the proposed action create a material conflict with an adopted land use plan or zoning regulations?		
2. Will the proposed action result in a change in the use or intensity of use of land?		
3. Will the proposed action impair the character or quality of the existing community?		
4. Will the proposed action have an impact on the environmental characteristics that caused the establishment of a Critical Environmental Area (CEA)?		
5. Will the proposed action result in an adverse change in the existing level of traffic or affect existing infrastructure for mass transit, biking or walkway?		
6. Will the proposed action cause an increase in the use of energy and it fails to incorporate reasonably available energy conservation or renewable energy opportunities?		
7. Will the proposed action impact existing: a. public / private water supplies?		
b. public / private wastewater treatment utilities?		
8. Will the proposed action impair the character or quality of important historic, archaeological, architectural or aesthetic resources?		
9. Will the proposed action result in an adverse change to natural resources (e.g., wetlands, waterbodies, groundwater, air quality, flora and fauna)?		

	No, or small impact may occur	Moderate to large impact may occur
10. Will the proposed action result in an increase in the potential for erosion, flooding or drainage problems?		
11. Will the proposed action create a hazard to environmental resources or human health?		

Part 3 - Determination of significance. The Lead Agency is responsible for the completion of Part 3. For every question in Part 2 that was answered "moderate to large impact may occur", or if there is a need to explain why a particular element of the proposed action may or will not result in a significant adverse environmental impact, please complete Part 3. Part 3 should, in sufficient detail, identify the impact, including any measures or design elements that have been included by the project sponsor to avoid or reduce impacts. Part 3 should also explain how the lead agency determined that the impact may or will not be significant. Each potential impact should be assessed considering its setting, probability of occurring, duration, irreversibility, geographic scope and magnitude. Also consider the potential for short-term, long-term and cumulative impacts.

□ Check this box if you have determined, based on the information and analysis above, and any supporting documentation, that the proposed action may result in one or more potentially large or significant adverse impacts and an environmental impact statement is required.

□ Check this box if you have determined, based on the information and analysis above, and any supporting documentation, that the proposed action will not result in any significant adverse environmental impacts.

Name of Lead Agency	Date
Print or Type Name of Responsible Officer in Lead Agency	Title of Responsible Officer
Signature of Responsible Officer in Lead Agency	Signature of Preparer (if different from Responsible Officer)

The LA GROUP
Landscape Architecture & Engineering P.C.
People. Purpose. Place.
40 Long Alley
Saratoga Springs
NY 12866
[redacted]
www.thelagroup.com

Engineering Report
Water and Sanitary Sewer

For

246 West Avenue
Residential Apartment Building

SARATOGA SPRINGS, NEW YORK

Planning Board #16.XXX

Prepared For

John-Paul Builders, LLC
796 Burdeck Street
Schenectady, NY 12306
Contact: John Luke Hodorowski

Prepared By

The LA Group, P.C.
40 Long Alley
Saratoga Springs, New York 12866

June 23, 2016

I. Introduction

John-Paul Builders, LLC is proposing to construct a sixteen-unit apartment building at 246 West Avenue (Tax Map Parcels 178.33-1-20 & 21) in the city of Saratoga Springs, NY. Currently, the site is developed as residence with a single home onsite. There are grassed and forested cover types on the property. The site is generally flat. The surrounding area is developed with a small hotel to the north, the Saratoga Springs YMCA to the south and residential housing to the east. This project is for the construction of a new apartment building.

II. Project Description

The proposed sixteen-unit apartment project will consist of one building. The project is proposing a total of 16 residential units, totaling 18 bedrooms. The units will have internal fire sprinklers, and fire hydrants will be located on West Avenue.

III. Existing Water and Sanitary Sewer Utilities

Water Distribution – A 6-inch cast-iron water line is present on West Avenue, immediately adjacent to the parcel. According to the City of Saratoga Springs DPW, this line is very old and fragile and will not likely support the design flows and pressures required by this project.

Several years ago, the YMCA agreed to and installed a new 12-inch ductile iron water line from the Ballston Avenue intersection up to their new facility. This 12-inch water main is located on the west side of West Avenue and ends approximately 800 feet south of the project.

There is a 12-inch ductile iron water main located on the west side of West Avenue terminating approximately 500 feet north of the project.

Sanitary Sewer – An existing 16-inch sanitary sewer main owned and maintained by the Saratoga County Sewer District No. 1 (SCSD #1) runs in a southeasterly direction past the property in an easement from the YMCA of Saratoga Springs. The nearest access manhole is located on the west side of West Avenue approximately 50 feet south of the southwest property corner.

IV. Projected Water and Wastewater Flows

The table below provides information on the anticipated wastewater flow rates for the project:

Description	Use Rate	Total Use
(18) bedrooms	110 gpd/bedroom[1]	1,980 gpd

Average daily flow for wastewater is estimated to be 1.4 gallons per minute (gpm) based on a 24 hour day. Estimated peak hourly flow is 5.9 gpm (4.2 x average).[2]

Average daily demand for water is estimated to be approximately equal to the wastewater flow or 1.4 gpm. Instantaneous peak demand is estimated to be 80 gpm.[3]

For the purposes of input into the City of Saratoga Springs water model, we offer the following estimated water demands for the project:

- Average Day Demand is 1.4 gallons per minute (GPM) over the 24 hour period.
- Max Day Demand is 2.8 gallons per minute (GPM) based on twice the average.
- Peak Hourly Flow is 5.9 gallons per minute (GPM) based on 4.2 times the average.
- Fire Flow Demand is 1,000 gallons per minute (GPM) per ISO guidelines.

V. Proposed Water and Wastewater Utilities

Proposed Water Utilities

To service the project, it was initially proposed to tap the existing 6-inch water main on West Avenue. Following discussions with the City, it was agreed to extend the existing 12-inch water main from the north up to the southerly property line. The line will be extended in a southerly direction, approximately 500 feet terminating with a new hydrant, valve and end cap for future connection. New fire hydrants will be installed to maintain a spacing of 400 feet. This arrangement will benefit the municipality in providing another link in the ultimate connection to the existing 12-inch water main brought up from Ballston Avenue by the YMCA.

The units will receive water service via a six-inch ductile iron water line. Once inside the main

building, the water service will be divided to individual meters to serve the units.

Needed Fire Flow (NFF) for residential occupancies such as apartment buildings protected by an automatic sprinkler system installed in accordance with NFPA 13R is the demand at the base of the automatic sprinkler riser. The minimum NFF is 1,000 gpm at 20 psi for a duration of 2 hours.[4]

Connections and appurtenances, including mechanical joints, tees, isolation valves, thrust blocks, trenching, bedding, service connections, as well as testing and disinfection will all be specified in accordance with City of Saratoga Springs standards.

Proposed Wastewater Utilities

From the main building, sanitary wastewater will be piped in a six-inch PVC lateral installed at a slope of approximately 1.0% across West Avenue to a new sanitary sewer manhole. From this manhole the sewerline will be run adjacent to the westerly line of West Avenue to an existing SCSD #1 manhole.

All sanitary sewer lines and manhole connections will be furnished and installed according to Saratoga County Sewer District No. 1 standards.

Notes

1. *From Table 1, Appendix 75-A Wastewater Treatment Standards - Residential Onsite Systems (110 gallons per day per bedroom)*
2. *From Figure 1, GLUMRB Recommended Standards for Wastewater Facilities*
   Q = (18 + P ½) ÷ (4 + P ½) where P = population in thousands
3. *From Table XIV Community Water Systems Source Book, Ameen (5.0 gpm/residence)*
4. *Insurance Services Office, Inc. "Guide for Determination of Needed Fire Flow" (Chapter 1, Note 2)*

The LA GROUP
Landscape Architecture & Engineering P.C.

40 Long Alley
Saratoga Springs
NY 12866

p: 518-587-8100
f: 518-587-0180
www.thelagroup.com

Stormwater Pollution Prevention Plan

for:

246 West Avenue Apartments

Owner/Operator(s):

John-Paul Builders, LLC
796 Burdeck Street
Schenectady, NY 12306
Contact: John Luke Hodorowski
518-356-1435

SWPPP Contact(s):

The LA Group, PC
40 Long Alley
Saratoga Springs, NY 12866
1-518-587-8100
1-518-587-0180

SWPPP Preparation Date:

June 23, 2016

Table of Contents

1.0 PERMIT OVERVIEW AND REQUIREMENTS 1

1.1 PERMIT OVERVIEW 1

2.0 SWPPP REVIEW, UPDATE 1

2.1 SWPPP REVIEW 1
2.2 SWPPP UPDATE 1

3.0 SITE ASSESSMENT, EVALUATION AND PLANNING 2

3.1 PROJECT LOCATION 2
3.2 PRE-DEVELOPMENT CONDITIONS 2
3.3 PROJECT SCOPE 2
3.4 RECEIVING WATERS 2
3.5 HISTORIC PRESERVATION DETERMINATION/ENDANGERED SPECIES 2
3.6 SOILS 2

4.0 EROSION AND SEDIMENT CONTROL 3

4.1 EROSION AND SEDIMENT CONTROL PRACTICES 3
4.2 EROSION AND SEDIMENT CONTROL DRAWINGS 3
4.3 CONSTRUCTION SEQUENCE OF OPERATIONS 3
4.4 EROSION AND SEDIMENT CONTROL PRACTICE MAINTENANCE 4
4.5 EROSION AND SEDIMENT CONTROL INSPECTION 5
4.6 CONTRACTOR SEQUENCE FORM 5

5.0 POST CONSTRUCTION STORMWATER MANAGEMENT PRACTICES 6

5.1 STORMWATER MANAGEMENT CONTROLS 6
5.2 POST CONSTRUCTION STORMWATER MANAGEMENT DRAWINGS 6
5.3 HYDRAULIC AND HYDROLOGIC ANALYSIS 6
5.4 COMPARISON OF PRE AND POST CONSTRUCTION STORMWATER RUNOFF 6
5.5 WATER QUALITY VOLUME 7
5.6 RUNOFF REDUCTION VOLUME 8
5.7 CHANNEL PROTECTION VOLUME (CPV) 8

6.0 POST CONSTRUCTION STORMWATER MAINTENANCE 8

6.1 MECHANISM OF OPERATION AND MAINTENANCE 8
6.2 MAINTENANCE TO BE PERFORMED 8

7.0 CONSTRUCTION WASTE 9

8.0 TEMPORARY STABILIZATION FOR FROZEN CONDITIONS 10

9.0 SPILL PREVENTION PRACTICES 11

10.0 CERTIFICATIONS 15

11.0 DEFINITIONS 20

Appendices

A **HydroCAD Calculations and Storm Data**

B **Soil Survey and Map Set** – Location Map, Site Preparation and Demolition, Grading and Utility Plan

C **SWPPP Inspection Forms** –SWPPP Inspection Report

D **Other SWPPP Forms** – Construction Sequence, SWPPP Plan Changes, Spill Response Form, Stormwater Management Practice Maintenance Log

1.0 PERMIT OVERVIEW AND REQUIREMENTS

1.1 Permit Overview

This Stormwater Pollution Prevention Plan (SWPPP) is prepared to inform the landowner and construction personnel of the measures to be implemented for controlling runoff and pollutants from the site during and after construction activities.

The operator is responsible to maintain onsite in a secure location that is accessible during normal working hours to an individual performing a compliance inspection, the following information:

- ✓ the SWPPP,
- ✓ All inspection reports.

Technical standards are detailed in the "New York State Standards and Specifications for Sediment and Erosion and Sediment Control (August 2010)", as well as illustrated on the Grading and Utility Plan included in **Appendix B**.

2.0 SWPPP REVIEW, UPDATE

2.1 SWPPP Review

City of Saratoga Springs requires preparation of a SWPPP for non-residential activities disturbing 0.1 acres or more. The project is proposed to disturb 0.51 acres. Project review will be conducted by the City of Saratoga Springs.

2.2 SWPPP Update

The permittee identified in this SWPPP shall amend the SWPPP under the following conditions:

- ✓ Whenever the current provisions prove to be ineffective in minimizing pollutants in stormwater discharge from the site
- ✓ Whenever there is a change in design, construction or operation that could have an effect on the discharge of pollutants
- ✓ To address issues or deficiencies identified during an inspection by the qualified inspector, the Department or other regulatory authority
- ✓ To identify a new subcontractor or owner that will implement any part of the SWPPP.

If modifications are required to the post-stormwater management practices the City of Saratoga Springs must be notified in writing of any planned amendments or modifications to the post-construction stormwater management practice component of the SWPPP.

3.0 SITE ASSESSMENT, EVALUATION AND PLANNING

3.1 Project Location

The project is located at 246 West Avenue in the City of Saratoga Springs, Saratoga County, NY 12866.

See **Appendix B** for a general site location map.

3.2 Pre-Development Conditions

Currently, the site is developed as residential with a single home onsite. There are grassed and forested cover types on the property. The site is generally flat. The surrounding area is developed with a small hotel to the north, the Saratoga Springs YMCA to the south and residential housing to the east.

3.3 Project Scope

Specifically, this project is for the construction of a three-story apartment building with a total of 16 units. The total building footprint will be 9,800 square feet. There will be 24 parking spaces provided for the occupants of the apartments, 17 of which will be at the ground level of the three-story building. The Project will disturb approximately +/-0.51 acres.

3.4 Receiving Waters

The closest NYSDEC mapped stream located in the project vicinity that the site drains to is an unnamed tributary to Geyser Creek (NYSDEC # 841-137.) This stream is located approximately 2,000 feet to the west of the site, in an agricultural field. This stream is classified as a C stream by NYSDEC.

3.5 Historic Preservation Determination/Endangered Species

The project received SEQRA and planning board approval on December 9, 2011 at which time it was determined that there were no archeological or endangered species concerns within the project area.

3.6 Soils

The USDA/NRCS soil survey map for this site shows Deerfield loamy fine sand and Windsor loamy sand series mapped in the project vicinity. These soils are classified in the hydrologic soil group ‘A’. Soil borings were completed by Dente Engineering in April of 2005 that found the project area to have deep sands. Falling head permeability tests are to be completed to confirm infiltration rates. Soil survey and boring results can be found in **Appendix B**.

4.0 EROSION AND SEDIMENT CONTROL

4.1 Erosion and Sediment Control Practices

Temporary Structural Practices

- ✓ Silt Fence
- ✓ Dust Control
- ✓ Construction Entrance

Permanent Structural Controls

- ✓ Asphalt pavement/concrete walks

Temporary Stabilization Practices (including vegetative practices)

- ✓ Seed and mulch bare soil areas within 14 days of disturbance unless construction will resume in that area within 21 days.

Permanent Stabilization Practices (including vegetative practices)

- ✓ Seed and mulch all disturbed areas. Slopes that are 3:1 or steeper should receive a Rolled Erosion Control Product (RECP), sodding, and or hydro-seeding a homogenous mixture of wood fiber mulch with tackifying agent.

Refer to Construction Drawings attached in **Appendix B** for detailed information on each practice.

4.2 Erosion and Sediment Control Drawings

Erosion and Sediment Control practices are shown on the Construction Drawings included in **Appendix B.**

4.3 Construction Sequence of Operations

- ✓ Temporary structural erosion controls will be installed prior to earthwork as per the attached plans.
- ✓ Areas to be undisturbed for more than 14 days will be temporarily stabilized by seeding.
- ✓ Disturbed areas will be reseeded and mulched immediately after final contours are re-established and no more than 14 days after the completion of construction at that site.
- ✓ Temporary erosion control devices will not be removed until the area served is stabilized by the growth of vegetation and the area is certified as being stabilized by the Erosion Control Inspector.

Construction Activities	Start → Stop
Sequence must include major items such as, but not limited to, clearing and grubbing, excavation and grading, utility and infrastructure installation and any other activity resulting in soil disturbance. Include installation of erosion and sediment control practices and timing of installation.	
Install silt fence and construction fence prior to any site disturbance. Maintain erosion control measures for duration of site disturbances.	Week 1
Excavate and install underground utilities.	Weeks 1-3
Parking Lot Construction	Weeks 3-6
Building construction	Week 3-completion
Fine grade and landscape	After completion of building
Remove erosion and sediment control measures upon stabilization of contributing areas.	At completion 80% Germination

4.4 Erosion and Sediment Control Practice Maintenance

Temporary erosion and sediment control practices will need to be maintained frequently during construction. It is the responsibility of the operator to inspect, and maintain the temporary controls so that they are working efficiently. The operator needs to pay close attention to SWPPP Inspection Reports that will advise of needed maintenance. Captured sediment will have to be removed periodically from each practice in order for the control to function properly. Temporary erosion and sediment control practice maintenance needs are listed below:

- ✓ Silt fence – maintenance shall be performed as needed and material removed when “bulges” develop in the silt fence.
- ✓ Stabilized construction entrance – entrance shall be maintained in a condition which shall prevent tracking. This may require periodic top dressing with additional aggregate. All sediment tracked onto or spilled on public rights of way shall be removed immediately. When necessary, wheels must be cleaned to remove sediment prior to entrance on public rights of way. When washing is required, it shall be done in an area stabilized with aggregate.

4.5 Erosion and Sediment Control Inspection

- A qualified inspector shall conduct an assessment of the site prior to the commencement of construction and certify in an inspection report that the appropriate erosion and sediment controls described in the SWPPP have been adequately installed to ensure overall preparedness of the site for commencement of construction.
- This qualified inspector must be a Licensed Professional Engineer, Certified Professional in Erosion and Sediment Control (CPESC), Registered Landscape Architect, or someone working under the direct supervision of, and at the same company as, the licensed Professional Engineer or Registered Landscape Architect, provided they have received 4 hours of Department endorsed training in proper erosion and sediment control principles from a Soil and Water Conservation District, or other Department endorsed entity. After receiving the initial training, the qualified inspector shall receive 4 hours of training every 3 years.
- The day-to-day erosion control activities on the site will be monitored by the construction manager. The qualified inspector and his crews will make ***at least one inspection every seven (7) days*** of erosion control devices, and non-stabilized areas during construction. A maintenance inspection report will be completed by the qualified inspector after each inspection. The report form to be completed by the inspector is attached in **Appendix C.** Reports should be compiled and maintained on-site in the SWPPP 3-ring binder.
- All measures will be maintained in good working order; if repair is necessary, it will be initiated within 24 hours of report. The qualified inspector shall take photographs of any needed repairs and also photograph when the repairs are completed. These photographs will be time and date stamped and attached to the weekly inspection report.
- Seeded and planted areas will be inspected for bare spots, washouts, and healthy growth. If necessary, spot reseeding or sodding will be implemented.
- A trained contractor will be an employee from the contracting company responsible for the implementation of the SWPPP. This person will be onsite when any soil disturbing activities are being conducted. The trained contractor must have received 4 hours of Department endorsed training in proper erosion and sediment control principles from a Soil and Water Conservation District, or other Department endorsed entity. After receiving the initial training, the qualified inspector shall receive 4 hours of training every 3 years. This trained contractor cannot conduct the regular SWPPP compliance inspections unless they meet the qualified inspector qualifications.

4.6 Contractor Sequence Form

The operator shall prepare a summary of construction status using the Construction Sequence Form (included in **Appendix D**) once every month. Significant deviations to the sequence and reasons for those deviations (i.e. weather, subcontractor availability, etc.), shall be noted by the contractor. The schedule shall be used to record the dates for initiation of construction, implementation of erosion control measures, stabilization, etc. A copy of this table will be maintained at the construction site and updated.

5.0 POST CONSTRUCTION STORMWATER MANAGEMENT PRACTICES

5.1 Stormwater Management Controls

The project is proposing the use of underground infiltration chambers and an infiltration basin to capture and treat site runoff.

Stormwater runoff from the roof will discharge to the underground infiltration chambers. Runoff will be pretreated via an isolator row.

5.2 Post Construction Stormwater Management Drawings

Post construction stormwater management controls are shown on the Construction Drawings included in **Appendix B.**

5.3 Hydraulic and Hydrologic Analysis

The program utilized for quantifying stormwater runoff rates and volumes was ***HydroCAD*** software, produced by Applied Microcomputer Systems of Chocorua, NH. The SCS 24-hour Type II design storms for 1, 10, and 100-year frequency rainfall were analyzed **(Appendix A).**

- ✓ Hydrologic/hydraulic analysis for all structural components of the stormwater control system for the applicable design storms.
- ✓ Comparison of post-development stormwater runoff conditions with pre-development conditions.
- ✓ Dimensions, material specifications and installation details for each post-construction stormwater control practice.

5.4 Comparison of Pre and Post Construction Stormwater Runoff

Stormwater Quantity. These calculations are based on the HydroCAD analysis.

The design storms used for the pre-development versus post-development comparison were the 1, 10, and 100-year, 24-hour duration, SCS Type II events.

The rainfall amounts for these storms are 2.15, 3.75, and 6.20 inches, respectively.

Under pre-development conditions the majority of the site drains to the south east where runoff flows off site to lands owned by the Saratoga YMCA (AP-2) while the north western portion of the site flows to West Avenue (AP-1).

Post-development stormwater runoff will be directed to a proposed underground infiltration chamber gallery, infiltration trench and an infiltration basin ultimately entering the underlying soils.

The project proposes no increase in flow offsite to the south east or to West Avenue.

	Pre-Development	**Post-Development**
10 year, 24 hour storm (Qp)	0.28 CFS	0.11 CFS
100 year, 24 hour storm (Qf)	0.57 CFS	0.20 CFS

5.5 Water Quality Volume

The following formula was utilized to determine water quality volume:

$$WQ_V = \frac{(P)\ (R_V)(A)}{12}$$

Where:
WQ_V= Water Quality Volume (acre/feet)
P = 90% Rainfall Event
R_V = 0.05 + 0.009(I) where I is impervious cover in percent
A = Subcatchment area in acres

Water quality volume at the site will be managed though the use of underground infiltration chambers and an infiltration pond.

Table 5-1
Water Quality Volume (WQv) Summary

SMP	**Type**	**Provided** (ac-ft)
SMP-1	Underground Infiltration Chambers	0.025
SMP-2	Infiltration Basin/Trench	0.011
Total		0.036

Stormwater runoff from the proposed parking lot and entrance drive will be piped to the underground infiltration chambers (SMP-1). The northern half of the roof will also be directed to the underground infiltration chambers while the southern portion will be directed into gravel drip strips (SMP-2). The remainder of the site and overflow from the gravel drip strips will be directed to the infiltration basin located in

the south east corner of the site (SMP-2). All practices provide WQv/RRv through infiltration. The required WQv for the project site is 0.036 ac-ft which equals the WQv provided (0.036 ac-ft).

5.6 Runoff Reduction Volume

The total Runoff Reduction for this project is 0.036 ac-ft provided by SMP-1 and SMP-2. This is equal to 100% of the WQv.

5.7 Channel Protection Volume (CPv)

Channel protection volume is not required as the entire CPv is reduced through infiltration.

6.0 POST CONSTRUCTION STORMWATER MAINTENANCE

6.1 Mechanism of Operation and Maintenance

John-Paul Construction, Inc. will be responsible for the long term operation and maintenance of the stormwater management practices for the life of the site.

6.2 Maintenance to be Performed

Post-construction maintenance for this project will consist of regular inspections of permanent stormwater management facilities. These maintenance procedures are essential to assure continual performance of the stormwater management practices on your site. During the inspection and any maintenance activity to the stormwater management practices, the responsible party should fill out an inspection and maintenance log (**Appendix C**) to record that it was done.

The operator shall retain a qualified professional to: 1) summarize the inspections conducted, maintenance activities performed and repairs made throughout the year, and 2) certify to the City that the specific stormwater management facilities installed at the site are being properly maintained, are in good operation condition and functioning as intended.

Underground Pipe Storage/Infiltration System

- The systems should be inspected quarterly for the first year and if there are no problems, the system can be inspected annually after the first year.
- If sediment is accumulating on the bottom of the system, pump in water via a flushing port or observation well and then pump the sediment laden water out via the flushing port or the inlet. This can be done with a vacuum truck. The system may have to be flushed multiple times until it is clean of sediment.

- Also, the manifold feeding the pipe storage should be flushed by pumping water in the manhole access and out the flushing port. This should be done during the routine inspection.

Infiltration Basin

- The systems should be inspected quarterly for the first year and if there are no problems, the system can be inspected semi-annually after the first year.
- Periodically mow infiltration basin embankments and remove woody vegetation. Stabilize eroded banks and repair undercut and eroded areas at inflow location, as needed.
- If infiltration system does not drain within 72-hours following a rainfall event, then a qualified professional should assess the condition of the system to determine measures required to restore infiltration function, including but not limited to removal of accumulated sediments or reconstruction of the system.
- Every year disc aerate bottom of ponds.
- Every 5-years scrape bottom of ponds to remove sediment and restore to original cross-section and infiltration rate. Seed or sod to restore ground cover.

Drip Strip (Infiltration Trench)

- Ensure strip is clear of debris and dewatering between storms.
- Replace stone as necessary if strip does not dewater between storms.

Catch Basins

- Sediment removal with a vacuum truck should be done at least once a year, preferably after spring runoff and then in early fall, or when they are at 50% capacity, whichever comes first.
- Any mechanical valves should be operated for inspection every two months.

7.0 CONSTRUCTION WASTE

Waste Materials: All waste materials generated during construction will be disposed at a suitable landfill or transfer station.

Hazardous Waste: The project will not be a generator of hazardous waste and it is not anticipated that any hazardous waste will be generated during construction. If there are any materials generated, a licensed hazardous waste carrier will be contracted to dispose the hazardous material at a suitable disposal site. If hazardous materials are discovered during construction, the work will be stopped until the issue is resolved.

Waste: Portable sanitary facilities will be made available to construction personnel and will be serviced regularly.

8.0 TEMPORARY STABILIZATION FOR FROZEN CONDITIONS

The following temporary stabilization measures **MUST** be performed when construction is occurring during winter/frozen ground conditions. The following requirements do not supersede any other requirements of this SWPPP as they apply to non-frozen ground conditions.

- Perimeter erosion control **MUST** still be installed prior to earthwork disturbance as per this SWPPP.
- Any areas that cannot be seeded to turf by October 1st or earlier will receive a temporary seeding. The temporary seeding will consist of winter rye seeded at the rate of 120 pounds per acre (2.5 pounds per 1,000 square feet) or stabilized as per the temporary stabilization for winter construction/frozen conditions.
- Any area of disturbance that will remain inactive for a period of 14 consecutive days **MUST** be mulched. This includes any previously disturbed areas that are covered with snow.
- Mulch **MUST** consist of loose straw applied at the rate of 2 to 3 bales (90 to 100 pounds) per thousand square feet.
- Mulch **MUST** be applied uniformly over the area of bare soil or bare soil that is covered with snow. For the latter condition, mulch **MUST** be applied on top of snow.
- Using a tracked vehicle, mulch **MUST** be crimped into the bare soil/snow. The tracked vehicle **MUST** be driven across the mulched areas in at least two directions to maximize crimping of mulch into the soil/snow.
- If mulch gets blown off an area to a significant degree, the site inspector **WILL** require that an area be re-mulched in accordance with Items 2 through 5 above, and this area **WILL** be included on the inspection checklist for the next inspection.
- If a particular area repeatedly experiences loss of mulch due to wind, then the inspector **WILL** require that an alternative method be used to secure the mulch in place. Such alternatives may include the use of netting, tackifier or other methods deemed appropriate by the inspector.
- During periods when snow is melting and/or surface soils are thawing during daytime hours, mulched areas **MUST** be re-tracked (crimped) as per Item 5 above at least once every seven days, more frequently if directed by the inspector. Additional mulch may be required to obtain complete coverage of an area. Biodegradable erosion control matting may be required on steeper slopes.
- Additional stabilization measures for non-frozen ground conditions described in this SWPPP **WILL** be implemented at the time deemed appropriate by the inspector.

During the winter season, if a site has been stabilized and soil disturbing activities have been suspended for the winter, weekly inspections can be suspended. However, monthly inspections must still be conducted. All normal weekly inspections must resume when soil disturbing activities resume.

9.0 SPILL PREVENTION PRACTICES

Good Housekeeping and Material Management Practices

The following good housekeeping and material management practices will be followed on site during the construction project to reduce the risk of spills or other accidental exposure of materials and substances to stormwater runoff.

- Materials will be brought on site in the minimum quantities required.
- All materials stored on site will be stored in a neat, orderly manner in their appropriate containers, and if possible, under a roof or other enclosure.
- Products will be kept in their original containers with the original manufacturer's label.
- Substances will not be mixed with one another unless recommended by the manufacturer.
- Whenever possible, all of a product will be used up before disposal.
- Manufacturer's recommendations for proper use and disposal will be followed.
- The construction manager or his designee will inspect regularly to ensure proper use and disposal of materials on site.
- The contractor shall prohibit washing of tools, equipment, and machinery in or within 100 feet of any watercourse or wetland.
- All above grade storage tanks are to be protected from vehicle damage by temporary barriers.

Inventory for Pollution Prevention Plan

The materials and substances listed below are expected to be on-site during construction.

- Petroleum for fueling vehicles will be stored in above ground storage tanks. Tanks will either be steel with an enclosure capable of holding 110% of the storage tank volume or of a Con-Store, concrete encased type typically employed by NYSDOT. Hydraulic oil and other oils will be stored in their original containers. Concrete and asphalt will be stored in the original delivery trucks.
- Fertilizer may be stored on site in its original container for a short period of time prior to seeding. Original containers will be safely piled on pallets or similar devices to protect from moisture.

- Paints and other similar materials will be stored in their original containers and all empty containers will be disposed of in accordance with label directions.
- Portable sanitary facilities, which contain chemical disinfectants (deodorants) will be located on-site, with the disinfectants held in the tank of the toilet.

Hazardous Products

These practices are used to reduce the risks associated with hazardous materials.

- Products will be kept in original containers unless they are not re-sealable.
- Original labels and material safety data sheets will be retained; they contain important product information.
- If surplus product must be disposed of, manufacturers' or local and State recommended methods for proper disposal will be followed.

Spill Prevention

The following product specific practices will be followed on site.

Petroleum Products:

- Construction personnel should be made aware that emergency telephone numbers are located in this SWPPP.
- The contractor shall immediately contact NYSDEC in the event of a spill, and shall take all appropriate steps to contain the spill, including construction of a dike around the spill and placing absorbent material over this spill.
- The contractor shall instruct personnel that spillage of fuels, oils, and similar chemicals must be avoided and will have arranged with a qualified spill remediation company to serve the site.
- Fuels, oils, and chemicals will be stored in appropriate and tightly capped containers. Containers shall not be disposed of on the project site.
- Fuels, oils, chemicals, material, equipment, and sanitary facilities will be stored/located away from trees and at least 100 feet from streams, wells, wet areas, and other environmentally sensitive sites.
- Dispose of chemical containers and surplus chemicals off the project site in accordance with label directions.
- Use tight connections and hoses with appropriate nozzles in all operations involving fuels, lubricating materials or chemicals.
- Use funnels when pouring fuels, lubricating materials or chemicals.
- Refueling and cleaning of construction equipment will take place in parking areas to provide rapid response to emergency situations.

- All on-site vehicles will be monitored for leaks and receive regular preventative maintenance to reduce the chance of leakage. Any vehicle leaking fuel or hydraulic fuel will be immediately scheduled for repairs and use will be discontinued until repairs are made.

Fertilizers:

- Fertilizer will be stored in its original containers on pallets with water resistant coverings.
- Proper delivery scheduling will minimize storage time.
- Any damaged containers will be repaired immediately upon discovery and any released fertilizer recovered to the fullest extent practicable.

Paints:

- All containers will be tightly sealed and stored when not required for use.
- Excess paint will not be discharged to the storm water system or wastewater system, but will be properly disposed of according to manufacturers' instructions or State and local regulations.

Concrete Trucks:

- Concrete trucks will be allowed to wash out or discharge surplus concrete or drum wash water only at designated locations on site.

Asphalt Trucks:

- Asphalt trucks shall not discharge surplus asphalt on the site.

Spill Control Practices

In addition to the good housekeeping and material management practices discussed in the previous sections of this plan, the following practices will be followed for spill prevention and cleanup. The construction manager or site superintendent responsible for the day-to-day site operations will be the spill prevention and cleanup coordinator. He will designate at least three other site personnel who will receive spill prevention and cleanup training. These individuals will each become responsible for a particular phase of prevention and cleanup. The names of responsible spill personnel will be posted in the material storage area and in the onsite construction office or trailer.

- Manufacturers' recommended methods for spill cleanup will be clearly posted and site personnel will be made aware of the procedures and the location of the information and cleanup supplies. Any spill in excess or suspected to be in excess of two gallons will be reported to the NYSDEC Regional Spill Response Unit. Notification to the

NYSDEC (1-800-457-7362) must be completed within two hours of the discovery of the spill.

- Materials and equipment necessary for spill cleanup will be kept in the material storage area onsite. Equipment and materials will include but not be limited to absorbent pads, brooms, dust pans, mops, rags, gloves, goggles, activated clay, sand, sawdust, and plastic and metal trash containers specifically for this purpose.
- All spills will be cleaned up immediately after discovery.
- The spill area will be kept well ventilated and personnel will wear appropriate protective clothing to prevent injury from contact with spilled substance.
- Spills of toxic or hazardous material will be reported to the appropriate State or local government agency, regardless of the size

10.0 CERTIFICATIONS

Preparer Certification of Compliance with Federal, State, and Local Regulations

This Stormwater Pollution Prevention Plan was prepared in accordance with the City of Saratoga Springs regulations.

Name: Douglas Heller Title: Professional Engineer

Signature: _____ Date: _____

Company Name: The LA Group, PC

Owner Pollution Prevention Plan Certification

I certify under penalty of law that this document and all attachments were prepared under my direction or supervision to assure that qualified personnel properly gathered and evaluated the information submitted. Based on my inquiry of the person or persons who are directly responsible for gathering the information, the information submitted is, to the best of my knowledge and belief, true, accurate, and complete. I am aware that false statements made herein are punishable as a Class A misdemeanor pursuant to Section 210.45 of the Penal Law.

I understand that SWPPP requires site inspections be conducted by a qualified professional once every seven (7) days. These inspections shall be performed by a qualified professional as defined in the SWPPP.

The Owner/Operator will be held financially responsible for any and all fines related to work tasks that are not specified by the Contractor(s)/Subcontractor(s) below.

Name: John Luke Hodorowski Title: Owner

Signature: _____ Date: _____

Company Name: John-Paul Builders, Inc.

Contractor and Subcontractor Certification

I hereby certify that I understand and agree to comply with the terms and conditions of the SWPPP and agree to implement any corrective actions identified by the qualified inspector during a site inspection. I also understand that the owner or operator must comply with the terms and conditions of the New York State Pollutant Discharge Elimination System ("SPDES") general permit for stormwater discharges from construction activities and that it is unlawful for any person to cause or contribute to a violation of water quality standards. Furthermore, I understand that certifying false, incorrect or inaccurate information is a violation of the referenced permit and the laws of the State of New York and could subject me to criminal, civil and/or administrative proceeding.

Name _____ Title _____

Signature _____ Date _____

Company Name _____
Address _____
City, State, Zip _____
Phone Number _____

SWPPP Components You Are Responsible For

1. _____
2. _____
3. _____
4. _____
5. _____
6. _____

Name of Trained Individual Responsible for SWPPP Implementation _____ Title _____

Signature of Trained Individual Responsible for SWPPP Implementation _____ Date _____

Contractor and Subcontractor Certification

I hereby certify that I understand and agree to comply with the terms and conditions of the SWPPP and agree to implement any corrective actions identified by the qualified inspector during a site inspection. I also understand that the owner or operator must comply with the terms and conditions of the New York State Pollutant Discharge Elimination System ("SPDES") general permit for stormwater discharges from construction activities and that it is unlawful for any person to cause or contribute to a violation of water quality standards. Furthermore, I understand that certifying false, incorrect or inaccurate information is a violation of the referenced permit and the laws of the State of New York and could subject me to criminal, civil and/or administrative proceeding.

Name _____ Title _____

Signature _____ Date _____

Company Name _____
Address _____
City, State, Zip _____
Phone Number _____

SWPPP Components You Are Responsible For

1. _____
2. _____
3. _____
4. _____
5. _____
6. _____

Name of Trained Individual Responsible for SWPPP Implementation _____ Title _____

Signature of Trained Individual Responsible for SWPPP Implementation _____ Date _____

Contractor and Subcontractor Certification

I hereby certify that I understand and agree to comply with the terms and conditions of the SWPPP and agree to implement any corrective actions identified by the qualified inspector during a site inspection. I also understand that the owner or operator must comply with the terms and conditions of the New York State Pollutant Discharge Elimination System ("SPDES") general permit for stormwater discharges from construction activities and that it is unlawful for any person to cause or contribute to a violation of water quality standards. Furthermore, I understand that certifying false, incorrect or inaccurate information is a violation of the referenced permit and the laws of the State of New York and could subject me to criminal, civil and/or administrative proceeding.

Name _____ Title _____

Signature _____ Date _____

Company Name _____
Address _____
City, State, Zip _____
Phone Number _____

SWPPP Components You Are Responsible For

1. _____
2. _____
3. _____
4. _____
5. _____
6. _____

Name of Trained Individual Responsible for SWPPP Implementation _____ Title _____

Signature of Trained Individual Responsible for SWPPP Implementation _____ Date _____

Contractor and Subcontractor Certification

I hereby certify that I understand and agree to comply with the terms and conditions of the SWPPP and agree to implement any corrective actions identified by the qualified inspector during a site inspection. I also understand that the owner or operator must comply with the terms and conditions of the New York State Pollutant Discharge Elimination System ("SPDES") general permit for stormwater discharges from construction activities and that it is unlawful for any person to cause or contribute to a violation of water quality standards. Furthermore, I understand that certifying false, incorrect or inaccurate information is a violation of the referenced permit and the laws of the State of New York and could subject me to criminal, civil and/or administrative proceeding.

Name _____ Title _____

Signature _____ Date _____

Company Name _____
Address _____
City, State, Zip _____
Phone Number _____

SWPPP Components You Are Responsible For

1. _____
2. _____
3. _____
4. _____
5. _____
6. _____

Name of Trained Individual Responsible for SWPPP Implementation _____ Title _____

Signature of Trained Individual Responsible for SWPPP Implementation _____ Date _____

11.0 DEFINITIONS

Construction Activity(ies) - means any clearing, grading, excavation, filling, demolition, or stockpiling activities that result in soil disturbance. Clearing activities can include, but are not limited to, logging equipment operation, the cutting and skidding of trees, tree removal, stump removal and/or brush removal. Construction activity does not include routine maintenance that is performed to maintain the original line and grade, hydraulic capacity, or original purpose of a facility.

Construction Phasing Plan - a plan designed to construct particular portions of an individual project at different times. Phasing is often used when a project is very large to limit the disturbance at a single time to 5 acres per phase.

Erosion and Sediment Control Practices – temporary measures installed prior to construction and maintained during construction to temporarily treat any stormwater runoff. Once construction is completed and post-construction stormwater management practices are installed and the site is stabilized, the erosion and sediment control practices are removed from the site.

Final Stabilization - means that all soil disturbance activities have ceased and a uniform, perennial vegetative cover with a density of eighty (80) percent over the entire pervious surface has been established; or other equivalent stabilization measures, such as permanent landscape mulches, rock rip-rap or washed/crushed stone have been applied on all disturbed areas that are not covered by permanent structures, concrete pavement.

Green Infrastructure – in the context of stormwater management, the term green infrastructure includes a wide array of practices at multiple scales to manage and treat stormwater, maintain and restore natural hydrology and ecological function by infiltration, evapotranspiration, capture and reuse of stormwater, and establishment of natural vegetative features. On a regional scale, green infrastructure is the preservation and restoration of natural landscape features, such as forests, floodplains and wetlands, coupled with policies such as infill and redevelopment that reduce overall imperviousness in a watershed or ecoregion. On the local scale green infrastructure consist of site and neighborhood specific practices and runoff reduction techniques. Such practices essentially result in runoff reduction and or establishment of habitat areas with significant utilization of soils, vegetation, and engineered media rather than traditional hardscape collection, conveyance and storage structures. Some examples include green roofs, trees and tree boxes, pervious pavement, rain gardens, vegetated swales, planters, reforestation and protection and enhancement of riparian buffers and floodplains.

Impervious Area (Cover) - means all impermeable surfaces that cannot effectively infiltrate rainfall. This includes paved, concrete and gravel surfaces (i.e. parking lots, driveways, roads, runways, and sidewalks); building rooftops, and miscellaneous impermeable structures such as patios, pools, and sheds.

Municipal Separate Storm Sewer (MS4) – a conveyance or system of conveyances (including roads with drainage systems, municipal streets, catch basins, curbs, gutters, ditches, man-made channels, or storm drains):

i. Owned or operated by a state, city, town, borough, county, parish, district, association, or other public body (created by or pursuant to State law) having jurisdiction over disposal of sewage, industrial wastes, stormwater, or other wastes, including special districts under State law such as a sewer district, flood control district or drainage district, or similar entity, or an Indian tribe or an authorized Indian tribal organization, or a designated and approved management agency under section 208 of the CWA that discharges to surface waters of the State.
ii. Designed or used for collecting or conveying stormwater
iii. Which is not a combined sewer
iv. Which is not part of a Publicly Owned Treatment Works (POTW) as defined at 40 CFR 122.2.

Notice of Intent – a standardized format notification sent to the NYSDEC to inform them of the proposed activity to be sent after the SWPPP has been completed.

Owner or Operator – means the person, persons or legal entity which owns or leases the property on which the construction activity is occurring; and/or an entity that has operational control over the construction plans and specifications, including the ability to make modifications to the plans and specifications.

Post-Construction Stormwater Management Practices – permanent devices constructed or installed onsite to treat stormwater from a site when construction is completed.

Qualified Inspector - a Licensed Professional Engineer, Certified Professional in Erosion and Sediment Control (CPESC), Registered Landscape Architect, or someone working under the direct supervision of, and at the same company as, the licensed Professional Engineer or Registered Landscape Architect, provided they have received 4 hours of Department endorsed training in proper erosion and sediment control principles from a Soil and Water Conservation District, or other Department endorsed entity. After receiving the initial training, the qualified inspector shall receive 4 hours of training every 3 years.

Regulated, Traditional Land Use Control MS4 - means a city, town, or village with land use control authority that is required to gain coverage under New York State DEC's SPDES General Permit for Stormwater Discharges from Municipal Separate Stormwater Sewer Systems (MS4s).

Sequence of Operations – the individual steps and their specific order which are undertaken in order to construct a project or a given phase of a project from beginning to end. (i.e. clearing, grading, foundation work, landscaping, etc.)

State Pollutant Discharge Elimination System (SPDES) – means the system established pursuant to Article 17 of the Environmental Conservation Law (ECL) and 6 NYCRR Part 750 for issuance of permits authorizing discharges to the waters of the state.

Stormwater Pollution Prevention Plan (SWPPP) - a report that is compiled providing detailed information about the proposed activity and the specifics to how the stormwater will be managed during construction and after construction is completed.

Surface Waters of the State - shall be construed to include lakes, bays, sounds, ponds, impounding reservoirs, springs, rivers, streams, creeks, estuaries, marshes, inlets, canals, the Atlantic Ocean, within the territorial seas of the state of New York and all other bodies of surface water, natural or artificial, inland or coastal, fresh or salt, public or private (except those private waters that do not combine or effect a junction with natural surface or underground waters), which are wholly or partially within or bordering the state or within its jurisdiction. Waters of the state are further defined in 6 NYCRR Parts 800-941.

Temporary Stabilization – means that exposed soil has been covered with material(s) as set forth in the technical standard, New York Standards and Specifications for Erosion and Sediment Control, to prevent the exposed soil from eroding. The materials can include, but are not limited to, mulch, seed and mulch, and erosion control mats (e.g. jute twisted yarn, excelsior wood fiber mats).

Trained Contractor – means an employee from a contracting (construction) company responsible for the day to day implementation of the SWPPP. The trained contractor must have received 4 hours of Department endorsed training in proper erosion and sediment control principles from a Soil and Water Conservation District, or other Department endorsed entity. After receiving the initial training, the qualified inspector shall receive 4 hours of training every 3 years.

It can also mean an employee from the contracting (construction) company that meets the qualified inspector qualifications (e.g. licensed Professional Engineer, Certified Professional in Erosion and Sediment Control (CPESC), Registered Landscape Architect, or someone working under the direct supervision of, and at the same company as, the licensed Professional Engineer or Registered Landscape Architect, provided they have received 4 hours of Department endorsed training in proper erosion and sediment control principles from a Soil and Water Conservation District, or other Department endorsed entity.

Appendix A

HydroCAD Calculations and Storm Data

HYDROCAD CALCULATIONS
PRE DEVELOPMENT

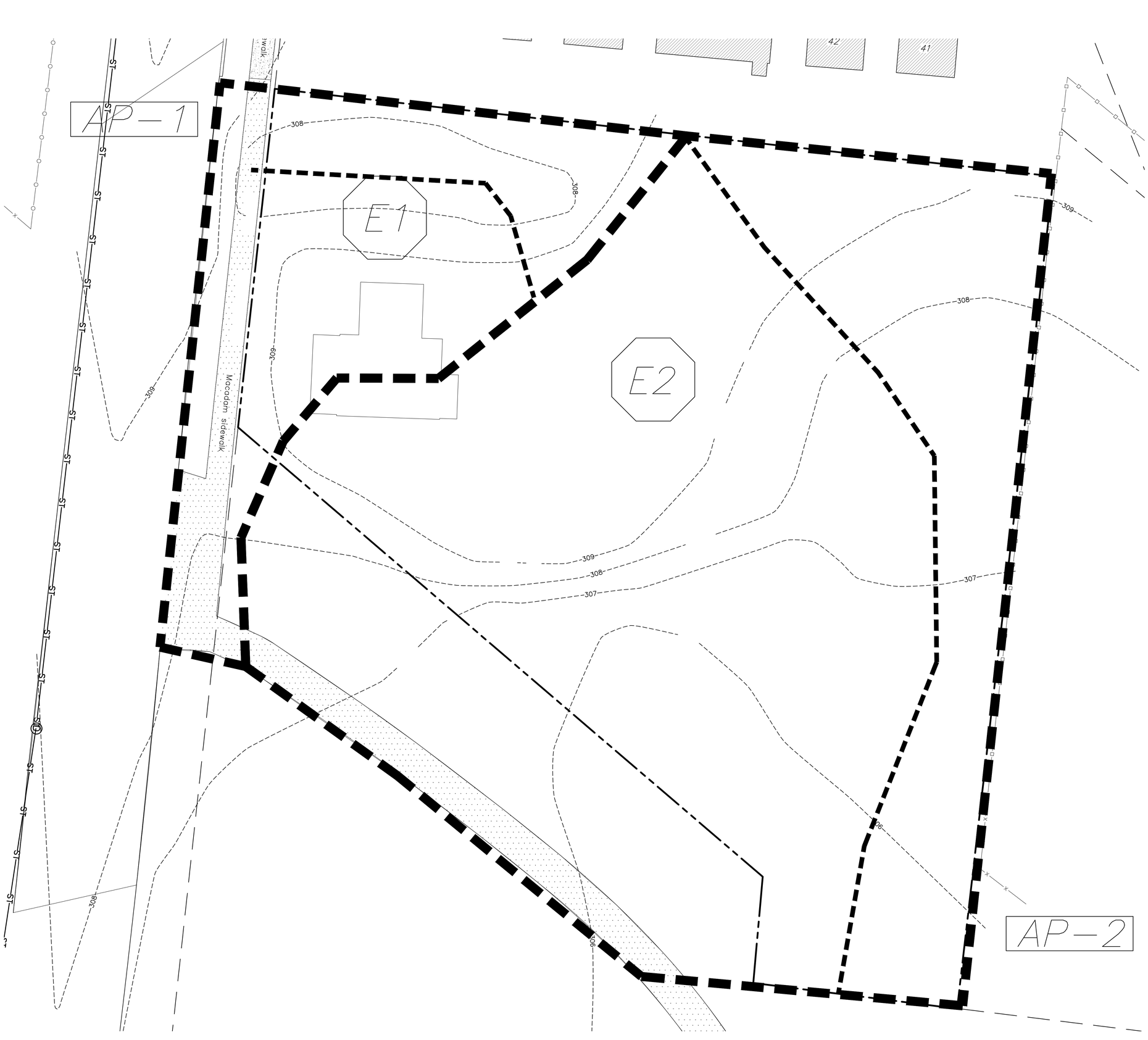

LEGEND

- SUBCATCHMENT BOUNDARY
- TIME OF CONCENTRATION PATH
- E1 — SUBCATCHMENT ID
- AP-1 — ANALYSIS POINT

GRAPHIC SCALE

10 0 5 10 20

1 inch = 10 feet

Approval

Approved under authority of a resolution adopted _____ by the Planning Board of the City of Saratoga Springs.

_____ Chairperson

Date Signed _____

the LA group
Landscape Architecture and Engineering, PC

40 Long Alley
Saratoga Springs
New York 12866

P 518/587-8100
F 518/587-0180
www.thelagroup.com

Unauthorized alteration or addition to this document is a violation of Section 7209 of the New York State Education Law

© the LA Group 2008

Design MCB

Drawn MCB

Checked CMI

PREPARED FOR:
John-Paul Builders, LLC
796 Burdeck Street
Schenectady, NY 12306

246 WEST AVENUE APARTMENTS

SARATOGA SPRINGS, NY

Title
EXISTING CONDITIONS WATERSHED MAP

Revisions

City #:
Project: 201178
Date: 6/23/2016

Drawing
W-1

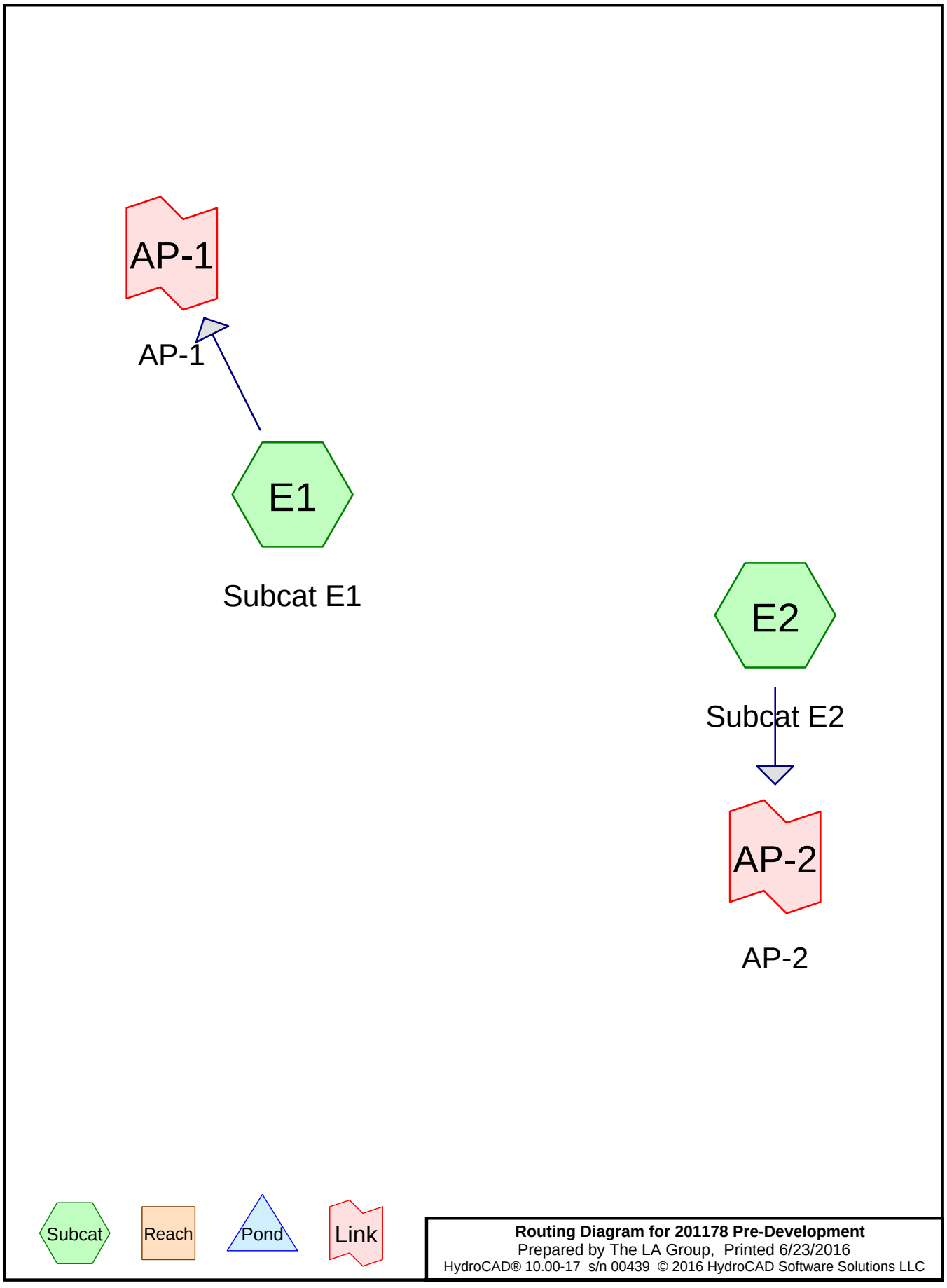

Routing Diagram for 201178 Pre-Development
Prepared by The LA Group, Printed 6/23/2016
HydroCAD® 10.00-17 s/n 00439 © 2016 HydroCAD Software Solutions LLC

Area Listing (all nodes)

Area (sq-ft)	CN	Description (subcatchment-numbers)
19,423	39	>75% Grass cover, Good, HSG A (E1, E2)
2,705	98	Paved parking, HSG A (E1, E2)
9,702	30	Woods, Good, HSG A (E2)
31,830	**41**	**TOTAL AREA**

Soil Listing (all nodes)

Area (sq-ft)	Soil Group	Subcatchment Numbers
31,830	HSG A	E1, E2
0	HSG B	
0	HSG C	
0	HSG D	
0	Other	
31,830		**TOTAL AREA**

Ground Covers (all nodes)

HSG-A (sq-ft)	HSG-B (sq-ft)	HSG-C (sq-ft)	HSG-D (sq-ft)	Other (sq-ft)	Total (sq-ft)	Ground Cover	Sub Num
19,423	0	0	0	0	19,423	>75% Grass cover, Good	
2,705	0	0	0	0	2,705	Paved parking	
9,702	0	0	0	0	9,702	Woods, Good	
31,830	**0**	**0**	**0**	**0**	**31,830**	**TOTAL AREA**	

Time span=0.00-24.00 hrs, dt=0.05 hrs, 481 points
Runoff by SCS TR-20 method, UH=SCS, Weighted-Q
Reach routing by Stor-Ind+Trans method - Pond routing by Stor-Ind method

Subcatchment E1: Subcat E1 Runoff Area=6,599 sf 22.24% Impervious Runoff Depth>0.43"
Flow Length=80' Slope=0.0190 '/' Tc=9.3 min CN=WQ Runoff=0.09 cfs 235 cf

Subcatchment E2: Subcat E2 Runoff Area=25,231 sf 4.91% Impervious Runoff Depth>0.09"
Flow Length=215' Tc=12.3 min CN=WQ Runoff=0.07 cfs 198 cf

Link AP-1: AP-1 Inflow=0.09 cfs 235 cf
Primary=0.09 cfs 235 cf

Link AP-2: AP-2 Inflow=0.07 cfs 198 cf
Primary=0.07 cfs 198 cf

Total Runoff Area = 31,830 sf Runoff Volume = 433 cf Average Runoff Depth = 0.16"
91.50% Pervious = 29,125 sf 8.50% Impervious = 2,705 sf

Time span=0.00-24.00 hrs, dt=0.05 hrs, 481 points
Runoff by SCS TR-20 method, UH=SCS, Weighted-Q
Reach routing by Stor-Ind+Trans method - Pond routing by Stor-Ind method

Subcatchment E1: Subcat E1 Runoff Area=6,599 sf 22.24% Impervious Runoff Depth>0.80"
Flow Length=80' Slope=0.0190 '/' Tc=9.3 min CN=WQ Runoff=0.16 cfs 439 cf

Subcatchment E2: Subcat E2 Runoff Area=25,231 sf 4.91% Impervious Runoff Depth>0.19"
Flow Length=215' Tc=12.3 min CN=WQ Runoff=0.12 cfs 390 cf

Link AP-1: AP-1 Inflow=0.16 cfs 439 cf
Primary=0.16 cfs 439 cf

Link AP-2: AP-2 Inflow=0.12 cfs 390 cf
Primary=0.12 cfs 390 cf

Total Runoff Area = 31,830 sf Runoff Volume = 829 cf Average Runoff Depth = 0.31"
91.50% Pervious = 29,125 sf 8.50% Impervious = 2,705 sf

Time span=0.00-24.00 hrs, dt=0.05 hrs, 481 points
Runoff by SCS TR-20 method, UH=SCS, Weighted-Q
Reach routing by Stor-Ind+Trans method - Pond routing by Stor-Ind method

Subcatchment E1: Subcat E1 Runoff Area=6,599 sf 22.24% Impervious Runoff Depth>1.71"
Flow Length=80' Slope=0.0190 '/' Tc=9.3 min CN=WQ Runoff=0.29 cfs 943 cf

Subcatchment E2: Subcat E2 Runoff Area=25,231 sf 4.91% Impervious Runoff Depth>0.61"
Flow Length=215' Tc=12.3 min CN=WQ Runoff=0.28 cfs 1,286 cf

Link AP-1: AP-1 Inflow=0.29 cfs 943 cf
Primary=0.29 cfs 943 cf

Link AP-2: AP-2 Inflow=0.28 cfs 1,286 cf
Primary=0.28 cfs 1,286 cf

Total Runoff Area = 31,830 sf Runoff Volume = 2,228 cf Average Runoff Depth = 0.84"
91.50% Pervious = 29,125 sf 8.50% Impervious = 2,705 sf

Summary for Subcatchment E1: Subcat E1

Runoff = 0.29 cfs @ 12.01 hrs, Volume= 943 cf, Depth> 1.71"

Runoff by SCS TR-20 method, UH=SCS, Weighted-Q, Time Span= 0.00-24.00 hrs, dt= 0.05 hrs
Type II 24-hr 100 Year Rainfall=6.20"

Area (sf)	CN	Description
5,132	39	>75% Grass cover, Good, HSG A
1,468	98	Paved parking, HSG A
6,599		Weighted Average
5,132		77.76% Pervious Area
1,468		22.24% Impervious Area

Tc (min)	Length (feet)	Slope (ft/ft)	Velocity (ft/sec)	Capacity (cfs)	Description
9.3	80	0.0190	0.14		**Sheet Flow,** Grass: Short n= 0.150 P2= 2.60"

Summary for Subcatchment E2: Subcat E2

Runoff = 0.28 cfs @ 12.06 hrs, Volume= 1,286 cf, Depth> 0.61"

Runoff by SCS TR-20 method, UH=SCS, Weighted-Q, Time Span= 0.00-24.00 hrs, dt= 0.05 hrs
Type II 24-hr 100 Year Rainfall=6.20"

Area (sf)	CN	Description
14,291	39	>75% Grass cover, Good, HSG A
1,238	98	Paved parking, HSG A
9,702	30	Woods, Good, HSG A
25,231		Weighted Average
23,993		95.09% Pervious Area
1,238		4.91% Impervious Area

Tc (min)	Length (feet)	Slope (ft/ft)	Velocity (ft/sec)	Capacity (cfs)	Description
9.2	100	0.0300	0.18		**Sheet Flow,** Grass: Short n= 0.150 P2= 2.60"
3.1	115	0.0150	0.61		**Shallow Concentrated Flow,** Woodland Kv= 5.0 fps
12.3	215	Total			

Summary for Link AP-1: AP-1

Inflow Area = 6,599 sf, 22.24% Impervious, Inflow Depth > 1.71" for 100 Year event
Inflow = 0.29 cfs @ 12.01 hrs, Volume= 943 cf
Primary = 0.29 cfs @ 12.01 hrs, Volume= 943 cf, Atten= 0%, Lag= 0.0 min

Primary outflow = Inflow, Time Span= 0.00-24.00 hrs, dt= 0.05 hrs

Summary for Link AP-2: AP-2

Inflow Area = 25,231 sf, 4.91% Impervious, Inflow Depth > 0.61" for 100 Year event
Inflow = 0.28 cfs @ 12.06 hrs, Volume= 1,286 cf
Primary = 0.28 cfs @ 12.06 hrs, Volume= 1,286 cf, Atten= 0%, Lag= 0.0 min

Primary outflow = Inflow, Time Span= 0.00-24.00 hrs, dt= 0.05 hrs

HYDROCAD CALCULATIONS
POST DEVELOPMENT

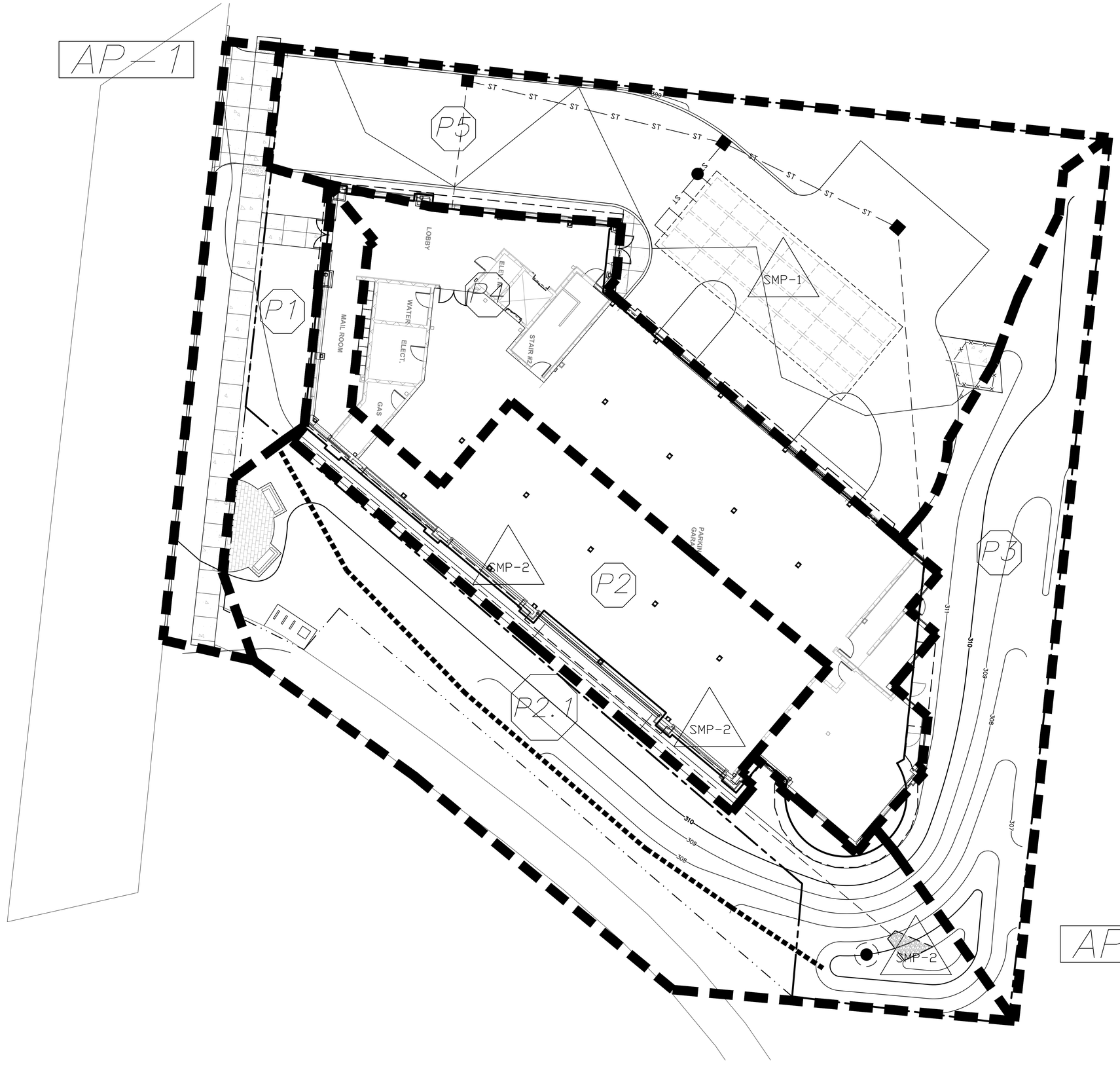

LEGEND

	SUBCATCHMENT BOUNDARY
	TIME OF CONCENTRATION PATH
P1	SUBCATCHMENT ID
SMP1	STORMWATER FACILITY
AP-1	ANALYSIS POINT

GRAPHIC SCALE

10 0 5 10 20

1 inch = 10 feet

Approval

Approved under authority of a resolution adopted _____ by the Planning Board of the City of Saratoga Springs.

_____ Chairperson

Date Signed _____

the LA group
Landscape Architecture and Engineering, PC
40 Long Alley
Saratoga Springs
New York 12866
P 518/587-8100
F 518/587-0180
www.thelagroup.com

Unauthorized alteration or addition to this document is a violation of Section 7209 of the New York State Education Law

© the LA Group 2008

Design MCB

Drawn MCB

Checked CMI

PREPARED FOR:
John-Paul Builders, LLC
796 Burdeck Street
Schenectady, NY 12306

246 WEST AVENUE APARTMENTS

SARATOGA SPRINGS, NY

Title
PROPOSED CONDITIONS WATERSHED MAP

Revisions

City #:
Project: 201178
Date: 6/23/2016

Drawing
W-2

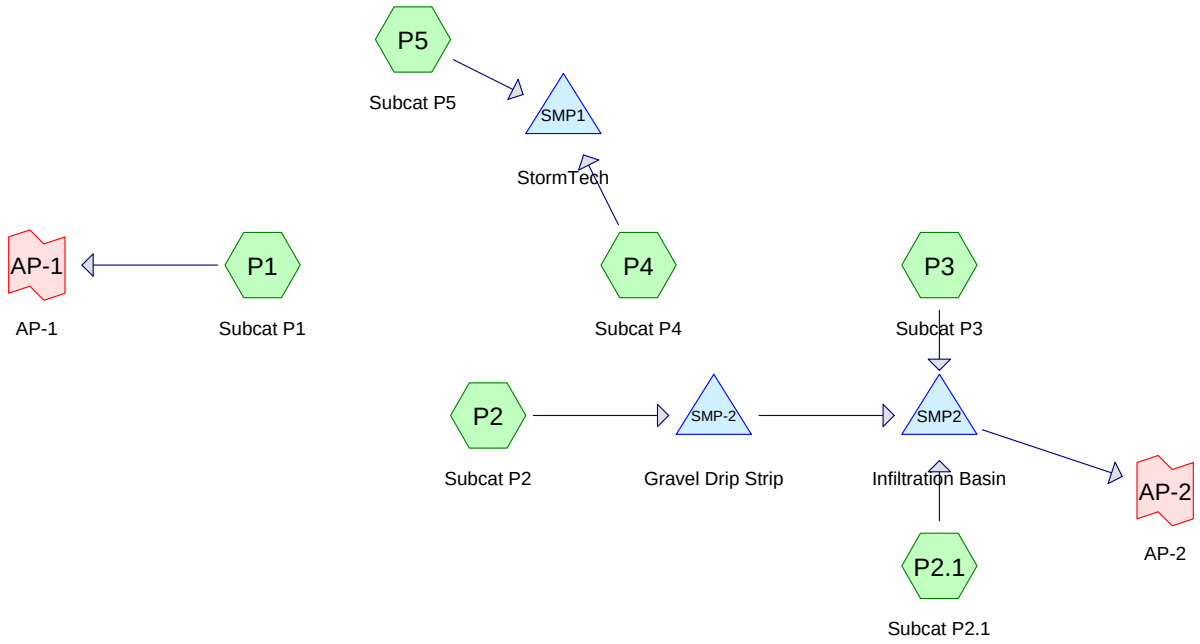

Subcat Reach Pond Link

Routing Diagram for 201178 Post-Development
Prepared by The LA Group, Printed 6/23/2016
HydroCAD® 10.00-17 s/n 00439 © 2016 HydroCAD Software Solutions LLC

Area Listing (selected nodes)

Area (sq-ft)	CN	Description (subcatchment-numbers)
14,181	39	>75% Grass cover, Good, HSG A (P1, P2, P2.1, P3, P4, P5)
17,663	98	Paved parking, HSG A (P1, P2, P2.1, P3, P4, P5)
31,844	**72**	**TOTAL AREA**

Soil Listing (selected nodes)

Area (sq-ft)	Soil Group	Subcatchment Numbers
31,844	HSG A	P1, P2, P2.1, P3, P4, P5
0	HSG B	
0	HSG C	
0	HSG D	
0	Other	
31,844		**TOTAL AREA**

Ground Covers (selected nodes)

HSG-A (sq-ft)	HSG-B (sq-ft)	HSG-C (sq-ft)	HSG-D (sq-ft)	Other (sq-ft)	Total (sq-ft)	Ground Cover	Sub Num
14,181	0	0	0	0	14,181	>75% Grass cover, Good	
17,663	0	0	0	0	17,663	Paved parking	
31,844	**0**	**0**	**0**	**0**	**31,844**	**TOTAL AREA**	

Time span=0.00-24.00 hrs, dt=0.05 hrs, 481 points
Runoff by SCS TR-20 method, UH=SCS, Weighted-Q
Reach routing by Stor-Ind+Trans method - Pond routing by Stor-Ind method

Subcatchment P1: Subcat P1 Runoff Area=2,357 sf 40.48% Impervious Runoff Depth>0.78"
Tc=6.0 min CN=WQ Runoff=0.06 cfs 153 cf

Subcatchment P2: Subcat P2 Runoff Area=4,076 sf 84.94% Impervious Runoff Depth>1.63"
Tc=6.0 min CN=WQ Runoff=0.23 cfs 554 cf

Subcatchment P2.1: Subcat P2.1 Runoff Area=7,028 sf 16.75% Impervious Runoff Depth>0.32"
Flow Length=160' Slope=0.0250 '/' Tc=10.3 min CN=WQ Runoff=0.07 cfs 188 cf

Subcatchment P3: Subcat P3 Runoff Area=4,048 sf 1.07% Impervious Runoff Depth>0.02"
Tc=6.0 min CN=WQ Runoff=0.00 cfs 7 cf

Subcatchment P4: Subcat P4 Runoff Area=6,146 sf 99.96% Impervious Runoff Depth>1.92"
Tc=6.0 min CN=WQ Runoff=0.41 cfs 984 cf

Subcatchment P5: Subcat P5 Runoff Area=8,189 sf 71.84% Impervious Runoff Depth>1.38"
Tc=6.0 min CN=WQ Runoff=0.39 cfs 942 cf

Pond SMP-2: Gravel Drip Strip Peak Elev=309.55' Storage=63 cf Inflow=0.23 cfs 554 cf
Discarded=0.08 cfs 506 cf Primary=0.11 cfs 48 cf Outflow=0.19 cfs 554 cf

Pond SMP1: StormTech Peak Elev=304.84' Storage=521 cf Inflow=0.81 cfs 1,926 cf
Outflow=0.16 cfs 1,925 cf

Pond SMP2: Infiltration Basin Peak Elev=304.27' Storage=104 cf Inflow=0.18 cfs 243 cf
Discarded=0.03 cfs 241 cf Primary=0.00 cfs 0 cf Outflow=0.03 cfs 241 cf

Link AP-1: AP-1 Inflow=0.06 cfs 153 cf
Primary=0.06 cfs 153 cf

Link AP-2: AP-2 Inflow=0.00 cfs 0 cf
Primary=0.00 cfs 0 cf

Total Runoff Area = 31,844 sf Runoff Volume = 2,828 cf Average Runoff Depth = 1.07"
44.53% Pervious = 14,181 sf 55.47% Impervious = 17,663 sf

Time span=0.00-24.00 hrs, dt=0.05 hrs, 481 points
Runoff by SCS TR-20 method, UH=SCS, Weighted-Q
Reach routing by Stor-Ind+Trans method - Pond routing by Stor-Ind method

Subcatchment P1: Subcat P1 Runoff Area=2,357 sf 40.48% Impervious Runoff Depth>1.44"
Tc=6.0 min CN=WQ Runoff=0.11 cfs 282 cf

Subcatchment P2: Subcat P2 Runoff Area=4,076 sf 84.94% Impervious Runoff Depth>2.99"
Tc=6.0 min CN=WQ Runoff=0.41 cfs 1,015 cf

Subcatchment P2.1: Subcat P2.1 Runoff Area=7,028 sf 16.75% Impervious Runoff Depth>0.61"
Flow Length=160' Slope=0.0250 '/' Tc=10.3 min CN=WQ Runoff=0.12 cfs 356 cf

Subcatchment P3: Subcat P3 Runoff Area=4,048 sf 1.07% Impervious Runoff Depth>0.06"
Tc=6.0 min CN=WQ Runoff=0.01 cfs 21 cf

Subcatchment P4: Subcat P4 Runoff Area=6,146 sf 99.96% Impervious Runoff Depth>3.51"
Tc=6.0 min CN=WQ Runoff=0.73 cfs 1,799 cf

Subcatchment P5: Subcat P5 Runoff Area=8,189 sf 71.84% Impervious Runoff Depth>2.53"
Tc=6.0 min CN=WQ Runoff=0.70 cfs 1,727 cf

Pond SMP-2: Gravel Drip Strip Peak Elev=309.71' Storage=86 cf Inflow=0.41 cfs 1,015 cf
Discarded=0.08 cfs 802 cf Primary=0.31 cfs 213 cf Outflow=0.39 cfs 1,015 cf

Pond SMP1: StormTech Peak Elev=305.56' Storage=1,153 cf Inflow=1.43 cfs 3,525 cf
Outflow=0.17 cfs 3,524 cf

Pond SMP2: Infiltration Basin Peak Elev=305.15' Storage=290 cf Inflow=0.44 cfs 589 cf
Discarded=0.08 cfs 590 cf Primary=0.00 cfs 0 cf Outflow=0.08 cfs 590 cf

Link AP-1: AP-1 Inflow=0.11 cfs 282 cf
Primary=0.11 cfs 282 cf

Link AP-2: AP-2 Inflow=0.00 cfs 0 cf
Primary=0.00 cfs 0 cf

Total Runoff Area = 31,844 sf Runoff Volume = 5,198 cf Average Runoff Depth = 1.96"
44.53% Pervious = 14,181 sf 55.47% Impervious = 17,663 sf

Time span=0.00-24.00 hrs, dt=0.05 hrs, 481 points
Runoff by SCS TR-20 method, UH=SCS, Weighted-Q
Reach routing by Stor-Ind+Trans method - Pond routing by Stor-Ind method

Subcatchment P1: Subcat P1 Runoff Area=2,357 sf 40.48% Impervious Runoff Depth>2.71"
Tc=6.0 min CN=WQ Runoff=0.20 cfs 533 cf

Subcatchment P2: Subcat P2 Runoff Area=4,076 sf 84.94% Impervious Runoff Depth>5.14"
Tc=6.0 min CN=WQ Runoff=0.69 cfs 1,744 cf

Subcatchment P2.1: Subcat P2.1 Runoff Area=7,028 sf 16.75% Impervious Runoff Depth>1.41"
Flow Length=160' Slope=0.0250 '/' Tc=10.3 min CN=WQ Runoff=0.24 cfs 828 cf

Subcatchment P3: Subcat P3 Runoff Area=4,048 sf 1.07% Impervious Runoff Depth>0.56"
Tc=6.0 min CN=WQ Runoff=0.05 cfs 189 cf

Subcatchment P4: Subcat P4 Runoff Area=6,146 sf 99.96% Impervious Runoff Depth>5.95"
Tc=6.0 min CN=WQ Runoff=1.21 cfs 3,050 cf

Subcatchment P5: Subcat P5 Runoff Area=8,189 sf 71.84% Impervious Runoff Depth>4.42"
Tc=6.0 min CN=WQ Runoff=1.17 cfs 3,017 cf

Pond SMP-2: Gravel Drip Strip Peak Elev=309.95' Storage=118 cf Inflow=0.69 cfs 1,744 cf
Discarded=0.08 cfs 1,246 cf Primary=0.56 cfs 499 cf Outflow=0.64 cfs 1,744 cf

Pond SMP1: StormTech Peak Elev=307.10' Storage=2,253 cf Inflow=2.39 cfs 6,067 cf
Outflow=0.18 cfs 6,065 cf

Pond SMP2: Infiltration Basin Peak Elev=305.97' Storage=662 cf Inflow=0.83 cfs 1,516 cf
Discarded=0.14 cfs 1,435 cf Primary=0.00 cfs 0 cf Outflow=0.14 cfs 1,435 cf

Link AP-1: AP-1 Inflow=0.20 cfs 533 cf
Primary=0.20 cfs 533 cf

Link AP-2: AP-2 Inflow=0.00 cfs 0 cf
Primary=0.00 cfs 0 cf

Total Runoff Area = 31,844 sf Runoff Volume = 9,361 cf Average Runoff Depth = 3.53"
44.53% Pervious = 14,181 sf 55.47% Impervious = 17,663 sf

Summary for Subcatchment P1: Subcat P1

Runoff = 0.20 cfs @ 11.97 hrs, Volume= 533 cf, Depth> 2.71"

Runoff by SCS TR-20 method, UH=SCS, Weighted-Q, Time Span= 0.00-24.00 hrs, dt= 0.05 hrs
Type II 24-hr 100 Year Rainfall=6.20"

Area (sf)	CN	Description
1,403	39	>75% Grass cover, Good, HSG A
954	98	Paved parking, HSG A
2,357		Weighted Average
1,403		59.52% Pervious Area
954		40.48% Impervious Area

Tc (min)	Length (feet)	Slope (ft/ft)	Velocity (ft/sec)	Capacity (cfs)	Description
6.0					**Direct Entry,**

Summary for Subcatchment P2: Subcat P2

Runoff = 0.69 cfs @ 11.96 hrs, Volume= 1,744 cf, Depth> 5.14"

Runoff by SCS TR-20 method, UH=SCS, Weighted-Q, Time Span= 0.00-24.00 hrs, dt= 0.05 hrs
Type II 24-hr 100 Year Rainfall=6.20"

Area (sf)	CN	Description
614	39	>75% Grass cover, Good, HSG A
3,462	98	Paved parking, HSG A
4,076		Weighted Average
614		15.06% Pervious Area
3,462		84.94% Impervious Area

Tc (min)	Length (feet)	Slope (ft/ft)	Velocity (ft/sec)	Capacity (cfs)	Description
6.0					**Direct Entry,**

Summary for Subcatchment P2.1: Subcat P2.1

Runoff = 0.24 cfs @ 12.03 hrs, Volume= 828 cf, Depth> 1.41"

Runoff by SCS TR-20 method, UH=SCS, Weighted-Q, Time Span= 0.00-24.00 hrs, dt= 0.05 hrs
Type II 24-hr 100 Year Rainfall=6.20"

Area (sf)	CN	Description
5,851	39	>75% Grass cover, Good, HSG A
1,177	98	Paved parking, HSG A
7,028		Weighted Average
5,851		83.25% Pervious Area
1,177		16.75% Impervious Area

Tc (min)	Length (feet)	Slope (ft/ft)	Velocity (ft/sec)	Capacity (cfs)	Description
9.9	100	0.0250	0.17		**Sheet Flow,** Grass: Short n= 0.150 P2= 2.60"
0.4	60	0.0250	2.37		**Shallow Concentrated Flow,** Grassed Waterway Kv= 15.0 fps
10.3	160	Total			

Summary for Subcatchment P3: Subcat P3

Runoff = 0.05 cfs @ 12.01 hrs, Volume= 189 cf, Depth> 0.56"

Runoff by SCS TR-20 method, UH=SCS, Weighted-Q, Time Span= 0.00-24.00 hrs, dt= 0.05 hrs
Type II 24-hr 100 Year Rainfall=6.20"

Area (sf)	CN	Description
4,004	39	>75% Grass cover, Good, HSG A
43	98	Paved parking, HSG A
4,048		Weighted Average
4,004		98.93% Pervious Area
43		1.07% Impervious Area

Tc (min)	Length (feet)	Slope (ft/ft)	Velocity (ft/sec)	Capacity (cfs)	Description
6.0					**Direct Entry,**

Summary for Subcatchment P4: Subcat P4

Runoff = 1.21 cfs @ 11.96 hrs, Volume= 3,050 cf, Depth> 5.95"

Runoff by SCS TR-20 method, UH=SCS, Weighted-Q, Time Span= 0.00-24.00 hrs, dt= 0.05 hrs
Type II 24-hr 100 Year Rainfall=6.20"

Area (sf)	CN	Description
3	39	>75% Grass cover, Good, HSG A
6,144	98	Paved parking, HSG A
6,146		Weighted Average
3		0.04% Pervious Area
6,144		99.96% Impervious Area

Tc (min)	Length (feet)	Slope (ft/ft)	Velocity (ft/sec)	Capacity (cfs)	Description
6.0					**Direct Entry,**

Summary for Subcatchment P5: Subcat P5

Runoff = 1.17 cfs @ 11.96 hrs, Volume= 3,017 cf, Depth> 4.42"

Runoff by SCS TR-20 method, UH=SCS, Weighted-Q, Time Span= 0.00-24.00 hrs, dt= 0.05 hrs
Type II 24-hr 100 Year Rainfall=6.20"

Area (sf)	CN	Description
2,306	39	>75% Grass cover, Good, HSG A
5,883	98	Paved parking, HSG A
8,189		Weighted Average
2,306		28.16% Pervious Area
5,883		71.84% Impervious Area

Tc (min)	Length (feet)	Slope (ft/ft)	Velocity (ft/sec)	Capacity (cfs)	Description
6.0					**Direct Entry,**

Summary for Pond SMP-2: Gravel Drip Strip

Inflow Area = 4,076 sf, 84.94% Impervious, Inflow Depth > 5.14" for 100 Year event
Inflow = 0.69 cfs @ 11.96 hrs, Volume= 1,744 cf
Outflow = 0.64 cfs @ 11.99 hrs, Volume= 1,744 cf, Atten= 7%, Lag= 1.9 min
Discarded = 0.08 cfs @ 11.65 hrs, Volume= 1,246 cf
Primary = 0.56 cfs @ 11.99 hrs, Volume= 499 cf

Routing by Stor-Ind method, Time Span= 0.00-24.00 hrs, dt= 0.05 hrs
Peak Elev= 309.95' @ 11.99 hrs Surf.Area= 350 sf Storage= 118 cf

Plug-Flow detention time= 2.3 min calculated for 1,744 cf (100% of inflow)
Center-of-Mass det. time= 2.2 min (745.3 - 743.1)

Volume	Invert	Avail.Storage	Storage Description
#1	309.10'	196 cf	**Custom Stage Data (Prismatic)**Listed below (Recalc) 490 cf Overall x 40.0% Voids
#2	309.10'	84 cf	**Custom Stage Data (Prismatic)**Listed below (Recalc) 210 cf Overall x 40.0% Voids
		280 cf	Total Available Storage

Elevation (feet)	Surf.Area (sq-ft)	Inc.Store (cubic-feet)	Cum.Store (cubic-feet)
309.10	245	0	0
311.10	245	490	490

Elevation (feet)	Surf.Area (sq-ft)	Inc.Store (cubic-feet)	Cum.Store (cubic-feet)
309.10	105	0	0
311.10	105	210	210

Device	Routing	Invert	Outlet Devices
#1	Discarded	309.10'	**10.000 in/hr Exfiltration over Surface area**
#2	Primary	309.35'	**6.0" Round Culvert** L= 43.0' Ke= 0.500 Inlet / Outlet Invert= 309.35' / 306.00' S= 0.0779 '/' Cc= 0.900 n= 0.013 Corrugated PE, smooth interior, Flow Area= 0.20 sf

Discarded OutFlow Max=0.08 cfs @ 11.65 hrs HW=309.15' (Free Discharge)
└**1=Exfiltration** (Exfiltration Controls 0.08 cfs)

Primary OutFlow Max=0.55 cfs @ 11.99 hrs HW=309.94' (Free Discharge)
└**2=Culvert** (Inlet Controls 0.55 cfs @ 2.80 fps)

Summary for Pond SMP1: StormTech

Inflow Area = 14,335 sf, 83.89% Impervious, Inflow Depth > 5.08" for 100 Year event
Inflow = 2.39 cfs @ 11.96 hrs, Volume= 6,067 cf
Outflow = 0.18 cfs @ 12.53 hrs, Volume= 6,065 cf, Atten= 92%, Lag= 33.9 min
Discarded = 0.18 cfs @ 12.53 hrs, Volume= 6,065 cf

Routing by Stor-Ind method, Time Span= 0.00-24.00 hrs, dt= 0.05 hrs
Peak Elev= 307.10' @ 12.53 hrs Surf.Area= 1,307 sf Storage= 2,253 cf

Plug-Flow detention time= 86.2 min calculated for 6,065 cf (100% of inflow)
Center-of-Mass det. time= 86.0 min (829.3 - 743.3)

Volume	Invert	Avail.Storage	Storage Description
#1A	304.00'	1,165 cf	**20.50'W x 52.28'L x 3.50'H Field A Z=0.5** 4,211 cf Overall - 1,298 cf Embedded = 2,913 cf x 40.0% Voids
#2A	304.50'	1,298 cf	**StormTech SC-740** x 28 Inside #1 Effective Size= 44.6"W x 30.0"H => 6.45 sf x 7.12'L = 45.9 cf Overall Size= 51.0"W x 30.0"H x 7.56'L with 0.44' Overlap Row Length Adjustment= +0.44' x 6.45 sf x 4 rows
		2,463 cf	Total Available Storage

Storage Group A created with Chamber Wizard

Device	Routing	Invert	Outlet Devices
#1	Discarded	304.00'	**6.000 in/hr Exfiltration over Surface area**

Discarded OutFlow Max=0.18 cfs @ 12.53 hrs HW=307.10' (Free Discharge)
└**1=Exfiltration** (Exfiltration Controls 0.18 cfs)

Summary for Pond SMP2: Infiltration Basin

Inflow Area = 15,151 sf, 30.90% Impervious, Inflow Depth > 1.20" for 100 Year event
Inflow = 0.83 cfs @ 12.00 hrs, Volume= 1,516 cf
Outflow = 0.14 cfs @ 12.21 hrs, Volume= 1,435 cf, Atten= 83%, Lag= 12.6 min
Discarded = 0.14 cfs @ 12.21 hrs, Volume= 1,435 cf
Primary = 0.00 cfs @ 0.00 hrs, Volume= 0 cf

Routing by Stor-Ind method, Time Span= 0.00-24.00 hrs, dt= 0.05 hrs / 3
Peak Elev= 305.97' @ 12.21 hrs Surf.Area= 623 sf Storage= 662 cf

Plug-Flow detention time= 71.1 min calculated for 1,435 cf (95% of inflow)
Center-of-Mass det. time= 40.0 min (832.5 - 792.5)

Volume	Invert	Avail.Storage	Storage Description
#1	299.50'	31 cf	**6.00'D x 4.50'H Vertical Cone/Cylinder** 127 cf Overall - 50 cf Embedded = 77 cf x 40.0% Voids
#2	300.00'	50 cf	**4.00'D x 4.00'H Vertical Cone/Cylinder** Inside #1
#3	304.00'	958 cf	**Custom Stage Data (Irregular)** Listed below (Recalc)
		1,039 cf	Total Available Storage

Elevation (feet)	Surf.Area (sq-ft)	Perim. (feet)	Inc.Store (cubic-feet)	Cum.Store (cubic-feet)	Wet.Area (sq-ft)
304.00	65	45.0	0	0	65
305.00	285	95.0	162	162	626
306.00	605	115.0	435	597	977
306.50	845	130.0	361	958	1,276

Device	Routing	Invert	Outlet Devices
#1	Discarded	299.50'	**10.000 in/hr Exfiltration over Horizontal area**
#2	Primary	306.00'	**30.0' long x 5.0' breadth Broad-Crested Rectangular Weir** Head (feet) 0.20 0.40 0.60 0.80 1.00 1.20 1.40 1.60 1.80 2.00 2.50 3.00 3.50 4.00 4.50 5.00 5.50 Coef. (English) 2.34 2.50 2.70 2.68 2.68 2.66 2.65 2.65 2.65 2.65 2.67 2.66 2.68 2.70 2.74 2.79 2.88

Discarded OutFlow Max=0.14 cfs @ 12.21 hrs HW=305.97' (Free Discharge)
└**1=Exfiltration** (Exfiltration Controls 0.14 cfs)

Primary OutFlow Max=0.00 cfs @ 0.00 hrs HW=299.50' (Free Discharge)
└**2=Broad-Crested Rectangular Weir** (Controls 0.00 cfs)

Summary for Link AP-1: AP-1

Inflow Area = 2,357 sf, 40.48% Impervious, Inflow Depth > 2.71" for 100 Year event
Inflow = 0.20 cfs @ 11.97 hrs, Volume= 533 cf
Primary = 0.20 cfs @ 11.97 hrs, Volume= 533 cf, Atten= 0%, Lag= 0.0 min

Primary outflow = Inflow, Time Span= 0.00-24.00 hrs, dt= 0.05 hrs

Summary for Link AP-2: AP-2

Inflow Area = 15,151 sf, 30.90% Impervious, Inflow Depth = 0.00" for 100 Year event
Inflow = 0.00 cfs @ 0.00 hrs, Volume= 0 cf
Primary = 0.00 cfs @ 0.00 hrs, Volume= 0 cf, Atten= 0%, Lag= 0.0 min

Primary outflow = Inflow, Time Span= 0.00-24.00 hrs, dt= 0.05 hrs

HYDROCAD CALCULATIONS
POST DEVELOPMENT

FROZEN CONDITIONS

Summary for Pond 1P: Frozen Infiltration Basin

Inflow Area = 15,151 sf, 30.90% Impervious, Inflow Depth > 2.16" for 100 Year event
Inflow = 0.91 cfs @ 12.01 hrs, Volume= 2,721 cf
Outflow = 0.89 cfs @ 12.01 hrs, Volume= 2,030 cf, Atten= 2%, Lag= 0.4 min
Discarded = 0.00 cfs @ 0.00 hrs, Volume= 0 cf
Primary = 0.89 cfs @ 12.01 hrs, Volume= 2,030 cf

Routing by Stor-Ind method, Time Span= 0.00-24.00 hrs, dt= 0.05 hrs / 3
Peak Elev= 306.05' @ 12.01 hrs Surf.Area= 654 sf Storage= 708 cf

Plug-Flow detention time= 173.5 min calculated for 2,026 cf (74% of inflow)
Center-of-Mass det. time= 72.7 min (858.3 - 785.6)

Volume	Invert	Avail.Storage	Storage Description
#1	299.50'	31 cf	**6.00'D x 4.50'H Vertical Cone/Cylinder** 127 cf Overall - 50 cf Embedded = 77 cf x 40.0% Voids
#2	300.00'	50 cf	**4.00'D x 4.00'H Vertical Cone/Cylinder** Inside #1
#3	304.00'	958 cf	**Custom Stage Data (Irregular)** Listed below (Recalc)
		1,039 cf	Total Available Storage

Elevation (feet)	Surf.Area (sq-ft)	Perim. (feet)	Inc.Store (cubic-feet)	Cum.Store (cubic-feet)	Wet.Area (sq-ft)
304.00	65	45.0	0	0	65
305.00	285	95.0	162	162	626
306.00	605	115.0	435	597	977
306.50	845	130.0	361	958	1,276

Device	Routing	Invert	Outlet Devices
#1	Primary	306.00'	**30.0' long x 5.0' breadth Broad-Crested Rectangular Weir** Head (feet) 0.20 0.40 0.60 0.80 1.00 1.20 1.40 1.60 1.80 2.00 2.50 3.00 3.50 4.00 4.50 5.00 5.50 Coef. (English) 2.34 2.50 2.70 2.68 2.68 2.66 2.65 2.65 2.65 2.65 2.67 2.66 2.68 2.70 2.74 2.79 2.88
#2	Discarded	299.50'	**10.000 in/hr Exfiltration over Surface area from 299.50' - 300.00'** Excluded Surface area = 28 sf

Discarded OutFlow Max=0.00 cfs @ 0.00 hrs HW=299.50' (Free Discharge)
↑—**2=Exfiltration** (Controls 0.00 cfs)

Primary OutFlow Max=0.71 cfs @ 12.01 hrs HW=306.05' (Free Discharge)
↑—**1=Broad-Crested Rectangular Weir** (Weir Controls 0.71 cfs @ 0.51 fps)

Summary for Pond 2P: Frozen Gravel Drip Strip

Inflow Area = 4,076 sf, 84.94% Impervious, Inflow Depth > 5.14" for 100 Year event
Inflow = 0.69 cfs @ 11.96 hrs, Volume= 1,744 cf
Outflow = 0.63 cfs @ 12.00 hrs, Volume= 1,703 cf, Atten= 9%, Lag= 2.1 min
Primary = 0.63 cfs @ 12.00 hrs, Volume= 1,703 cf

Routing by Stor-Ind method, Time Span= 0.00-24.00 hrs, dt= 0.05 hrs

Peak Elev= 310.04' @ 12.00 hrs Surf.Area= 350 sf Storage= 132 cf

Plug-Flow detention time= 32.0 min calculated for 1,703 cf (98% of inflow)
Center-of-Mass det. time= 16.8 min (759.9 - 743.1)

Volume	Invert	Avail.Storage	Storage Description
#1	309.10'	196 cf	**Custom Stage Data (Prismatic)**Listed below (Recalc) 490 cf Overall x 40.0% Voids
#2	309.10'	84 cf	**Custom Stage Data (Prismatic)**Listed below (Recalc) 210 cf Overall x 40.0% Voids
		280 cf	Total Available Storage

Elevation (feet)	Surf.Area (sq-ft)	Inc.Store (cubic-feet)	Cum.Store (cubic-feet)
309.10	245	0	0
311.10	245	490	490

Elevation (feet)	Surf.Area (sq-ft)	Inc.Store (cubic-feet)	Cum.Store (cubic-feet)
309.10	105	0	0
311.10	105	210	210

Device	Routing	Invert	Outlet Devices
#1	Primary	309.35'	**6.0" Round Culvert** L= 43.0' Ke= 0.500 Inlet / Outlet Invert= 309.35' / 306.00' S= 0.0779 '/' Cc= 0.900 n= 0.013 Corrugated PE, smooth interior, Flow Area= 0.20 sf

Primary OutFlow Max=0.62 cfs @ 12.00 hrs HW=310.04' (Free Discharge)
1=Culvert (Inlet Controls 0.62 cfs @ 3.18 fps)

Stormwater Practice Sizing

Job Name and # 246 West Avenue Apartments

Water Quality Volume Calculation
6/23/2016
WQv = [(P)(Rv)(A)]/12

Where:
Rv = 0.05 + 0.009(I)
I = impervious cover in percent
P = 90% rainfall (see Figure 4.1 in NYS Stormwater Management Design Manual)
A = Area in acres

SMP-1: Underground Infiltration Chambers

% Impervious	83.89%		
Rv	0.81		
90% Rainfall	1.15		
Area in Square Feet	14335		
WQv Required =	**1106**	ft^3	**0.025** ac-ft

SMP-2: Infiltration Basin/Trench

% Impervious	30.90%		
Rv	0.33		
90% Rainfall	1.15		
Area in Square Feet	15151		
WQv Required =	**476**	ft^3	**0.011** ac-ft

Job Name and # 246 West Avenue Apartments

Minimum Runoff Reduction Volume

6/23/2016

RRv = [(P)(Rv*)(Ai)]/12

Where:

Ai = (S)(Aic)

Rv = 0.05 + 0.009(I) where I is 100% impervious

Ai = impervious cover targeted for runoff reduction

Aic = Total area of new impervious cover

P = 90% rainfall (see Figure 4.1 in NYS Stormwater Management Design Manual)

S = Hydrologic Soil Group (HSG) Specific Reduction Factor (S)

A=0.55, B=0.40, C=0.30, D=0.20

S (HSG A)	0.55	
Aic	0.34	acres
Rv	0.95	
90% Rainfall	1.15	
Ai	0.187	

RRv = **0.017** acre feet = 742 ft^3

Appendix B

Soil Survey and Map Set

United States Department of Agriculture

NRCS

Natural Resources Conservation Service

A product of the National Cooperative Soil Survey, a joint effort of the United States Department of Agriculture and other Federal agencies, State agencies including the Agricultural Experiment Stations, and local participants

Custom Soil Resource Report for Saratoga County, New York

June 17, 2016

Preface

Soil surveys contain information that affects land use planning in survey areas. They highlight soil limitations that affect various land uses and provide information about the properties of the soils in the survey areas. Soil surveys are designed for many different users, including farmers, ranchers, foresters, agronomists, urban planners, community officials, engineers, developers, builders, and home buyers. Also, conservationists, teachers, students, and specialists in recreation, waste disposal, and pollution control can use the surveys to help them understand, protect, or enhance the environment.

Various land use regulations of Federal, State, and local governments may impose special restrictions on land use or land treatment. Soil surveys identify soil properties that are used in making various land use or land treatment decisions. The information is intended to help the land users identify and reduce the effects of soil limitations on various land uses. The landowner or user is responsible for identifying and complying with existing laws and regulations.

Although soil survey information can be used for general farm, local, and wider area planning, onsite investigation is needed to supplement this information in some cases. Examples include soil quality assessments (http://www.nrcs.usda.gov/wps/portal/nrcs/main/soils/health/) and certain conservation and engineering applications. For more detailed information, contact your local USDA Service Center (http://offices.sc.egov.usda.gov/locator/app?agency=nrcs) or your NRCS State Soil Scientist (http://www.nrcs.usda.gov/wps/portal/nrcs/detail/soils/contactus/?cid=nrcs142p2_053951).

Great differences in soil properties can occur within short distances. Some soils are seasonally wet or subject to flooding. Some are too unstable to be used as a foundation for buildings or roads. Clayey or wet soils are poorly suited to use as septic tank absorption fields. A high water table makes a soil poorly suited to basements or underground installations.

The National Cooperative Soil Survey is a joint effort of the United States Department of Agriculture and other Federal agencies, State agencies including the Agricultural Experiment Stations, and local agencies. The Natural Resources Conservation Service (NRCS) has leadership for the Federal part of the National Cooperative Soil Survey.

Information about soils is updated periodically. Updated information is available through the NRCS Web Soil Survey, the site for official soil survey information.

The U.S. Department of Agriculture (USDA) prohibits discrimination in all its programs and activities on the basis of race, color, national origin, age, disability, and where applicable, sex, marital status, familial status, parental status, religion, sexual orientation, genetic information, political beliefs, reprisal, or because all or a part of an individual's income is derived from any public assistance program. (Not all prohibited bases apply to all programs.) Persons with disabilities who require alternative means

for communication of program information (Braille, large print, audiotape, etc.) should contact USDA's TARGET Center at (202) 720-2600 (voice and TDD). To file a complaint of discrimination, write to USDA, Director, Office of Civil Rights, 1400 Independence Avenue, S.W., Washington, D.C. 20250-9410 or call (800) 795-3272 (voice) or (202) 720-6382 (TDD). USDA is an equal opportunity provider and employer.

Contents

Preface.....2
Soil Map.....5
Soil Map.....6
Legend.....7
Map Unit Legend.....8
Map Unit Descriptions.....8
Saratoga County, New York.....10
DeA—Deerfield loamy fine sand, nearly level.....10
WnB—Windsor loamy sand, 3 to 8 percent slopes.....11

Soil Map

The soil map section includes the soil map for the defined area of interest, a list of soil map units on the map and extent of each map unit, and cartographic symbols displayed on the map. Also presented are various metadata about data used to produce the map, and a description of each soil map unit.

Custom Soil Resource Report
Soil Map

Map Scale: 1:1,000 if printed on A landscape (11" x 8.5") sheet.

N

Meters
0 10 20 40 60

Feet
0 45 90 180 270

Map projection: Web Mercator Corner coordinates: WGS84 Edge tics: UTM Zone 18N WGS84

MAP LEGEND

Area of Interest (AOI)
- Area of Interest (AOI)

Soils
- Soil Map Unit Polygons
- Soil Map Unit Lines
- Soil Map Unit Points

Special Point Features
- Blowout
- Borrow Pit
- Clay Spot
- Closed Depression
- Gravel Pit
- Gravelly Spot
- Landfill
- Lava Flow
- Marsh or swamp
- Mine or Quarry
- Miscellaneous Water
- Perennial Water
- Rock Outcrop
- Saline Spot
- Sandy Spot
- Severely Eroded Spot
- Sinkhole
- Slide or Slip
- Sodic Spot
- Spoil Area
- Stony Spot
- Very Stony Spot
- Wet Spot
- Other
- Special Line Features

Water Features
- Streams and Canals

Transportation
- Rails
- Interstate Highways
- US Routes
- Major Roads
- Local Roads

Background
- Aerial Photography

MAP INFORMATION

The soil surveys that comprise your AOI were mapped at 1:24,000.

Warning: Soil Map may not be valid at this scale.

Enlargement of maps beyond the scale of mapping can cause misunderstanding of the detail of mapping and accuracy of soil line placement. The maps do not show the small areas of contrasting soils that could have been shown at a more detailed scale.

Please rely on the bar scale on each map sheet for map measurements.

Source of Map: Natural Resources Conservation Service
Web Soil Survey URL: http://websoilsurvey.nrcs.usda.gov
Coordinate System: Web Mercator (EPSG:3857)

Maps from the Web Soil Survey are based on the Web Mercator projection, which preserves direction and shape but distorts distance and area. A projection that preserves area, such as the Albers equal-area conic projection, should be used if more accurate calculations of distance or area are required.

This product is generated from the USDA-NRCS certified data as of the version date(s) listed below.

Soil Survey Area: Saratoga County, New York
Survey Area Data: Version 15, Sep 24, 2015

Soil map units are labeled (as space allows) for map scales 1:50,000 or larger.

Date(s) aerial images were photographed: Jun 19, 2010—Oct 11, 2010

The orthophoto or other base map on which the soil lines were compiled and digitized probably differs from the background imagery displayed on these maps. As a result, some minor shifting of map unit boundaries may be evident.

Map Unit Legend

Saratoga County, New York (NY091)			
Map Unit Symbol	**Map Unit Name**	**Acres in AOI**	**Percent of AOI**
DeA	Deerfield loamy fine sand, nearly level	1.1	30.1%
WnB	Windsor loamy sand, 3 to 8 percent slopes	2.4	69.9%
Totals for Area of Interest		**3.5**	**100.0%**

Map Unit Descriptions

The map units delineated on the detailed soil maps in a soil survey represent the soils or miscellaneous areas in the survey area. The map unit descriptions, along with the maps, can be used to determine the composition and properties of a unit.

A map unit delineation on a soil map represents an area dominated by one or more major kinds of soil or miscellaneous areas. A map unit is identified and named according to the taxonomic classification of the dominant soils. Within a taxonomic class there are precisely defined limits for the properties of the soils. On the landscape, however, the soils are natural phenomena, and they have the characteristic variability of all natural phenomena. Thus, the range of some observed properties may extend beyond the limits defined for a taxonomic class. Areas of soils of a single taxonomic class rarely, if ever, can be mapped without including areas of other taxonomic classes. Consequently, every map unit is made up of the soils or miscellaneous areas for which it is named and some minor components that belong to taxonomic classes other than those of the major soils.

Most minor soils have properties similar to those of the dominant soil or soils in the map unit, and thus they do not affect use and management. These are called noncontrasting, or similar, components. They may or may not be mentioned in a particular map unit description. Other minor components, however, have properties and behavioral characteristics divergent enough to affect use or to require different management. These are called contrasting, or dissimilar, components. They generally are in small areas and could not be mapped separately because of the scale used. Some small areas of strongly contrasting soils or miscellaneous areas are identified by a special symbol on the maps. If included in the database for a given area, the contrasting minor components are identified in the map unit descriptions along with some characteristics of each. A few areas of minor components may not have been observed, and consequently they are not mentioned in the descriptions, especially where the pattern was so complex that it was impractical to make enough observations to identify all the soils and miscellaneous areas on the landscape.

The presence of minor components in a map unit in no way diminishes the usefulness or accuracy of the data. The objective of mapping is not to delineate pure taxonomic classes but rather to separate the landscape into landforms or landform segments that have similar use and management requirements. The delineation of such segments on the map provides sufficient information for the development of resource plans. If

intensive use of small areas is planned, however, onsite investigation is needed to define and locate the soils and miscellaneous areas.

An identifying symbol precedes the map unit name in the map unit descriptions. Each description includes general facts about the unit and gives important soil properties and qualities.

Soils that have profiles that are almost alike make up a *soil series*. Except for differences in texture of the surface layer, all the soils of a series have major horizons that are similar in composition, thickness, and arrangement.

Soils of one series can differ in texture of the surface layer, slope, stoniness, salinity, degree of erosion, and other characteristics that affect their use. On the basis of such differences, a soil series is divided into *soil phases*. Most of the areas shown on the detailed soil maps are phases of soil series. The name of a soil phase commonly indicates a feature that affects use or management. For example, Alpha silt loam, 0 to 2 percent slopes, is a phase of the Alpha series.

Some map units are made up of two or more major soils or miscellaneous areas. These map units are complexes, associations, or undifferentiated groups.

A *complex* consists of two or more soils or miscellaneous areas in such an intricate pattern or in such small areas that they cannot be shown separately on the maps. The pattern and proportion of the soils or miscellaneous areas are somewhat similar in all areas. Alpha-Beta complex, 0 to 6 percent slopes, is an example.

An *association* is made up of two or more geographically associated soils or miscellaneous areas that are shown as one unit on the maps. Because of present or anticipated uses of the map units in the survey area, it was not considered practical or necessary to map the soils or miscellaneous areas separately. The pattern and relative proportion of the soils or miscellaneous areas are somewhat similar. Alpha-Beta association, 0 to 2 percent slopes, is an example.

An *undifferentiated group* is made up of two or more soils or miscellaneous areas that could be mapped individually but are mapped as one unit because similar interpretations can be made for use and management. The pattern and proportion of the soils or miscellaneous areas in a mapped area are not uniform. An area can be made up of only one of the major soils or miscellaneous areas, or it can be made up of all of them. Alpha and Beta soils, 0 to 2 percent slopes, is an example.

Some surveys include *miscellaneous areas*. Such areas have little or no soil material and support little or no vegetation. Rock outcrop is an example.

Saratoga County, New York

DeA—Deerfield loamy fine sand, nearly level

Map Unit Setting

National map unit symbol: 9w9t
Elevation: 0 to 1,000 feet
Mean annual precipitation: 36 to 48 inches
Mean annual air temperature: 45 to 48 degrees F
Frost-free period: 125 to 160 days
Farmland classification: Farmland of statewide importance

Map Unit Composition

Deerfield and similar soils: 75 percent
Minor components: 25 percent
Estimates are based on observations, descriptions, and transects of the mapunit.

Description of Deerfield

Setting

Landform: Deltas, outwash plains, terraces
Landform position (two-dimensional): Summit
Landform position (three-dimensional): Tread
Down-slope shape: Concave
Across-slope shape: Convex
Parent material: Sandy glaciofluvial or deltaic deposits derived mainly from granite, gneiss, or sandstone

Typical profile

H1 - 0 to 10 inches: loamy fine sand
H2 - 10 to 26 inches: loamy fine sand
H3 - 26 to 72 inches: fine sand

Properties and qualities

Slope: 0 to 3 percent
Depth to restrictive feature: More than 80 inches
Natural drainage class: Moderately well drained
Capacity of the most limiting layer to transmit water (Ksat): High to very high (1.98 to 19.98 in/hr)
Depth to water table: About 18 to 36 inches
Frequency of flooding: None
Frequency of ponding: None
Available water storage in profile: Low (about 3.8 inches)

Interpretive groups

Land capability classification (irrigated): None specified
Land capability classification (nonirrigated): 3w
Hydrologic Soil Group: A

Minor Components

Oakville

Percent of map unit: 10 percent

Claverack

Percent of map unit: 7 percent

Wareham
Percent of map unit: 4 percent

Wareham
Percent of map unit: 4 percent

WnB—Windsor loamy sand, 3 to 8 percent slopes

Map Unit Setting

National map unit symbol: 2svkf
Elevation: 0 to 1,210 feet
Mean annual precipitation: 36 to 71 inches
Mean annual air temperature: 39 to 55 degrees F
Frost-free period: 140 to 240 days
Farmland classification: Farmland of statewide importance

Map Unit Composition

Windsor, loamy sand, and similar soils: 85 percent
Minor components: 15 percent
Estimates are based on observations, descriptions, and transects of the mapunit.

Description of Windsor, Loamy Sand

Setting

Landform: Deltas, dunes, outwash plains, outwash terraces
Landform position (three-dimensional): Riser, tread
Down-slope shape: Linear, convex
Across-slope shape: Linear, convex
Parent material: Loose sandy glaciofluvial deposits derived from granite and/or loose sandy glaciofluvial deposits derived from schist and/or loose sandy glaciofluvial deposits derived from gneiss

Typical profile

O - 0 to 1 inches: moderately decomposed plant material
A - 1 to 3 inches: loamy sand
Bw - 3 to 25 inches: loamy sand
C - 25 to 65 inches: sand

Properties and qualities

Slope: 3 to 8 percent
Depth to restrictive feature: More than 80 inches
Natural drainage class: Excessively drained
Runoff class: Low
Capacity of the most limiting layer to transmit water (Ksat): Moderately high to very high (1.42 to 99.90 in/hr)
Depth to water table: More than 80 inches
Frequency of flooding: None
Frequency of ponding: None
Salinity, maximum in profile: Nonsaline to very slightly saline (0.0 to 2.0 mmhos/cm)
Available water storage in profile: Low (about 4.5 inches)

Interpretive groups

Land capability classification (irrigated): None specified
Land capability classification (nonirrigated): 2s
Hydrologic Soil Group: A

Minor Components

Hinckley, loamy sand

Percent of map unit: 10 percent
Landform: Deltas, eskers, kames, outwash plains
Landform position (two-dimensional): Summit, shoulder, backslope
Landform position (three-dimensional): Head slope, nose slope, side slope, crest, rise
Down-slope shape: Convex
Across-slope shape: Convex, linear

Deerfield, loamy sand

Percent of map unit: 5 percent
Landform: Deltas, outwash plains, terraces
Landform position (two-dimensional): Footslope
Landform position (three-dimensional): Tread, talf
Down-slope shape: Linear
Across-slope shape: Linear

Appendix C

SWPPP Inspection Form

246 West Ave. Apartments
WEEKLY SWPPP INSPECTION REPORT

Inspector Name:	Date:
Signature (required):	Time:
Weather:	Inspection #:
Soil Conditions (dry, saturated, etc):	

Note: Digital photos, with date stamp required for all practices requiring corrective action, before and after, to be attached to the inspection report.

	YES	NO	N/A		
1.	☐	☐	☐	Routine Inspection.	Date of last inspection:_____
2.	☐	☐	☐	Inspection following rain event.	Date/time of storm ending:_____ Rainfall amount:_____ Recorded by:_____
3.	☐	☐	☐	Is this a final site inspection?	
4.	☐	☐	☐	Has site undergone final stabilization?	
	☐	☐	☐	If so, have all temporary erosion and sediment controls been removed?	

Site Disturbance (Indicate Locations on Plan)

	YES	NO	N/A	
1.	☐	☐	☐	Areas previously disturbed, but have not undergone active site work in the last 14 days?
2.	☐	☐	☐	Areas disturbed within last 14 days?
3.	☐	☐	☐	Areas expected to be disturbed in next 14 days?
4.	☐	☐	☐	Do areas of steep slopes or complex stabilization issues exist? If "YES" explain:
5.	☐	☐	☐	Are there currently more than 5 acres of disturbed soil at the site? If so make sure there is an approval letter from NYS DEC.

Additional Comments:_____

Inspection of Erosion and Sediment Control Devices

	Type of Control Device	Accumulation (if any) in %	Repairs/Maintenance Needed
1.			
2.			
3.			
4.			
5.			
6.			

Stabilization/Runoff

	YES	NO	N/A	
1.	☐	☐	☐	Are all existing disturbed areas contained by control devices? Type of devices:
2.	☐	☐	☐	Are there areas that require stabilization within the next 14 days? Specify Area:
3.	☐	☐	☐	Have stabilization measures been initiated in inactive areas?
4.	☐	☐	☐	Is there current snow cover or frozen ground conditions?
5.	☐	☐	☐	Rills or gullies?
6.	☐	☐	☐	Slumping/deposition?
7.	☐	☐	☐	Loss of vegetation?
8.	☐	☐	☐	Lack of germination?
9.	☐	☐	☐	Loss of mulching?

Receiving Structures/Water Bodies (Indicate locations where runoff leaves the project site on the site plan)

	YES	NO	N/A	
1.	☐	☐	☐	Surface water swale or natural surface waterbody?

If natural waterbody:

Is waterbody located ☐ onsite, or ☐ adjacent to property boundary?

Description of condition:_____

2.	☐	☐	☐	Municipal or community system?

Inspect locations where runoff from project site enters the receiving waters and indicate if there is evidence of:

a.	☐	☐	☐	Rills or gullies?
b.	☐	☐	☐	Slumping/deposition?
c.	☐	☐	☐	Loss of vegetation?
d.	☐	☐	☐	Undermining of structures?
e.	☐	☐	☐	Was there a discharge into the receiving water on the day of inspection?
f.	☐	☐	☐	Is there evidence of turbidity, sedimentation, or oil in the receiving waters?

Additional Comments:_____

Inspection of Post-Construction Stormwater Management Control Devices

	Type of Control Device	Phase of Construction	Repairs/Maintenance Needed
1.			
2.			
3.			
4.			

General Site Condition

	YES	NO	N/A	
1.	☐	☐	☐	Have action items from previous reports been addressed?
2.	☐	☐	☐	Does routine maintenance of protection components occur on a regular basis?
3.	☐	☐	☐	Does cleaning and/or sweeping affected roadways occur, at minimum, daily?
4.	☐	☐	☐	Is debris and litter removed on a monthly basis, or as necessary?
5.	☐	☐	☐	Is the site maintained in an orderly manner?

Describe the condition of all natural waterbodies within or adjacent to the project that receive runoff from the site:

Contractors progress over last 7 days:_____

Anticipated work to be begun in the next 7 days:_____

Additional Comments:_____

Visual Observations

	YES	NO	N/A	
1.	☐	☐	☐	All erosion and sediment control measures have been installed/constructed?
2.	☐	☐	☐	All erosion and sediment control measures are being maintained properly?

SUMMARY OF ACTION ITEMS TO REPAIR/REPLACE/MAINTAIN/CORRECT DEFICIENCIES

Action Reported To (no signature required): _____

Company: _____

Appendix D

Other SWPPP Forms

Construction Sequence
SWPPP Plan Changes
Spill Response Form
Stormwater Management Practice Maintenance Log

The operator shall prepare a summary of construction status using the Construction Sequence Form below once every month. Significant deviations to the sequence and reasons for those deviations (i.e. weather, subcontractor availability, etc.), shall be noted by the contractor. The schedule shall be used to record the dates for initiation of construction, implementation of erosion control measures, stabilization, etc. A copy of this table will be maintained at the construction site and updated in addition to the individual Inspection Reports completed for each inspection.

Construction Sequence Form

Construction Activities (Identify name of planned practices)	Date Complete
1.	
2.	
3.	
4.	
5.	
6.	
7.	
8.	
9.	
10.	
11.	
12.	

STORM WATER POLLUTION PREVENTION PLAN
PLAN CHANGES, AUTHORIZATION, AND CHANGE CERTIFICATION

CHANGES REQUIRED TO THE POLLUTION PREVENTION PLAN:

_____
_____
_____
_____
_____

REASONS FOR CHANGES:

_____
_____
_____
_____
_____

REQUESTED BY: _____

DATE: _____

AUTHORIZED BY: _____

DATE: _____

CERTIFICATION OF CHANGES:

I certify under penalty of law that this document and all attachments were prepared under my direction or supervision in accordance with a system designed to assure that qualified personnel properly gathered and evaluated the information submitted. Based on my inquiry of the person or persons who manage the system, or those persons directly responsible for gathering the information, the information submitted is, to the best of my knowledge and belief, true, accurate, and complete. I am aware that false statements made herein are punishable as a Class A misdemeanor pursuant to Section 210.45 of the penal code.

SIGNATURE: _____

DATE: _____

SPILL RESPONSE REPORT

Within 1 hour of a spill discovery less than 2 gallons in volume the following must be notified:

John Luke Hodorowski, John-Paul Builders, LLC
(518)356-1435

Within 1 hour of a spill discovery greater than 2 gallons the following must be notified:

John Luke Hodorowski
NYSDEC Spill Response Hotline 1-800-457-7362
Spill Response Contractor

Material Spilled: _____

_____

_____

_____

Approximate Volume: _____

Location: _____

_____

_____

Distance to nearest down gradient drainage: _____

_____

Distance to nearest down gradient open water: _____

_____

Temporary control measures in place: _____

_____

_____

_____

_____

_____

Cost Estimate for Letter of Credit				PB #
Project No:	**201178**			
Project:	**246 West Ave**			
Location:	**246 West Avenue**			
	Saratoga Springs, New York			
Date:	**6/23/2016**			
ON-SITE WORK				
Item	**Quantity**	**Unit**	**Unit Cost**	**Subtotal**
Site Preparation and Grading				
Erosion Control (including silt fence & construction acc	1	LS	$2,000.00	$2,000.00
Remove Bituminous Asphalt Pament	110	SY	$3.00	$330.00
Tree Removal and grubbing	1	LS	$2,000.00	$2,000.00
Rough Grading	1	LS	$1,500.00	$1,500.00
Pump station removal	1	LS	$500.00	$500.00
Hardscape				
Porous Pavement and base	5,360	SF	$4.50	$24,120.00
Concrete Walk	460	SF	$5.25	$2,415.00
Cast in Place Concrete Curb	206	LF	$18.00	$3,708.00
Site Amenities				
Parking lot light pole	2	EA	$2,200.00	$4,400.00
Traffic signs	1	LS	$3,500.00	$3,500.00
Striping	1	LS	$1,000.00	$1,000.00
Site Utilities				
Catch Basins/ Drain Inlets	3	EA	$1,200.00	$3,600.00
Clean Outs	3	EA	$1,200.00	$3,600.00
Storm Drywell	1	EA	$2,300.00	$2,300.00
Stormtech infiltrator basin	1	LS	$9,000.00	$9,000.00
6" HDPE Roof Leader	74	LF	$12.00	$888.00
8" HDPE Storm Line - perf	166	LF	$20.00	$3,320.00
12" HDPE Storm Line	100	LF	$20.00	$2,000.00
8" PVC Storm line	39	LF	$22.00	$858.00
6" PVC Sanitary Line	52	LF	$20.00	$1,040.00
2" DIP Waterline	45	LF	$12.00	$540.00
6" DIP Water Line	12	LF	$28.00	$336.00
Nyloplast yard drain	5	EA	$600.00	$3,000.00
Landscaping				
Deciduous Trees	1	EA	$700.00	$700.00
Evergreen Trees	30	EA	$350.00	$10,500.00
Shrubs	25	EA	$220.00	$5,500.00
On-Site Total				**$92,655.00**
On-Site Total X .25				**$23,163.75**
OFF-SITE WORK				
Concrete Sidewalk	800	SF	$5.25	$4,200.00
Cast in Place Concrete Curb	130	LF	$18.00	$2,340.00
Bike Rack	1	EA	$600.00	$600.00

Interprative signage	1	EA	$350.00	$350.00
Concrete Pavers	171	SF	$8.00	$1,368.00
6" PVC Sanitary line	43	LF	$20.00	$860.00
8" PVC Sanitary Line	56	LF	$22.00	$1,232.00
8" PVC Storm Line	37	LF	$22.00	$814.00
12"x6" Sleeve / valve	1	EA	$3,200.00	$3,200.00
12" Ductile Iron Pipe (Water)	585	LF	$100.00	$58,500.00
12" Gate Valve components	1	EA	$750.00	$750.00
12" DIP termination and cap on new waterline	1	EA	$200.00	$200.00
Fire Hydrant and Valve Assembly	2	EA	$4,500.00	$9,000.00
6" DIP Waterline	48	LF	$28.00	$1,344.00
Sanitary Manholes	1	EA	$3,500.00	$3,500.00
Decorative Street Lights	1	EA	$3,000.00	$3,000.00
Deciduous Trees	10	EA	$700.00	$7,000.00
Connection to SAN MH @ West Ave w/ drop	1	LS	$3,000.00	$3,000.00
Connection to existing 12" DIP line on West	1	EA	$500.00	$500.00
As Built Drawings	1	LS	$3,500.00	$3,500.00
Off-Site Total				**$105,258.00**
Total Site Work				**$197,913.00**
Letter of Credit Amounts				
Total off-site work				$105,258.00
Total on-site work x .25				$23,163.75
Total				**$128,421.75**
L.O.C. amount				**$128,500.00**

City of Saratoga Springs
OFFICE OF PUBLIC WORKS
5 Lake Avenue
Saratoga Springs, New York 12866

Phone 518-587-3550 ** Fax 518-587-2417
www.saratoga-springs.org

ANTHONY J. SCIROCCO
COMMISSIONER

TIMOTHY J. COGAN
DEPUTY COMMISSIONER

NEW WATER SERVICE CONNECTION AGREEMENT & APPLICATION FORM

Property Owner's Name: John-Paul Builders, LLC

Project Name (if applicable): 246 West Ave Apartments

Property Address: 246 West Ave

Tax Map#: 178.33-1-20 & 21

Size of Tap (check one below):
☐ ¾" ☐ 1" ☐ Greater than 1": _____

RESIDENTIAL
Minimum fee is $3,000 for the 1st dwelling and $2,000 for each additional dwelling

Number of Dwellings: 16

Appraised Value: _____
If $120,000 or less please provide copy of certified appraisal

NON-RESIDENTIAL
Minimum fee is $3,000 for the 1st unit of water and $2,000 for each additional unit of water. A unit of water is 14,000 cubic feet of water per year.

Estimated Cubic Feet of Water per Year: _____

Permit Fee: 33,000

To be paid in full without any contingencies or protest, on or before the Building Inspector approves the rough plumbing, including the installation of the water meter, or at the time of the issuance of a tapping permit.

The undersigned acknowledges the fees as estimated above and outlined in the City of Saratoga Springs Water Ordinance and Resolution, section 12, printed on the reverse side of this document.

The undersigned represents to the City that they have full and complete authority to execute this document and find and commit the developer to pay fee(s) as required by the City Water Ordinance. This agreement shall be binding on all of the undersigned transferees.

The undersigned acknowledges that a copy of this document will be delivered to all appropriate and necessary governmental entities, and the undersigned further acknowledges that it shall pay as provided herein.

Authorized Signature: _____ Company Name: John-Paul Builders, LLC
Company Address: 796 Burdeck Street, Schenectady, NY 12306
Phone Number: 518-356-1435 Date: 06-23-2016

Department of Public Works Approval: _____ Date: _____

Rev Account – WATCON

12. …

There shall also be a service connection fee with the following provisions:

A. Any new service connections (3/4 inch and 1 inch taps) to the City's water system shall be a minimum of $3,000.00 (three thousand dollars) per unit. Unless waived, the service connection fee must be paid in full on or before the Building Inspector approves the rough plumbing, including the installation of the water meter, or at the time of the issuance of a tapping permit.

B. Any new service connection for either:

1. Non-residential use (greater than a 1 inch tap) shall be estimated to use more than one (1) unit of water per year shall be charged a minimum service connection fee of three thousand dollars ($3,000) for the first unit of water and ***two thousand dollars ($2000)*** for each additional unit of water or part thereof; or
2. Residential use where more than one residential dwelling per parcel is served by a single service connection shall be charged a minimum service connection fee of three thousand dollars ($3,000) for the first dwelling and ***two thousand dollars ($2,000)*** for each additional dwelling unit.

C. A unit of water shall be defined as fourteen thousand (14,000) cubic feet of water per year.

D. Any project that improves the City's water distribution system at the sole cost of a developer, the cost of the improvement by the developer will be deducted from the cost of the service connection fee. If the cost of the improvement is greater than the cost of the service connection, then no service connection fee will be charged. To be considered for eligibility, the diameter of the watermain installed must be 12" or greater.

E. Exemptions to these new service connection fees will be all properties within Water's Edge at Saratoga Lake Planned Unit Development District not to exceed 304 units (amended June 6, 1998), Phase I and II of the Meadowbrook subdivision and existing homes in the Knoll Spring Park water district. Also, credit for 69 taps will be credited to Interlaken Phase "B" (Regatta View). The exemptions for these projects will be granted due to the fact that the cost to extend the infrastructure of the City to these projects was not borne by the City and are of greater cost than the service connection fee. Also exempt shall be all connections made to that portion of the Doten Avenue and East Broadway water line financed by federal funds because federal regulations prohibit the imposition of a service connection fee. Also exempt shall be the pre-existing homes defined in the Gilbert Road/Meadowbrook Road Special Assessment District.

F. Taps that are to be used solely for sprinkler system and fire protection will not be affected.

G. 1.) A Low Income House shall be defined as any new residential house and lot whose agreed to selling price is $120,000 or less or any existing residential house and lot whose appraised value is $120,000 or less. Proof of price or value has to be provided by documents from the lending institution or a certified appraiser.

2.) All dwellings meeting the above stated requirements shall be considered Low Income Housing and subject to a service connection fee of $500 (five hundred dollars) per house. All other conditions remain the same. Low Income Housing price will be determined on an annual basis by increasing rate of Consumer Price Index for this region.

3.) If a Low Income House is sold within five (5) years of the installation of a new service connection at a price that is greater than the definition of a Low Income House at that time, the seller will be responsible to pay the City the full cost of a service connection fee.

H. Anyone constructing a house on speculation will be charged the full service connection fee that is applicable at the time. When proof of price is submitted, a rebate will be issued if warranted, to be determined by the Commissioner of Public Works.

I. All monies raised by the new service connection fees are to be maintained in a dedicated fund for capital improvements under the control of the Commissioner of Public Works. The monies are not to be used for maintenance, or the reduction of water rates.

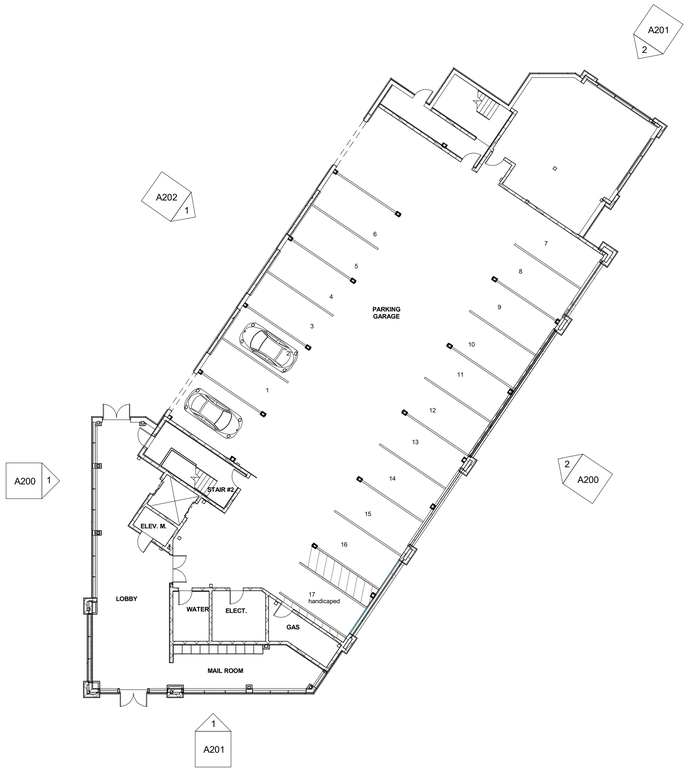

1 Level 1 (GROUND LEVEL PARKING)
1/16" = 1'-0"

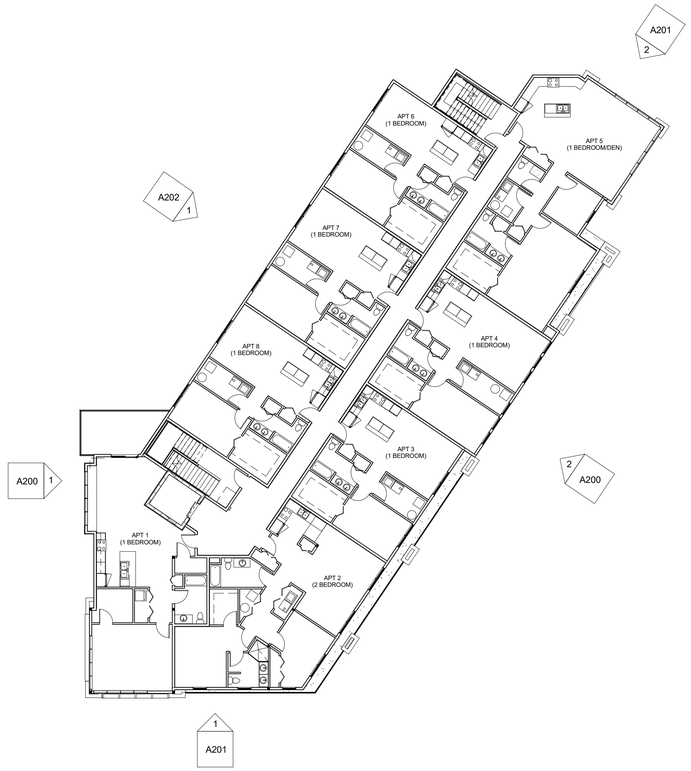

2 LEVEL 2
1/16" = 1'-0"

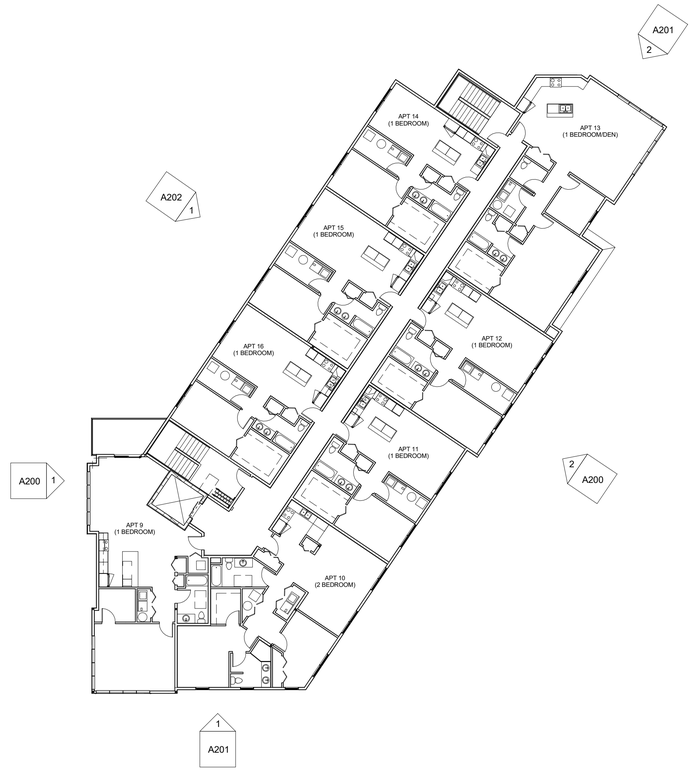

3 LEVEL 3
1/16" = 1'-0"

6/22/16

RE4ORM ARCHITECTURE
323 CLINTON STREET
SCHENECTADY, NY 12305
P:518.399.4174
F:518.399.4105
WWW.RE4ORMARCHITECTURE.COM

246 WEST AVE APARTMENTS

246 WEST AVE
SARATOGA SPRINGS, NY

FLOOR PLANS

A100

CONTRACTOR SHALL VERIFY ALL DIMENSION AT SITE. UNAUTHORIZED ALTERATIONS OR
ADDITIONS TO THIS DOCUMENT IS A VIOLATION OF THE NEW YORK STATE EDUCATION LAW.

1 NORTH ELEVATION
1/8" = 1'-0"

ELEVATION NOTES	
LABEL	ELEVATION NOTE
E01	"SMARTSIDE" ENGINEERED WOOD LAP SIDING FACTORY FINISHED COLOR TBD
E02	
E03	"SMARTSIDE" ENGINEERED WOOD TRIM FASCIA BOARDS & VENTED SOFFIT FACTORY FINISHED COLOR TBD
E04	"SMARTSIDE" ENGINEERED WOOD TRIM CORNER BOARDS FACTORY FINISHED COLOR TBD
E05	CULTURED STONE SILL
E06	CULTURED STONE VENEER TBD
E07	DECORATIVE HEAVY TIMBER BRACKETS, PAINTED COLOR TBD
E08	"SMARTSIDE" ENGINEERED WOOD SHAKE SIDING FACTORY FINISHED COLOR TBD
E09	COLUMNS WRAPED WITH "SMARTSIDE" ENGINEERED WOOD TRIM BORADS FACTORY FINISHED COLOR TBD
E10	FYPON OR EQUAL DECORATIVE ROUND LOUVER & TRIM
E11	DECORATIVE TRUSS & TRIM PAINTED COLOR TBD
E12	CULTURED STONE VENEER PIER WITH CONCRETE CAP
E13	STANDING SEAM METAL ROOF, COLOR TBD
E14	"MIRATEC" AND "EXTIRA" COMPOSITE BOARDS (PANEL & TRIMS) PAINTED, COLOR TBD
E15	"SMARTSIDE" ENGINEERED WOOD TRIM BOARDS FACTORY FINISHED COLOR TBD
E16	CUPOLA (CONTRACTORS OPTION TO BUILD IN PLACE OR INSTALL PREMENUACTURED UNIT)
E17	CABLE PIPE RAIL WITH PAINTED POSTS COLOR TBD
E18	ROOF CANOPY WITH ASPHALT SHINGLES AND "SMARTSIDE" FASCIA BOARDS & SOFFITS

2 SOUTH (BIKE PATH) ELEVATION
1/8" = 1'-0"

6/22/16

RE4ORM ARCHITECTURE
323 CLINTON STREET
SCHENECTADY, NY 12305
P:518.399.4174
F:518.399.4105
WWW.RE4ORMARCHITECTURE.COM

246 WEST AVE APARTMENTS

246 WEST AVE
SARATOGA SPRINGS, NY

EXTERIOR ELEVATIONS

A200

CONTRACTOR SHALL VERIFY ALL DIMENSION AT SITE. UNAUTHORIZED ALTERATIONS OR ADDITIONS TO THIS DOCUMENT IS A VIOLATION OF THE NEW YORK STATE EDUCATION LAW.

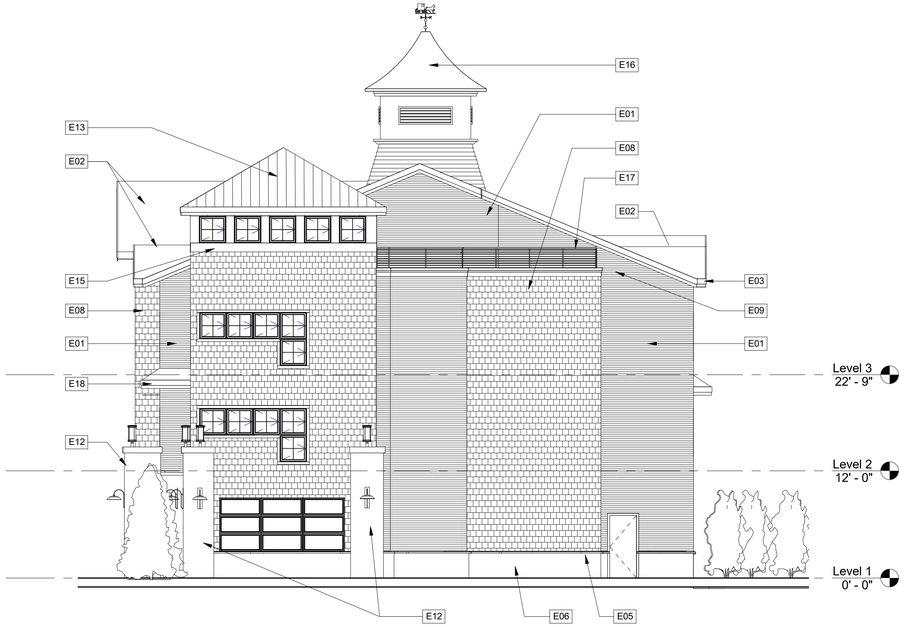

2 EAST ELEVATION
1/8" = 1'-0"

1 WEST ELEVATION
1/8" = 1'-0"

ELEVATION NOTES	
LABEL	ELEVATION NOTE
E01	"SMARTSIDE" ENGINEERED WOOD LAP SIDING FACTORY FINISHED COLOR TBD
E02	
E03	"SMARTSIDE" ENGINEERED WOOD TRIM FASCIA BOARDS & VENTED SOFFIT FACTORY FINISHED COLOR TBD
E04	"SMARTSIDE" ENGINEERED WOOD TRIM CORNER BOARDS FACTORY FINISHED COLOR TBD
E05	CULTURED STONE SILL
E06	CULTURED STONE VENEER TBD
E07	DECORATIVE HEAVY TIMBER BRACKETS, PAINTED COLOR TBD
E08	"SMARTSIDE" ENGINEERED WOOD SHAKE SIDING FACTORY FINISHED COLOR TBD
E09	COLUMNS WRAPED WITH "SMARTSIDE" ENGINEERED WOOD TRIM BORADS FACTORY FINISHED COLOR TBD
E10	FYPON OR EQUAL DECORATIVE ROUND LOUVER & TRIM
E11	DECORATIVE TRUSS & TRIM PAINTED COLOR TBD
E12	CULTURED STONE VENEER PIER WITH CONCRETE CAP
E13	STANDING SEAM METAL ROOF, COLOR TBD
E14	"MIRATEC" AND "EXTIRA" COMPOSITE BOARDS (PANEL & TRIMS) PAINTED, COLOR TBD
E15	"SMARTSIDE" ENGINEERED WOOD TRIM BOARDS FACTORY FINISHED COLOR TBD
E16	CUPOLA (CONTRACTORS OPTION TO BUILD IN PLACE OR INSTALL PREMENUACTURED UNIT)
E17	CABLE PIPE RAIL WITH PAINTED POSTS COLOR TBD
E18	ROOF CANOPY WITH ASPHALT SHINGLES AND "SMARTSIDE" FASCIA BOARDS & SOFFITS

6/22/16

RE4ORM ARCHITECTURE
323 CLINTON STREET
SCHENECTADY, NY 12305
P:518.399.4174
F:518.399.4105
WWW.RE4ORMARCHITECTURE.COM

246 WEST AVE APARTMENTS

246 WEST AVE
SARATOGA SPRINGS, NY

EXTERIOR ELEVATIONS

A201

CONTRACTOR SHALL VERIFY ALL DIMENSION AT SITE. UNAUTHORIZED ALTERATIONS OR ADDITIONS TO THIS DOCUMENT IS A VIOLATION OF THE NEW YORK STATE EDUCATION LAW.

ELEVATION NOTES	
LABEL	ELEVATION NOTE

E01	"SMARTSIDE" ENGINEERED WOOD LAP SIDING FACTORY FINISHED COLOR TBD
E02	
E03	"SMARTSIDE" ENGINEERED WOOD TRIM FASCIA BOARDS & VENTED SOFFIT FACTORY FINISHED COLOR TBD
E04	"SMARTSIDE" ENGINEERED WOOD TRIM CORNER BOARDS FACTORY FINISHED COLOR TBD
E05	CULTURED STONE SILL
E06	CULTURED STONE VENEER TBD
E07	DECORATIVE HEAVY TIMBER BRACKETS, PAINTED COLOR TBD
E08	"SMARTSIDE" ENGINEERED WOOD SHAKE SIDING FACTORY FINISHED COLOR TBD
E09	COLUMNS WRAPED WITH "SMARTSIDE" ENGINEERED WOOD TRIM BORADS FACTORY FINISHED COLOR TBD
E10	FYPON OR EQUAL DECORATIVE ROUND LOUVER & TRIM
E11	DECORATIVE TRUSS & TRIM PAINTED COLOR TBD
E12	CULTURED STONE VENEER PIER WITH CONCRETE CAP
E13	STANDING SEAM METAL ROOF, COLOR TBD
E14	"MIRATEC" AND "EXTIRA" COMPOSITE BOARDS (PANEL & TRIMS) PAINTED, COLOR TBD
E15	"SMARTSIDE" ENGINEERED WOOD TRIM BOARDS FACTORY FINISHED COLOR TBD
E16	CUPOLA (CONTRACTORS OPTION TO BUILD IN PLACE OR INSTALL PREMENUACTURED UNIT)
E17	CABLE PIPE RAIL WITH PAINTED POSTS COLOR TBD
E18	ROOF CANOPY WITH ASPHALT SHINGLES AND "SMARTSIDE" FASCIA BOARDS & SOFFITS

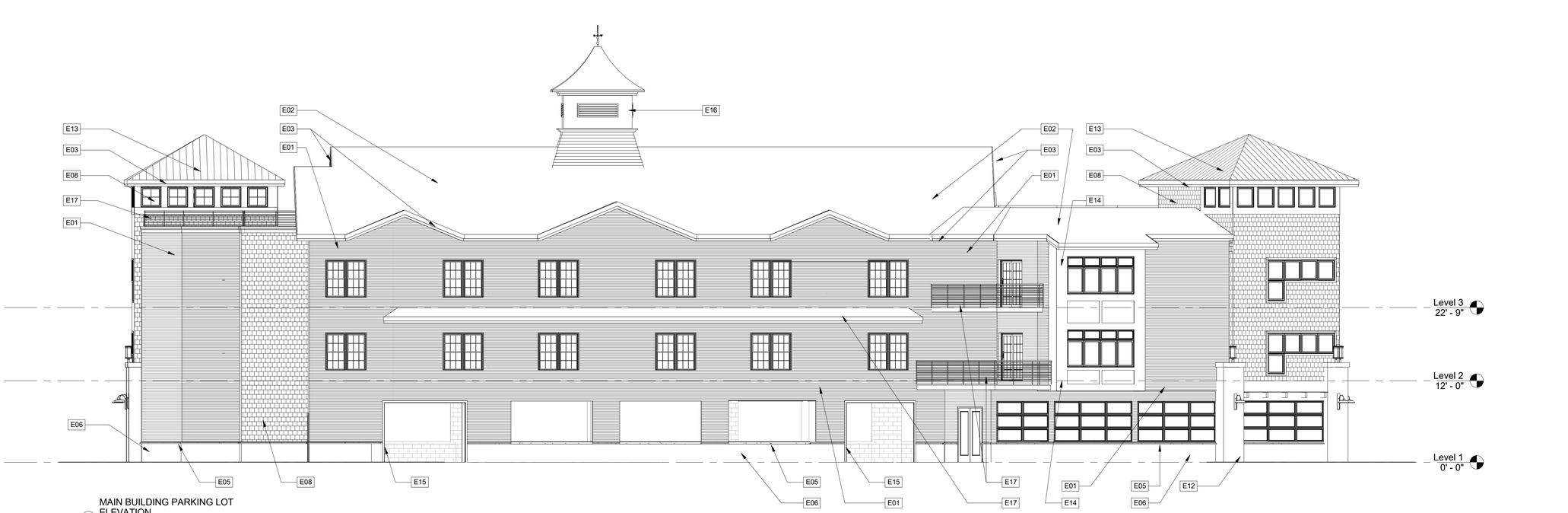

1 MAIN BUILDING PARKING LOT ELEVATION
1/8" = 1'-0"

6/22/16

RE4ORM ARCHITECTURE
323 CLINTON STREET
SCHENECTADY, NY 12305
P:518.399.4174
F:518.399.4105
WWW.RE4ORMARCHITECTURE.COM

246 WEST AVE APARTMENTS

246 WEST AVE
SARATOGA SPRINGS, NY

EXTERIOR ELEVATION

A202

CONTRACTOR SHALL VERIFY ALL DIMENSION AT SITE. UNAUTHORIZED ALTERATIONS OR ADDITIONS TO THIS DOCUMENT IS A VIOLATION OF THE NEW YORK STATE EDUCATION LAW.

Site Plan
246 West Avenue Apartments

City of Saratoga Springs, New York

City PB#

June 23, 2016

Vicinity Map:

SCALE: NTS

CITY OF SARATOGA SPRINGS
STANDARD NOTES

1. All work must conform to all Federal, State and City Codes, specifications, ordinances, rules and regulations.
2. The elevation base for the contours and benchmarks are based on the National Geodetic Vertical Datum, 1929.
3. All refuse, debris and miscellaneous items to be removed shall be legally disposed of off-site by the Contractor to a location approved by the City Engineer.
4. The Contractor must set up a pre-construction meeting with the City Engineer prior to any construction. Construction inspections by the a designated representative of design professional are required. The cost of the construction inspection is the responsibility of the Applicant/Developer.
5. The contractor must obtain a blasting permit from the Building Inspector if any blasting is required for the project.
6. The contractor must obtain a street opening permit issued by the Department of Public Works for any work in the street or right-of-way of any City street, road or alley.
7. All points of construction ingress or egress shall be maintained to prevent tracking or flowing of sediment or debris onto a public road.
8. No Certificate of Occupancy will be issued until all site work has been completed in accordance with the approved plans; and an as-built drawing has been prepared in accordance with the requirements of the City Engineer.
9. The applicant must verify that the proposed project can accommodate the turning movements of any fire truck that the fire department so designates.

Approval

Approved under authority of a resolution adopted _____
by the Planning Board of the City of Saratoga Springs.

_____ Chairperson

Date Signed _____

SITE STATISTICS

PROPOSED USE:	16 Apartments	
TAX MAP PARCEL NUMBER	178.33-1-20&21	
LEASE LOT SIZE	.51 ACRES	
EXISTING ZONING	T-4 Urban Neighborhood	
BUILDING SETBACKS	REQUIRED	PROPOSED
BUILD-TO-LINE	12'-18'	12.5'
FRONTAGE BUILDOUT	50%MIN.	63%
SIDE SETBACK	12' AVERAGE PRINCIPAL BLDG	15.5'
	6' MIN OUTBUILDING	8.02'
REAR SETBACK	24' PRINCIPAL BLDG	27.07'
	5' MIN OUTBUILDING	9.34'
BUILDING HEIGHT	2 STORY MIN, 40' MAX HT.	3 STORY, 40'-0"
PARKING REQUIREMENTS		
RESIDENCES WITHIN T-4 ZONE		
1.5 PER DWELLING UNIT	24 SPACES	24 SPACES 7 SPACES OUTSIDE BUILDINGS 17 SPACES WITHIN THE BUILDINGS

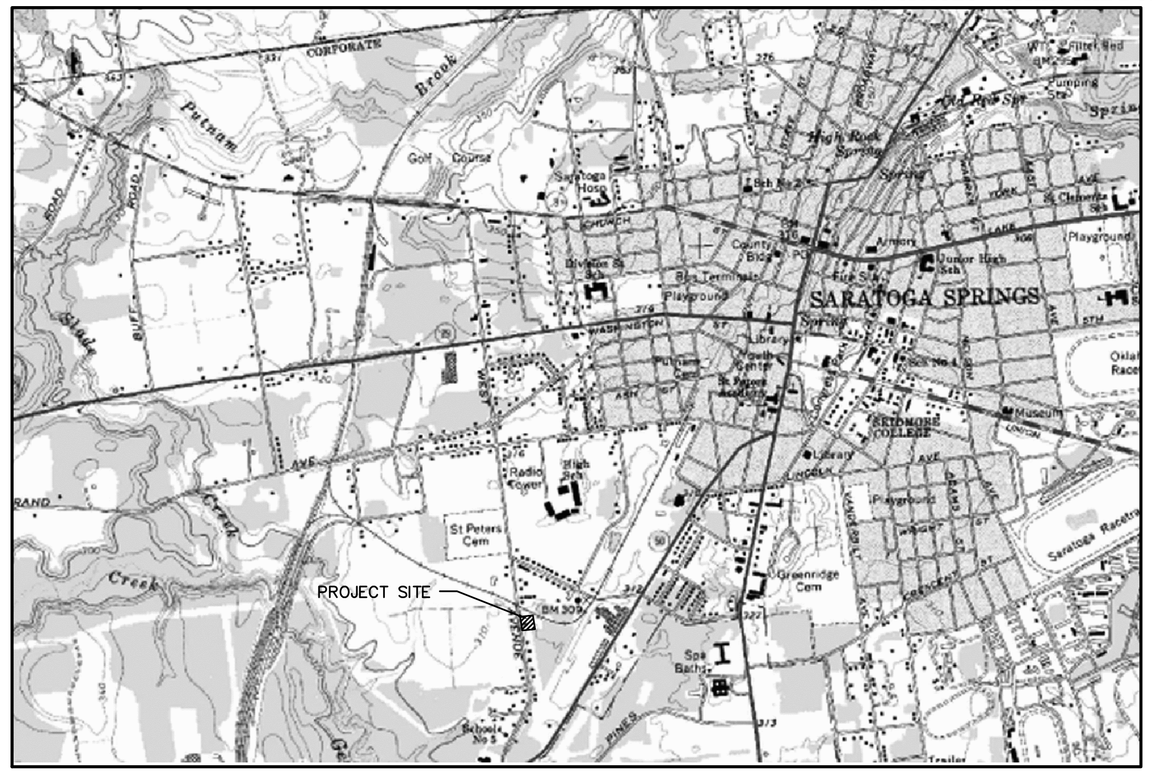

Project Location Map:

SCALE: NTS

SHEET INDEX:

	COVER SHEET
	BOUNDARY AND TOPOGRAPHIC SURVEY
L-1	SITE DEMOLITION AND PREPARATION PLAN
L-2	SITE LAYOUT AND MATERIALS PLAN
L-3	SITE GRADING AND DRAINAGE PLAN
L-4	SITE UTILITY PLAN
L-4.1	OFF-SITE WATERLINE CONNECTION
L-5	SITE LANDSCAPE PLAN
L-6	SITE LIGHTING PLAN
L-7	SITE DETAILS
L-8	SITE DETAILS
L-9	SITE DETAILS
L-10	SITE DETAILS
L-11	STORMWATER DETAILS
L-12	SITE DETAILS

Applicant:

John-Paul Builders, LLC
796 Burdeck Street
Schenectady, NY 12306

Prepared By:

the LA group
Landscape Architecture
and Engineering, P.C.

40 Long Alley
Saratoga Springs
New York 12866
518/587-8100
Telefax 518/587-0180

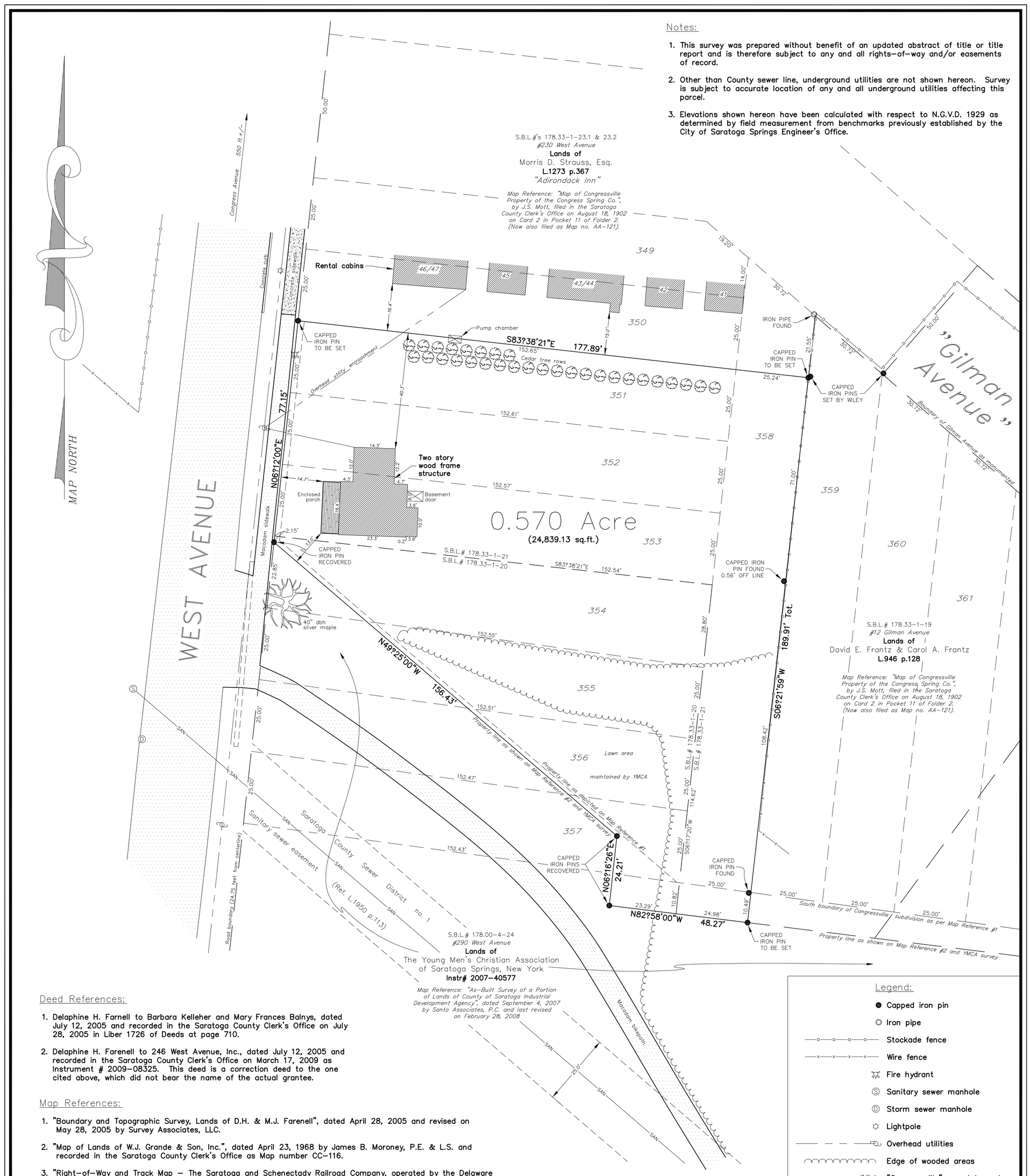

Notes:

1. This survey was prepared without benefit of an updated abstract of title or title report and is therefore subject to any and all rights-of-way and/or easements of record.
2. Other than County sewer line, underground utilities are not shown hereon. Survey is subject to accurate location of any and all underground utilities affecting this parcel.
3. Elevations shown hereon have been calculated with respect to N.G.V.D. 1929 as determined by field measurement from benchmarks previously established by the City of Saratoga Springs Engineer's Office.

Deed References:

1. Delaphine H. Farnell to Barbara Kelleher and Mary Frances Balnys, dated July 12, 2005 and recorded in the Saratoga County Clerk's Office on July 28, 2005 in Liber 1726 of Deeds at page 710.
2. Delaphine H. Farenell to 246 West Avenue, Inc., dated July 12, 2005 and recorded in the Saratoga County Clerk's Office on March 17, 2009 as Instrument # 2009-08325. This deed is a correction deed to the one cited above, which did not bear the name of the actual grantee.

Map References:

1. "Boundary and Topographic Survey, Lands of D.H. & M.J. Farenell", dated April 28, 2005 and revised on May 28, 2005 by Survey Associates, LLC.
2. "Map of Lands of W.J. Grande & Son, Inc.", dated April 23, 1968 by James B. Moroney, P.E. & L.S. and recorded in the Saratoga County Clerk's Office as Map number CC-116.
3. "Right-of-Way and Track Map - The Saratoga and Schenectady Railroad Company, operated by the Delaware & Hudson Company, Saratoga Division - Main Line - Ballston Spa to Saratoga Springs, Station 1951+85.5 to Station 2005+90", dated June 30, 1916 and filed in the offices of C.P. Rail.
4. Map no. 37, Parcel no. 44 for the Grade Crossing Eliminations of the Railroad operated by the Delaware & Hudson Railroad Corporation through the City of Saratoga Springs and the Towns of Greenfield and Wilton", dated August 5, 1957 and filed in the Saratoga County Clerk's Office. Notice of appropriation was recorded in Liber 658 of Deeds at page 169.

Legend:

- Capped iron pin
- Iron pipe
- Stockade fence
- Wire fence
- Fire hydrant
- Sanitary sewer manhole
- Storm sewer manhole
- Lightpole
- Overhead utilities
- Edge of wooded areas
- 354 "Congressville" map lot number

PREPARED FOR:
THE PIKE COMPANY
210 CLIFTON CORPORATE PARKWAY
CLIFTON PARK, N.Y. 12065

REV.	DATE	BY	CHK.	DESCRIPTION
2	06/29/12	DRP	ACS	PROPERTY LINES REVISED
1	10/31/11	AJS	ACS	PROPOSED BOUNDARY LINE AGREEMENT
0	09/30/11	SRS	ACS	ORIGINAL SURVEY DATE

Certifications indicated hereon signify that this survey was prepared in accordance with the existing Code of Practice of Land Surveys adopted by the N.Y. State Association of Professional Land Surveyors. Said certifications shall run only to the title insurance company, governmental agency, and lending institution listed hereon and to the assignees of the lending institution. Certifications are not transferable to additional institutions or subsequent owners.

Unauthorized alteration or addition to a survey map bearing a licensed land surveyor's seal is a violation of Section 7209, Subdivision 2 of the N.Y. State Education Law. Only copies from the original of this survey marked with an original of the land surveyor's embossed seal shall be considered to be valid copies.

In addition, only copies from the original of this survey marked with an original of the land surveyor's signature in RED shall be considered to be valid copies.

SANTO ASSOCIATES
LAND SURVEYING AND ENGINEERING, P.C.
1 BARNEY ROAD • SUITE 109
CLIFTON PARK, NY 12065
PHONE: (518) 383-8001 • FAX: (518) 383-6026

(C) 2011 Santo Associates P.C. "All Rights Reserved"
"Unauthorized Duplication is a Violation of Applicable Laws."

ANDREW C. SCHAUFFERT, L.S. LICENSE NO. 049901

SURVEY MAP OF LANDS OF

246 WEST AVENUE, INC.

AT 246 WEST AVENUE, SARATOGA SPRINGS, N.Y. 12866

DRAWN BY: SRS	CITY OF: SARATOGA SPRINGS	SCALE: 1" = 20'
CHECKED BY: ACS	COUNTY OF: SARATOGA	DWG. NO.: 7277
DATE: 09/30/11	STATE OF: NEW YORK	REV.: 2

LANDS OF
DAVID E. FRANTZ & CAROL A.
FRANTZ

Rental cabins

41

42

43/44

45

46/47

Cedar tree rows

EXISTING CEDAR HEDGE TO BE RELOCATED COORDINATE LOCATION WITH OWNER OF "ADIRONDACK INN", CONTRACTOR TO GUARANTEE THE TRANSPLANTED TREES FOR ONE YEAR. REPLACEMENT TREES IF NEEDED WILL BE ARBORVITAE 8'–10' HT.

Pump chamber

PUMP CHAMBER TO BE REMOVED COORDINATE LOCATION AND REMOVAL WITH OWNER OF "ADIRONDACK INN"

LANDS OF
MORRIS D. STRAUSS, ESQ.
"ADIRONDACK INN"

Two story wood frame structure

Basement door

Enclosed porch

Overhead utility

B1

B2

B3

B4

B5

SILT FENCE (TYP.)

DISEASED TREE TO BE REMOVED

6" dbl silver maple

LANDS OF
THE YOUNG MEN'S CHRISTIAN
ASSOCIATION
OF SARATOGA SPRINGS

Saratoga County Sewer District no. 1

Sanitary sewer easement (Ref. L.1950

Concrete sidewalk

Macadam sidewalk

Concrete curb

EXISTING HYDRANT TO BE REMOVED, PIPE AND CAP LINE PROPERLY

2 L–12 STABILIZED CONSTRUCTION ENTRANCE

EXISTING CULVERT PIPE TO BE REMOVED

Invert=302.50

WEST AVENUE

Existing 36" dia

307 308 309 310 311

SF JS SAN

SITE PREPARATION & DEMOLITION NOTES:

1. ALL REFUSE, DEBRIS AND MISCELLANEOUS ITEMS TO BE REMOVED, THAT ARE NOT TO BE STOCKPILED FOR LATER USE ON THE PROJECT OR DELIVERED TO THE OWNER, SHALL BE LEGALLY DISPOSED OF OFF–SITE BY THE CONTRACTOR.
2. ALL ITEMS REQUIRING REMOVAL SHALL BE REMOVED TO FULL DEPTH TO INCLUDE BASE MATERIAL AND FOOTINGS OR FOUNDATIONS AS APPLICABLE, AND REUSED AS DIRECTED BY THE OWNER OR LEGALLY DISPOSED OF OFF–SITE BY CONTRACTOR.
3. CONTRACTOR SHALL STRIP AND STOCKPILE EXISTING TOPSOIL TO FULL DEPTH WITHIN LIMIT OF GRADING BEFORE COMMENCING EXCAVATION AND GRADING OPERATIONS. TOPSOIL SHALL NOT BE REMOVED FROM THE SITE, UNLESS APPROVED BY THE OWNER'S REPRESENTATIVE.
4. THE CONTRACTOR IS RESPONSIBLE FOR ANY DAMAGE TO EXISTING CONDITIONS THAT ARE DUE TO CONTRACTOR OPERATIONS AND WHICH ARE OUTSIDE THE LIMIT OF WORK.
5. THE CONTRACTOR SHALL COORDINATE ALL ADJUSTMENT OR ABANDONMENT OF UTILITIES WITH THE RESPECTIVE UTILITY COMPANY AND PAY ALL ASSOCIATED COSTS.
6. ALL POINTS OF CONSTRUCTION INGRESS AND EGRESS SHALL BE PROTECTED TO PREVENT TRACKING OF MUD ONTO PUBLIC WAYS. ANY MUD ON PUBLIC WAYS ORIGINATING FROM THE JOB SITE SHALL BE CLEANED BY THE CONTRACTOR DAILY.
7. CONTRACTOR SHALL SECURE ALL PERMITS THAT MAY BE REQUIRED FROM ALL JURISDICTIONS AFFECTED BY THIS WORK.
8. ANY TREE AND SHRUB REMOVAL SHALL INCLUDE THE FILLING, CUTTING, GRUBBING OUT OF ENTIRE ROOT SYSTEM AND SATISFACTORY OFF–SITE DISPOSAL OF ALL TREES, SHRUBS, STUMPS, VEGETATIVE AND EXTRANEOUS DEBRIS PRODUCED THROUGH THE REMOVAL OPERATIONS.
9. CONTRACTOR SHALL APPLY FOR AND OBTAIN DEMOLITION PERMIT FROM CITY PRIOR TO ANY DEMOLITION WORK ON–SITE. EXISTING WATER AND SEWER DISCONNECTIONS MUST BE DEMONSTRATED TO CITY ENGINEER.

BORING RESULTS FROM GEOTECHNICAL EVALUATION FOR PROPOSED OFFICE COMPLEX: PREPARED BY, DENTE ENGINEERING: APRIL 2005

BORING 1:
0–8" TOPSOIL
8"–96" BROWN F–M SAND, TRACE SILT: WET AT 84"
96"–21' GRADES F–C SAND, LITTLE FINE GRAVEL, TRACE SILT
21'–26' GRADES DARK GRAY
26'–31' GRADES GRAY FINE SAND, TRACE SILT
31'–46' GRAY F–M SAND, SOME SILT
46'–51' GRADES SILT, TRACE FINE SAND
51'–52' GRADES FINE SAND, TRACE SILT

BORING 2:
0–10" TOPSOIL
10"–60" BROWN F–M SAND, TRACE SILT
60"–84" BROWN FINE SAND & SILT WITH PARTINGS FINE SAND, TRACE SILT
84"–17' FROWN F–C SAND, TRACE TO LITTLE FINE GRAVEL, TRACE SILT: WET AT 84"

BORING 3:
0–12" TOPSOIL BECOMES BROWN F–M SAND TRACE SILT
12"–9' DARK BROWN F–M SAND, TRACE SILT: WET AT 9'
9'–16' BROWN F–C SAND, TRACE TO LITTLE FINE GRAVEL, TRACE SILT
16'–17' BECOMES GRAY SAND

BORING 4:
0–12" TOPSOIL BECOMES BROWN F–M SAND, TRACE SILT
12"–96" BROWN F–M SAND, TRACE SILT
96"–10' MOTTLED SILT, SOME FINE SAND: WET AT 10'
10'–16' BROWN F–C SAND, TRACE SILT
16'–17' GRADES TRACE FINE GRAVEL

BORING 5:
0–8" TOPSOIL
8"–84" BROWN F–M SAND, SOME SILT TRACE GRAVEL: POSSIBLE FILL: WET AT 60"
84"–16' BROWN F–C SAND TRACE GRAVEL & SILT
16'–17' BECOMES GRAY/BROWN SAND

LEGEND

- EXISTING BUILDING OR PAVEMENT TO BE REMOVED
- EXISTING VEGETATION TO BE REMOVED
- SF SILT FENCE TYP. (3 / L–11)

GRAPHIC SCALE
10 0 5 10 20
1 inch = 10 feet

Approval

Approved under authority of a resolution adopted _____ by the Planning Board of the City of Saratoga Springs.

_____ Chairperson

Date Signed _____

the LA group
Landscape Architecture and Engineering, PC
40 Long Alley
Saratoga Springs
New York 12866
P 518/587-8100
F 518/587-0180
www.thelagroup.com

Unauthorized alteration or addition to this document is a violation of Section 7209 of the New York State Education Law

© the LA Group 2008

Design MCB
Drawn MCB
Checked CMI

PREPARED FOR:
John-Paul Builders, LLC
796 Burdeck Street
Schenectady, NY 12306

246 WEST AVENUE APARTMENTS

SARATOGA SPRINGS, NY

Title
SITE DEMOLITION AND PREPERATION PLAN

Revisions

City #:
Project: 201178
Date: 6/23/2016

Drawing
L-1

Plotted By: ANDREW LONGLACKER
Save Date: 6/22/2016 11:19 PM
File Name: C:\Proj\201178\CAD\L1\L1_West_Ave_246\201178CAD1_L1_EC.dwg

LANDS OF
DAVID E. FRANTZ & CAROL A.
FRANTZ

CONCRETE DUMPSTER PAD WITH FENCE ENCLOSURE (8/L-8)
DO NOT ENTER SIGN
PARKING LOT LIGHT POLE (6/L-8, 1/L-6)
PAVEMENT MARKING
LAWN
24' REAR YARD BUILDING SETBACK LINE
STONE DRIP STRIP TYP.
CONCRETE TRANSITION CURB (3/L-7)
CONCRETE CURB TYP. (2/L-7)
GRAVEL DRIP STRIP TYP.
BUILDING OVERHANG TYP.
BUILDING FOOTPRINT LINE TYP.
EXISTING ASPHALT BIKE PATH.
ASPHALT PAVING (1/L-7)
STONE DRIP STRIP TYP.
KNOX BOX LOCATION
12' FRONT BUILD TO LINE
STOP SIGN. (8/L-7)
DETECTABLE WARNING STRIP TYP. (11/L-7)
6' WIDE BENCH (4/L-12)
INTERPRETIVE SIGN (8/L-12)
PROPOSED BIKE RACK (9/L-12)
CONCRETE PAVERS (12/L-7)
EXISTING STREET LIGHT
DECORATIVE STREET LIGHT (4/L-8)
UTILITY POLE TO REMAIN
CONCRETE PAVEMENT ENTRANCE (7/L-7)
CONCRETE WALK TYP. (5/L-7)
Concrete sidewalk
Macadam sidewalk
Concrete curb
Cedar Trees & Bushes
Rental cabins
41
42
43/44
45
46/47
LANDS OF
MORRIS D. STRAUSS, ESQ.
"ADIRONDACK INN"
LANDS OF
THE YOUNG MEN'S CHRISTIAN
ASSOCIATION
OF SARATOGA SPRINGS
Saratoga County Sewer District no. 1
Sanitary sewer easement (Ref. L.1950 p.113)
Existing 36" dia
WEST AVENUE

LAYOUT NOTES

1. ALL LINES AND DIMENSIONS ARE PARALLEL OR PERPENDICULAR TO THE LINES FROM WHICH THEY ARE MEASURED UNLESS OTHERWISE INDICATED.
2. ALL LINE AND GRADE PER DRAWINGS SHALL BE LAID OUT BY A NEW YORK STATE REGISTERED CIVIL ENGINEER OR SURVEYOR ENGAGED BY THE CONTRACTOR. ALL STAKED LAYOUTS OF PAVEMENTS AND SITE IMPROVEMENTS SHALL BE APPROVED BY THE OWNER'S REPRESENTATIVE PRIOR TO INSTALLATION.
3. STORAGE AREAS FOR CONTRACTOR'S EQUIPMENT AND MATERIALS SHALL BE ON AND WITHIN LIMITS OF WORK AS SHOWN ON THE PLANS AND AS APPROVED BY THE OWNER'S REPRESENTATIVE.
4. THE CONTRACTOR SHALL VERIFY ALL EXISTING CONDITIONS IN THE FIELD PRIOR TO CONSTRUCTION AND REPORT ANY DISCREPANCIES IN THE SITE SURVEY TO THE OWNER'S REPRESENTATIVE PRIOR TO STARTING WORK.
5. AT ALL LOCATIONS WHERE EXISTING CURBING, BITUMINOUS CONCRETE ROADWAY OR CONCRETE SIDEWALK ABUT NEW CONSTRUCTION, THE EDGE OF THE EXISTING CURB OR PAVEMENT SHALL BE SAW CUT TO A CLEAN, SMOOTH EDGE. PROVIDE PAVEMENT KEY AS DETAILED. TACK COAT EXPOSED EDGES OF EXISTING BITUMINOUS CONCRETE PRIOR TO PLACEMENT OF NEW BITUMINOUS CONCRETE PAVEMENT.
6. BITUMINOUS PAVEMENT SHALL NOT BE LAID WHEN GROUND TEMPERATURE IS LESS THAN 40° F. AND AIR TEMPERATURE IS LESS THAN 50° F.
7. ALL LIGHT STANDARDS SHALL BE LOCATED AT A MINIMUM OF TWO FEET SIX INCHES (2'-6") FROM BACK OF EOP; VERIFY W/ OWNER'S REPRESENTATIVE PRIOR TO INSTALLATION.
8. DIMENSIONS ON PARKING LOTS AND ROADWAYS ARE FROM FACE OR BOTTOM OF CURB TO FACE OR BOTTOM OF CURB.
9. ALL NEW WORK SHALL BE STAKED-OUT PRIOR TO CONSTRUCTION. THE OWNER'S REPRESENTATIVE SHALL BE NOTIFIED OF ANY DISCREPANCIES.
10. FIELD ADJUSTMENTS MUST BE APPROVED BY THE OWNER'S REPRESENTATIVE AND CITY ENGINEER WITHOUT EXCEPTION.
11. ALL EXISTING UTILITIES SHOWN IN THEIR RELATIVE POSITION. THE CONTRACTOR IS RESPONSIBLE FOR VERIFYING THE VERTICAL AND HORIZONTAL POSITION OF EXISTING UTILITIES PRIOR TO CONSTRUCTION.

LEGEND

- CURB
- CONCRETE SIDEWALK (SC, EJ)
- PROPERTY LINE
- POWER LINE EASEMENT
- ACCESSIBLE PARKING
- TRAFFIC PATTERN ARROW
- SIGNAGE
- REINFORCED SWALE

GRAPHIC SCALE
10 0 5 10 20
1 inch = 10 feet

Approval

Approved under authority of a resolution adopted _____ by the Planning Board of the City of Saratoga Springs.

_____ Chairperson

Date Signed _____

the LA group
Landscape Architecture and Engineering, PC
40 Long Alley
Saratoga Springs
New York 12866
P 518/587-8100
F 518/587-0180
www.thelagroup.com

Unauthorized alteration or addition to this document is a violation of Section 7209 of the New York State Education Law

© the LA Group 2008

Design MCB
Drawn MCB
Checked CMI

PREPARED FOR:
John-Paul Builders, LLC
796 Burdeck Street
Schenectady, NY 12306

246 WEST AVENUE APARTMENTS

SARATOGA SPRINGS, NY

Title: SITE LAYOUT AND MATERIALS PLAN

Revisions

City #:
Project: 201178
Date: 6/23/2016

Drawing
L-2

Plotted By: MATT BRUBSTEIN
Plot Date: 6/23/2016 9:32:3 AM
File Name: G:\Projects\201178_West_Ave_2482\201178CADs\2_LAYOUT.dwg

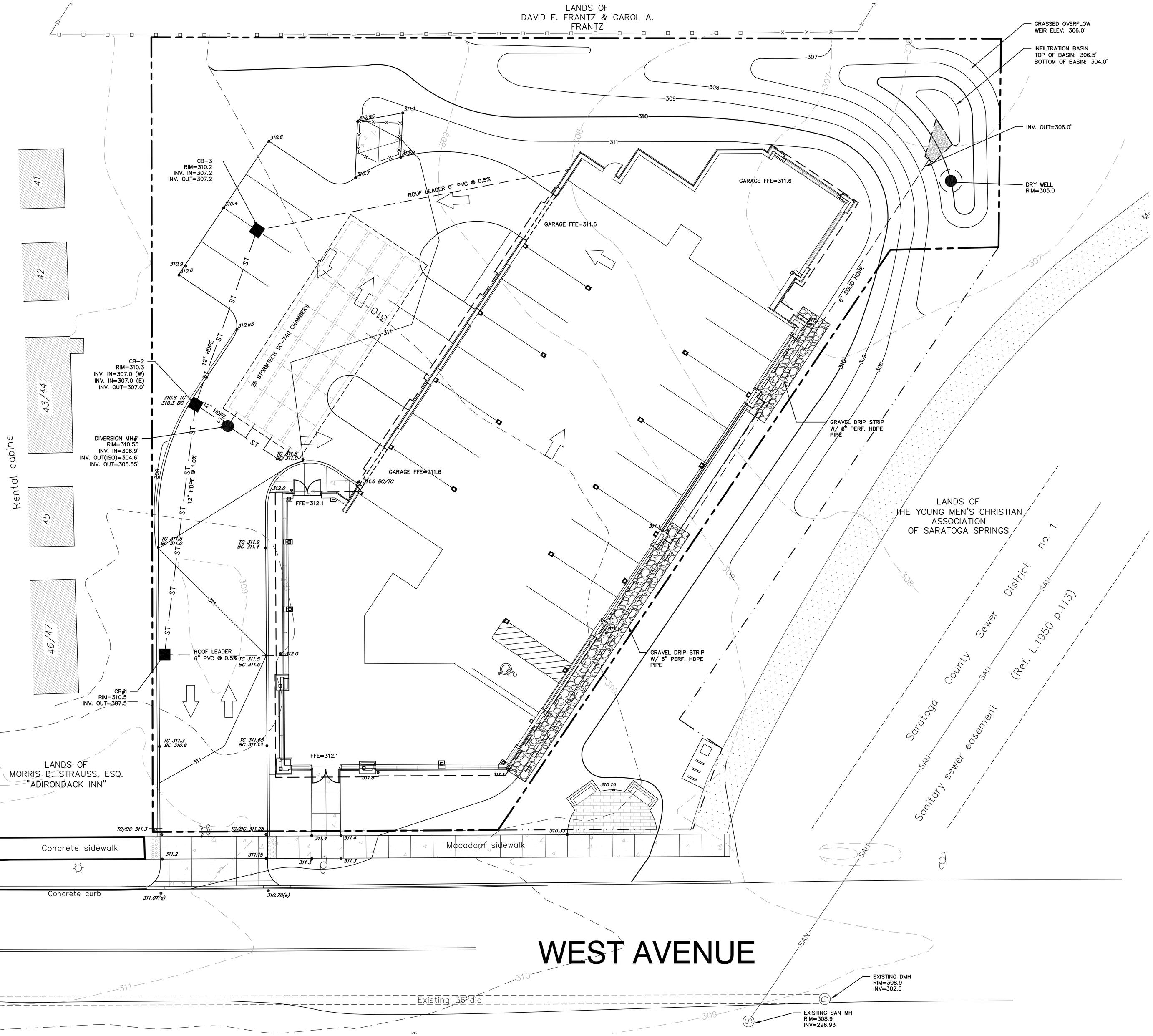

GRADING NOTES

1. SURVEY INFORMATION PROVIDED BY SANTO ASSOCIATES LAND SURVEYING AND ENGINEERING, P.C., BASED UPON A FIELD SURVEY COMPLETED SEPTEMBER 30, 2011
2. ALL GRADES SET IN THE FIELD SHALL BE COMPLETED BY A NEW YORK STATE LICENSED LAND SURVEYOR.
3. THE CONTRACTOR SHALL VERIFY ALL CONDITIONS IN THE FIELD AND REPORT ANY DISCREPANCIES BETWEEN THE PLANS AND ACTUAL CONDITIONS TO THE OWNER'S REPRESENTATIVE.
4. THE CONTRACTOR SHALL VERIFY PROPOSED GRADES PRIOR TO CONSTRUCTION AND REPORT ANY DISCREPANCIES TO THE OWNER'S REPRESENTATIVE.
5. THE CONTRACTOR SHALL PROVIDE DUST AND EROSION CONTROL AS APPROVED BY THE OWNER'S REPRESENTATIVE.
6. ALL FILL SLOPES 3:1 OR GREATER SHALL RECEIVE BIO-DEGRADEABLE FABRIC OR APPROVED EQUAL FOR EROSION CONTROL, UNLESS OTHERWISE SHOWN OR DIRECTED BY THE OWNER'S REPRESENTATIVE.
7. THE CONTRACTOR SHALL BLEND ALL NEW EARTHWORK INTO EXISTING GRADES AT THE LIMITS OF GRADING. PROVIDE SMOOTH ROUNDED TRANSITIONS AT ALL TOP AND BOTTOM OF SLOPES.

LEGEND

- 320 — EXISTING CONTOUR LINE
- 320 — PROPOSED CONTOUR LINE
- EXISTING STORM MAIN
- PROPOSED STORM MAIN
- PROPOSED BUILDING DRAINAGE LINES
- PROPOSED DRYWELL
- PROPOSED CATCH BASIN
- EXISTING SANITARY SEWER MANHOLE
- SAN — EXISTING SANITARY SEWER MAIN LINE

GRAPHIC SCALE

10 0 5 10 20

1 inch = 10 feet

Approval

Approved under authority of a resolution adopted by the Planning Board of the City of Saratoga Springs.

Chairperson

Date Signed

the LA group
Landscape Architecture and Engineering, PC
40 Long Alley
Saratoga Springs
New York 12866
P 518/587-8100
F 518/587-0180
www.thelagroup.com

Unauthorized alteration or addition to this document is a violation of Section 7209 of the New York State Education Law

© the LA Group 2008

Design MCB
Drawn MCB
Checked CMI

PREPARED FOR:
John-Paul Builders, LLC
796 Burdeck Street
Schenectady, NY 12306

246 WEST AVENUE APARTMENTS

SARATOGA SPRINGS, NY

Title
SITE GRADING AND DRAINAGE PLAN

Revisions

City #:
Project: 201178
Date: 6/23/2016

Drawing
L-3

LANDS OF
DAVID E. FRANTZ & CAROL A.
FRANTZ

LANDS OF
THE YOUNG MEN'S CHRISTIAN
ASSOCIATION
OF SARATOGA SPRINGS

LANDS OF
MORRIS D. STRAUSS, ESQ.
"ADIRONDACK INN"

GARAGE FF ELEV.=311.6

FF ELEV.=312.1

SANITARY INV=303.10

3 L-10 SANITARY CLEANOUT
INV=304.58

Concrete sidewalk

Macadam sidewalk

Concrete curb

WEST AVENUE

6" D.I.P. WATERLINE

54 LF - 6" PVC SDR26 @ 5.0%

4 L-9 INSTALL 12"X6" TEE, 6" GATE VALVE,
AND 12" BUTTERFLY VALVE

12" D.I.P. WATERMAIN

SEE SHEET L-4.1 FOR OFF-SITE WATERLINE

1 L-9

5 L-9

Existing 36"dia

56 LF - 8" C-900 @ 0.5%

SMH-1
RIM=309.75
6" INV IN=300.4
8" INV OUT=299.91

1 L-10

EXISTING SAN MH
RIM=308.9
INV=296.93
INSIDE DROP CONNECTION
8" INV IN=299.63

CAP END FOR FUTURE CONNECTION

Saratoga County Sewer District no. 1

Sanitary sewer easement (Ref. L.1950 p.113)

43/44

45

46/47

WATER SYSTEM NOTES

A. The location of underground utilities shown on this plan are for information only, and all utilities may not be shown. The Contractor shall contact U.F.P.O. (1-800-962-7962) and the proper local authorities or respective utility company having jurisdiction to field verify the location of all existing utilities before commencing work. Any costs incurred by the Contractor due to failure to contact the proper authorities shall become the responsibility of the Contractor.

B. Extend designated limit of work as necessary to accomplish site utility work as required by these Drawings and Specifications.

C. Water Service lines 4-inch and larger:

1. Pipe and Fittings
   a. Ductile Iron Pipe: Class 52, ANSI/AWWA C151/A21.51
   b. Mechanical Joint fittings: ANSI standard A21.10 and A21.11 (AWWA C110 and C111) Class 350.
2. Coatings
   a. Double cement mortar lining on interior and coal tar seal coat on interior and exterior in accordance with ANSI/AWWA C104/A21.11
3. Joints
   a. Conforming with ANSI/AWWA C111/A21.11
   b. Pipe – push on joint.
   c. fittings – mechanical joint, plain rubber gasket together with retainer glands having steel set screws.
4. Valve Boxes
   a. Cast iron two piece valve box as manufactured by Clow (Model F2454), or approved equal.
   b. Cover must be stay-put type (Clow Model F2490), or approved equal, and be clearly marked "Water."
5. Anchorage
   a. Concrete thrust blocks must be used at all changes in direction of 11 1/4° or greater, and at all tees, caps, fittings, hydrants and plugs.

D. Water service lines 2 1/2-inch and smaller (no line shall be smaller than 3/4-inch):

1. Pipe
   a. Copper water tube, type K, soft temper for underground service.
2. Corporation Stops
   a. Mueller H-15008 with AWWA inlet threads or approved equal.
   b. Valves 1 1/2-inch and larger must be used with tapping sleeve.
3. Curb-stop
   a. Mueller H-15209 or H-15219 curb-stops, non-draining or approved equal.
4. Couplings
   a. Mueller H-15403 110 compression connections or approved equal; three part union for copper-to-copper type connection.
5. Curb-box
   a. Mueller H-10314
   b. Extension type with arch pattern base or approved equal.
   c. Solid cover (Mueller or approved equal).
   d. Stationary rod.

E. Valves, Hydrants, etc.:

1. Valves – Mueller A-2380-20
   a. All valves under 12-inches in diameter shall be mechanical joint resilient wedge (R/W).
   b. R/W valves, 3-inches and larger, shall be iron body, non-rising stem conforming to AWWA C509. Gland bolts shall be zinc coated steel.
   c. All valves shall have a maximum working pressure rating of 200 psig.
   d. All valves shall have mechanical joint ends conforming to ANSI A21.10/A21.11
   e. Valves shall open right (clockwise) with a standard 2-inch square operating nut with arrow cast on it showing the direction of opening.
   f. Each valve shall be furnished complete with necessary nuts, bolts, studs and gaskets.
2. Butterfly Valves – Mueller Lineseal III
   a. With the exception of tapping valves, all valves 12-inches in diameter and larger shall be Mueller, or approved equal, butterfly valves.
   b. Butterfly valves, 12-inches and larger, shall be iron body, bronze mounted, 360-degree rubber seat with stainless steel shaft conforming to AWWA C504. gland bolts shall be zinc coated steel.
   c. All valves shall have a minimum working pressure rating of 200 psi.
   d. All valves shall have mechanical joint ends conforming to ANSI A21.10, A21.11.
   e. Valves shall open right (clockwise) with a standard 2-inch square operating nut with arrow cast on it showing the direction of opening.
   f. Valve shall operate using traveling nut.
   g. The valve disk shall hold at any position without fluttering or creeping.
   h. The valve shall be equipped with a mechanical stop to prevent overtravel.
   i. Each valve shall be furnished complete with necessary nuts, bolts, studs, and gaskets which conform to AWWA C-110, AWWA C-111.
3. Fire Hydrants shall be Mueller A-423 compression-type hydrant, or approved equal having the following features
   a. 5 1/4-inch valve opening with a 6-inch inlet.
   b. Two (2) 2 1/2-inch hose nozzle and one (1) 4" Storz pumper nozzle; national standard thread.
   c. Operating nut shall be national standard, pentagon shaped, 1/8-inch point to flat.
   d. Break flange – traffic type construction
   e. Open right (clockwise)
   f. Hydrants are to be painted a minimum of one (1) coat primer and one (1) finish coat of industrial enamel as per paint schedule.

F. Water mains and services shall be installed at a minimum cover depth below finished grade of 5'-0".

G. Chlorination, pressure and leakage tests of water mains shall be in conformance with the specifications, NYSDOH regulations, and AWWA Standards and shall be performed under the supervision of the Owner's Representative and City Engineer. Bacteria examination after disinfection at a NYSDOH approved laboratory will take place prior to turning water main over to the Owner.

H. Water valve boxes, existing structure rims, new structure rims, etc., shall be adjusted to conform to new finished pavement grades unless otherwise noted and/or directed by Owner's Representative.

SEWER SYSTEM NOTES

1. Installation of polyvinyl chloride plastic (PVC) sewer pipe shall be in accordance with manufacturer's installation recommendations, and in accordance with ASTM D 2321.
2. Manhole frames and covers shall be Campbell Foundry Co. pattern No. 12038 or approved equal. The cover shall be embossed with "City of Saratoga Springs Sanitary Sewer". Provide (4) 7/8" dia. vent holes in cover.
3. Sanitary sewer manholes shall be precast reinforced concrete, complying with ASTM C 478. Base section to be pre-cast with integral floor. Top section shall be precast eccentric cone or flat slab traffic top as required. Steps of copolymer polypropylene integrally cast into the manhole sidewalls. Pipe to manhole connection shall be "Press-Wedge II" seal, or approved equivalent.
4. All sewer piping and fittings shall conform to the Standard Specifications for PVC pipe, ASTM designation D-3034-78 or latest revision and to the dimensions and tolerances of classification SDR-26 with single gasket push-on joints.
5. Product data information and shop Drawings for materials proposed for use by the contractor shall be submitted to and approved by the Architect prior to the placement of any orders for said materials.
6. Leakage outward or inward shall not exceed 200 gallons per inch of pipe diameter per mile per day for any section of the system. Leakage test shall be performed with a minimum positive head of 2 feet.

LEGEND

- 320 — EXISTING CONTOUR LINE
- 320 — PROPOSED CONTOUR LINE
- EXISTING STORM MAIN
- PROPOSED STORM MAIN
- PROPOSED BUILDING DRAINAGE LINES
- PROPOSED DRYWELL
- PROPOSED CATCH BASIN
- EXISTING SANITARY SEWER MANHOLE
- PROPOSED SANITARY SEWER MANHOLE
- SAN — EXISTING SANITARY SEWER MAIN LINE
- PROPOSED SANITARY SEWER MAIN LINE
- PROPOSED WATER LINE

GRAPHIC SCALE
10 0 5 10 20
1 inch = 10 feet

Approval

Approved under authority of a resolution adopted _____ by the Planning Board of the City of Saratoga Springs.

_____ Chairperson

Date Signed _____

the LA group
Landscape Architecture and Engineering, PC
40 Long Alley
Saratoga Springs
New York 12866
P 518/587-8100
F 518/587-0180
www.thelagroup.com

Unauthorized alteration or addition to this document is a violation of Section 7209 of the New York State Education Law

© the LA Group 2008

Design MCB
Drawn MCB
Checked CMI

PREPARED FOR:
John-Paul Builders, LLC
796 Burdeck Street
Schenectady, NY 12306

246 WEST AVENUE APARTMENTS

SARATOGA SPRINGS, NY

Title SITE UTILITY PLAN

Revisions

City #:
Project: 201178
Date: 6/23/2016

Drawing L-4

Plotted By: MATT BROBSTON
Save Date: 6/22/2016 5:18 PM
File Name: C:\Projects\201178_West_Ave_246\2011178CAD\L-4_UTIL.dwg

Plotted By: MATT BROBSTON
Save Date: 6/22/2016 5:19 PM
File Name: G:\Proj-2011\201178_West_Ave_246\201178CAD\L-4-1_OFFSITE_UTIL.dwg

WATER SYSTEM NOTES

A. The location of underground utilities shown on this plan are for information only, and all utilities may not be shown. The Contractor shall contact U.F.P.O. (1-800-962-7962) and the proper local authorities or respective utility company having jurisdiction to field verify the location of all existing utilities before commencing work. Any costs incurred by the Contractor due to failure to contact the proper authorities shall become the responsibility of the Contractor.

B. Extend designated limit of work as necessary to accomplish site utility work as required by these Drawings and Specifications.

C. Water Service lines 4-inch and larger:

1. Pipe and Fittings
   a. Ductile Iron Pipe: Class 52, ANSI/AWWA C151/A21.51
   b. Mechanical Joint fittings: ANSI standard A21.10 and A21.11 (AWWA C110 and C111) Class 350.
2. Coatings
   a. Double cement mortar lining on interior and coal tar seal coat on interior and exterior in accordance with ANSI/AWWA C104/A21.11
3. Joints
   a. Conforming with ANSI/AWWA C111/A21.11
   b. Pipe – push on joint.
   c. fittings – mechanical joint, plain rubber gasket together with retainer glands having steel set screws.
4. Valve Boxes
   a. Cast iron two piece valve box as manufactured by Clow (Model F2454), or approved equal.
   b. Cover must be stay-put type (Clow Model F2490), or approved equal, and be clearly marked "Water."
5. Anchorage
   a. Concrete thrust blocks must be used at all changes in direction of 11 1/4° or greater, and at all tees, caps, fittings, hydrants and plugs.

D. Water service lines 2 1/2-inch and smaller (no line shall be smaller than 3/4-inch):

1. Pipe
   a. Copper water tube, type K, soft temper for underground service.
2. Corporation Stops
   a. Mueller H-15008 with AWWA inlet threads or approved equal.
   b. Valves 1 1/2-inch and larger must be used with tapping sleeve.
3. Curb-stop
   a. Mueller H-15209 or H-15219 curb-stops, non-draining or approved equal.
4. Couplings
   a. Mueller H-15403 110 compression connections or approved equal; three part union for copper-to-copper type connection.
5. Curb-box
   a. Mueller H-10314
   b. Extension type with arch pattern base or approved equal.
   c. Solid cover (Mueller or approved equal).
   d. Stationary rod.

E. Valves, Hydrants, etc.:

1. Valves – Mueller A-2380-20
   a. All valves under 12-inches in diameter shall be mechanical joint resilient wedge (R/W).
   b. R/W valves, 3-inches and larger, shall be iron body, non-rising stem conforming to AWWA C509. Gland bolts shall be zinc coated steel.
   c. All valves shall have a maximum working pressure rating of 200 psig.
   d. All valves shall have mechanical joint ends conforming to ANSI A21.10/A21.11
   e. Valves shall open right (clockwise) with a standard 2-inch square operating nut with arrow cast on it showing the direction of opening.
   f. Each valve shall be furnished complete with necessary nuts, bolts, studs and gaskets.
2. Butterfly Valves – Mueller Lineseal III
   a. With the exception of tapping valves, all valves 12-inches in diameter and larger shall be Mueller, or approved equal, butterfly valves.
   b. Butterfly valves, 12-inches and larger, shall be iron body, bronze mounted, 360-degree rubber seat with stainless steel shaft conforming to AWWA C504. gland bolts shall be zinc coated steel.
   c. All valves shall have a minimum working pressure rating of 200 psi.
   d. All valves shall have mechanical joint ends conforming to ANSI A21.10, A21.11.
   e. Valves shall open right (clockwise) with a standard 2-inch square operating nut with arrow cast on it showing the direction of opening.
   f. Valve shall operate using traveling nut.
   g. The valve dish shall hold at any position without fluttering or creeping.
   h. The valve shall be equipped with a mechanical stop to prevent overtravel.
   i. Each valve shall be furnished complete with necessary nuts, bolts, studs, and gaskets which conform to AWWA C-110, AWWA C-111.
3. Fire Hydrants shall be Mueller A-423 compression-type hydrant, or approved equal having the following features
   a. 5 1/4-inch valve opening with a 6-inch inlet.
   b. Two (2) 2 1/2-inch hose nozzle and one (1) 4" Storz pumper nozzle; national standard thread.
   c. Operating nut shall be national standard, pentagon shaped, 1/8-inch point to flat.
   d. Break flange – traffic type construction
   e. Open right (clockwise)
   f. Hydrants are to be painted a minimum of one (1) coat primer and one (1) finish coat of industrial enamel as per paint schedule.

F. Water mains and services shall be installed at a minimum cover depth below finished grade of 5'-0".

G. Chlorination, pressure and leakage tests of water mains shall be in conformance with the specifications, NYSDOH regulations, and AWWA Standards and shall be performed under the supervision of the Owner's Representative and City Engineer. Bacteria examination after disinfection at a NYSDOH approved laboratory will take place prior to turning water main over to the Owner.

H. Water valve boxes, existing structure rims, new structure rims, etc., shall be adjusted to conform to new finished pavement grades unless otherwise noted and/or directed by Owner's Representative.

1 WATER AND STORM DRAIN CROSSING DETAIL
SCALE: NTS

SEWER SYSTEM NOTES

1. Installation of polyvinyl chloride plastic (PVC) sewer pipe shall be in accordance with manufacturer's installation recommendations, and in accordance with ASTM D 2321.
2. Manhole frames and covers shall be Campbell Foundry Co. pattern No. 1203B or approved equal. The cover shall be embossed with "City of Saratoga Springs Sanitary Sewer". Provide (4) 7/8" dia. vent holes in cover.
3. Sanitary sewer manholes shall be precast reinforced concrete, complying with ASTM C 478. Base section to be pre-cast with integral floor. Top section shall be precast eccentric cone or flat slab traffic top as required. Steps of copolymer polypropylene integrally cast into the manhole sidewalls. Pipe to manhole connection shall be "Press-Wedge II" seal, or approved equivalent.
4. All sewer piping and fittings shall conform to the Standard Specifications for PVC pipe, ASTM designation D-3034-78 or latest revision and to the dimensions and tolerances of classification SDR-26 with single gasket push-on joints.
5. Product data information and shop Drawings for materials proposed for use by the contractor shall be submitted to and approved by the Architect prior to the placement of any orders for said materials. Copy City engineer on shop drawings/ submittals
6. Leakage outward or inward shall not exceed 200 gallons per inch of pipe diameter per mile per day for any section of the system. Leakage test shall be performed with a minimum positive head of 2 feet.

NOTES PER SARATOGA COUNTY SEWER DISTRICT

1. SDR 26 PIPE WITH SDR 26/35 FITTINGS WILL BE USED FOR SERVICE LATERALS.
2. THE CONTRACTOR WILL CONTACT SCSD (518)664-7396 AT LEAST 48 HOURS BEFORE CONSTRUCTION BEGINS.
3. THE CONTRACTOR SHALL FIELD VERIFY AND CONFIRM GRADES OF EXISTING MANHOLES BEFORE CONSTRUCTION BEGINS.
4. NO DISCHARGE OF FLOWS WILL BE ALLOWED UNTIL FINAL APPROVAL OF THE PROJECT HAS BEEN GRANTED.

Approval
Approved under authority of a resolution adopted by the Planning Board of the City of Saratoga Springs.
Chairperson
Date Signed ______

the LA group
Landscape Architecture and Engineering, PC
40 Long Alley
Saratoga Springs
New York 12866
P 518/587-8100
F 518/587-0180
www.thelagroup.com

Unauthorized alteration or addition to this document is a violation of Section 7209 of the New York State Education Law

© the LA Group 2008

Design MCB
Drawn MCB
Checked CMI

PREPARED FOR:
John-Paul Builders, LLC
796 Burdeck Street
Schenectady, NY 12306

246 WEST AVENUE APARTMENTS
SARATOGA SPRINGS, NY

Title
OFF-SITE WATERLINE CONNECTION

Revisions

City #:
Project: 201178
Date: 6/23/2016
Drawing
L-4.1

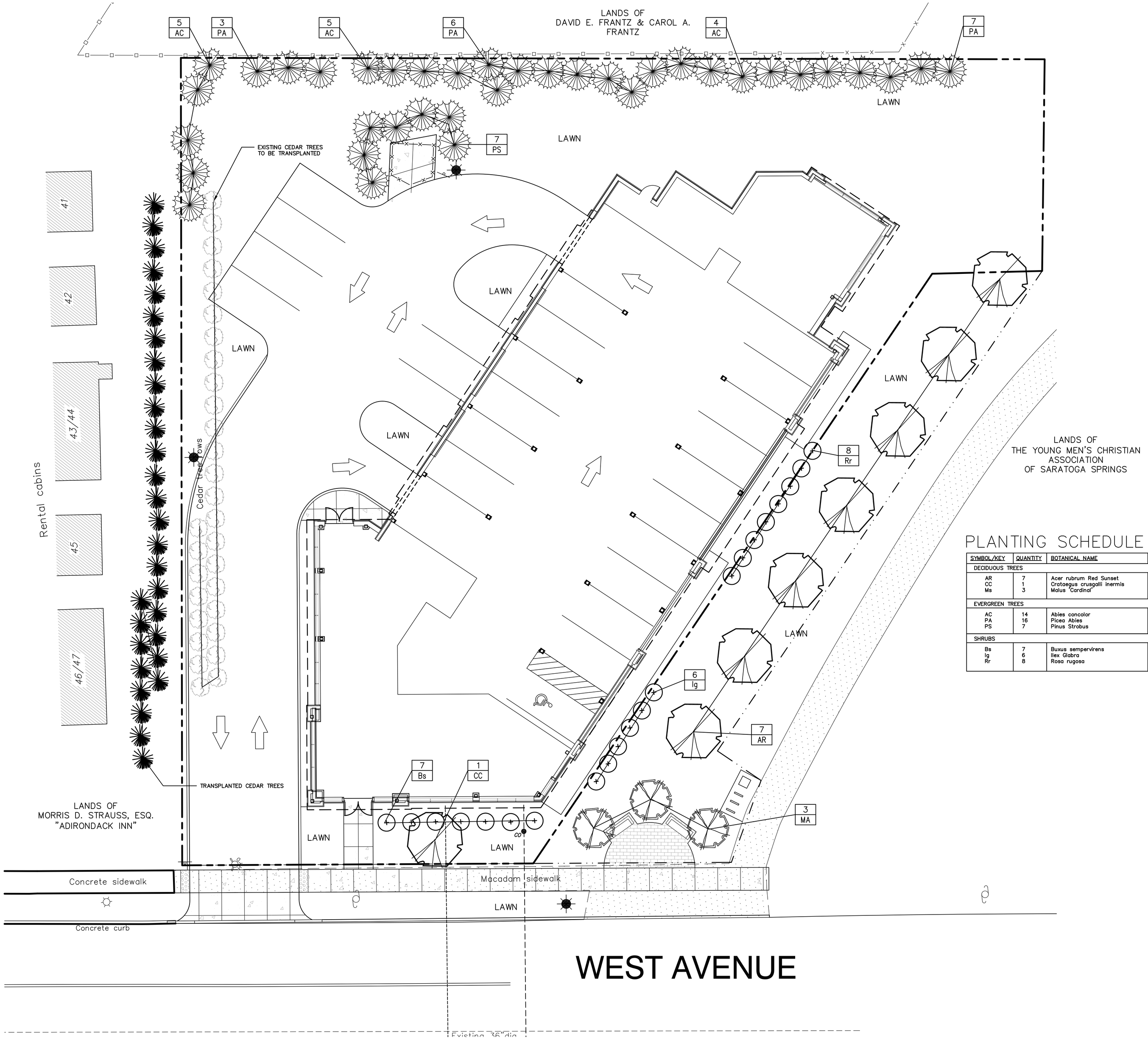

PLANTING NOTES

1. All new plant material shall conform to the minimum guidelines established by the American Standard for Nursery Stock Published by the American Association of Nurserymen, Inc.
2. All new plants to be balled and burlapped or container-grown unless otherwise noted on plant list.
3. Any proposed substitutions of plant species shall be made with plants of equivalent overall form, height, branching habit, flower, leaf, color, fruit and culture, and only as approved by the Owner's Representative.
4. All new plant material for the project shall be of specimen quality unless approved otherwise by Owner's Representative.
5. Where plants size is indicated as a range, the plants provided shall be a fair representation of that range.
6. The Contractor shall supply all new plant material in quantities sufficient to complete the planting shown on the Drawings.
7. Contractor shall obtain plant approval from Owner's Representative after delivery and prior to installation.
8. Lawn Mix:

% BY WEIGHT	SPECIES%	GERMINATION
30%	Tall Fescues	90%
20%	Hybrid Kentucky Blue	87%
50%	Turf-Type Perennial Rye	90%

9. Contractor shall locate and verify all existing utility lines prior to planting and shall report any conflicts to the Owner's Representative.
10. Stake location of all proposed planting for approval by the Owner's Representative prior to the commencement of planting.
11. New plant material shall bear same relationship to finished grade as it bore to previous grade in the nursery.
12. All plant beds to receive three inches (3") of bark mulch on weed barrier fabric or as per Specifications.
13. Prepare all planting beds to minimum overall depths shown on planting details.
14. Amended topsoil backfill shall consist of (1) part manure to (8) parts topsoil and bonemeal @ 20 lbs. to 4 cu. yds. topsoil.
15. All disturbed areas not scheduled for other work shall receive four inches (4") of suitable on-site or imported planting soil prior to seeding or sodding as specified.
16. Contractor shall guarantee all planted materials a minimum of 1 year time.
17. Contractor shall maintain all work including watering, mowing, and protection from traffic until final acceptance of the project.
18. Contractor is responsible to repair or replace all items damaged outside construction limits or disturbed on site which are not part of the identified work of this Contract.
19. Contractor to provide and maintain erosion control measures as shown on the plans and as required in the field. Remove upon stabilization of ground cover.

PLANTING SCHEDULE

SYMBOL/KEY	QUANTITY	BOTANICAL NAME	COMMON NAME	SIZE	ROOT	COMMENTS
DECIDUOUS TREES						
AR	7	Acer rubrum Red Sunset	Red Sunset Red Maple	2 1/2 – 3" cal	B & B	
CC	1	Crataegus crusgalli inermis	Thornless cockspur hawthorn	2 1/2 – 3" cal	B & B	Used small tree from zoning because of overhead wires
Ms	3	Malus 'Cardinal'	Cardinal Crabapple	2 1/2 – 3" cal	B & B	
EVERGREEN TREES						
AC	14	Abies concolor	White Fir	6 – 7' ht	B & B	
PA	16	Picea Abies	Norway Spruce	6 – 7' ht	B & B	
PS	7	Pinus Strobus	White Pine	6 – 7' ht	B & B	
SHRUBS						
Bs	7	Buxus sempervirens	Common Boxwood	30 – 36"	B & B	
Ig	6	Ilex Glabra	Inkberry	18 – 24"	C.G.	
Rr	8	Rosa rugosa	Rose bush	24 – 30"	C.G.	

GRAPHIC SCALE

10 0 5 10 20

1 inch = 10 feet

Approval

Approved under authority of a resolution adopted by the Planning Board of the City of Saratoga Springs.

Chairperson

Date Signed

the LA group
Landscape Architecture and Engineering, PC
40 Long Alley
Saratoga Springs
New York 12866
P 518/587-8100
F 518/587-0180
www.thelagroup.com

Unauthorized alteration or addition to this document is a violation of Section 7209 of the New York State Education Law

© the LA Group 2008

Design MCB
Drawn MCB
Checked CMI

PREPARED FOR:
John-Paul Builders, LLC
796 Burdeck Street
Schenectady, NY 12306

246 WEST AVENUE APARTMENTS

SARATOGA SPRINGS, NY

Title
SITE LANDSCAPE PLAN

Revisions

City #:
Project: 201178
Date: 6/23/2016

Drawing
L-5

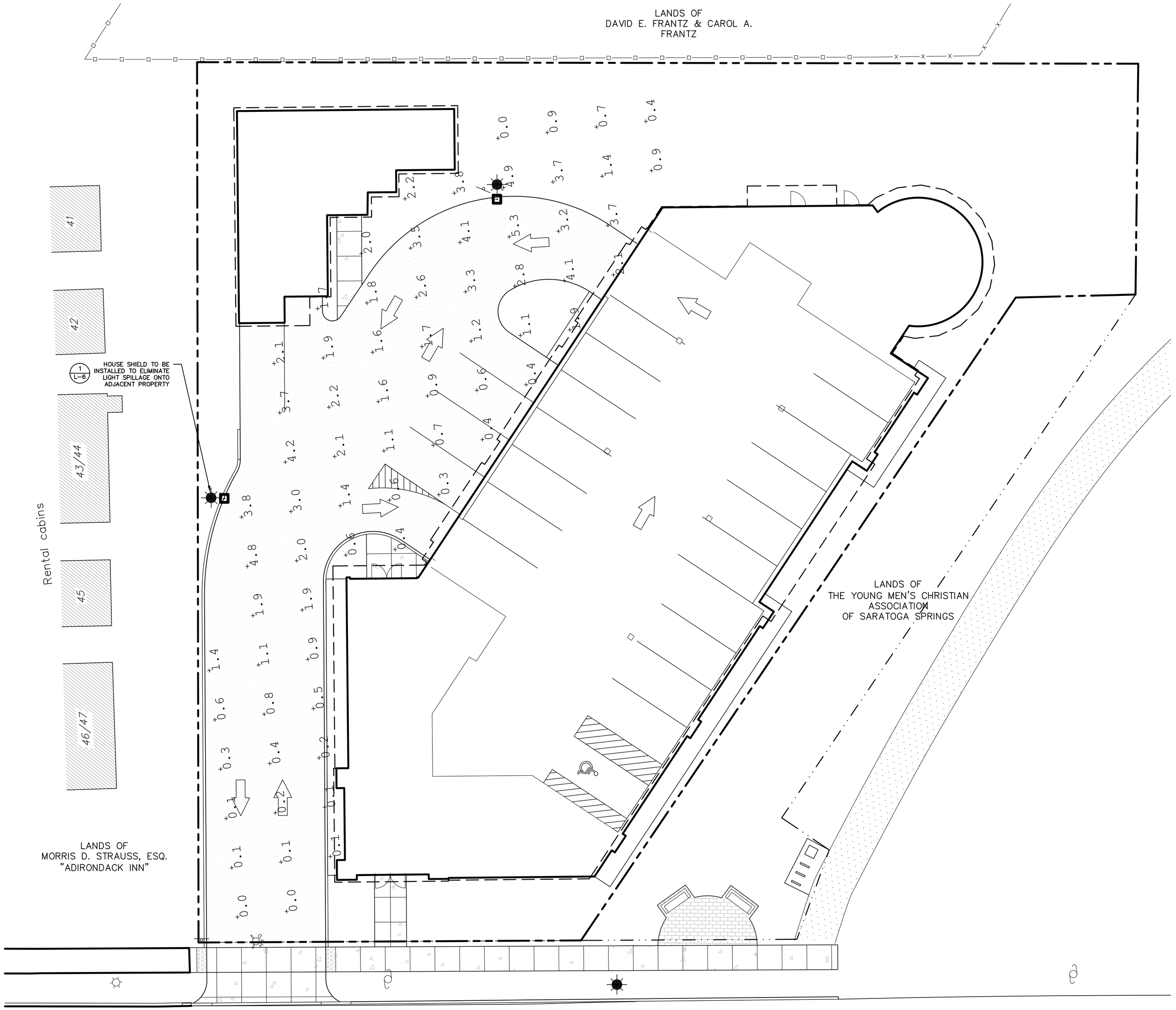

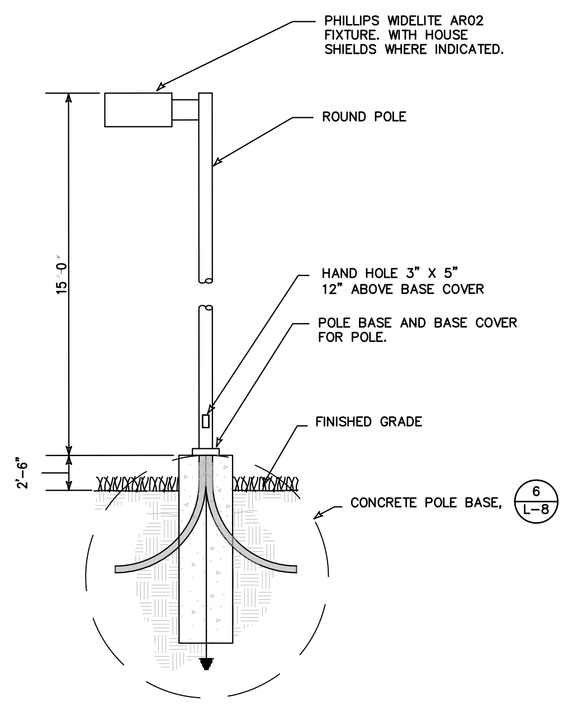

1 PARKING LOT LIGHT POLE DETAIL

SCALE: NTS

WEST AVENUE

Luminaire Schedule						
Symbol	Qty	Label	Arrangement	Total Lamp Lumens	LLF	Description
	2	AR02	SINGLE	13000	0.880	AR02-150H Type 2

GRAPHIC SCALE

10 0 5 10 20

1 inch = 10 feet

Approval

Approved under authority of a resolution adopted _____ by the Planning Board of the City of Saratoga Springs.

_____ Chairperson

Date Signed _____

the LA group
Landscape Architecture and Engineering, PC
40 Long Alley
Saratoga Springs
New York 12866
P 518/587-8100
F 518/587-0180
www.thelagroup.com

Unauthorized alteration or addition to this document is a violation of Section 7209 of the New York State Education Law

© the LA Group 2008

Design MCB
Drawn MCB
Checked CMI

PREPARED FOR:
The PIKE Company, INC.
210 Clifton Corporate Parkway
Clifton Park, NY 12065

246 WEST AVENUE
RESIDENTIAL CONDOMINIUM COMPLEX
SARATOGA SPRINGS, NY

Title
SITE LIGHTING PLAN

Revisions
MYLAR CHECK SET 9/28/2012
MYLAR SET NOVEMBER 2012
May 2014

City #: 12.006.1
Project: 201178
Date: 1/25/2012

Drawing
L-6

Plotted By: MATT BROBSTON
Save Date: 01/16/2013 4:31 PM
File Name: G:\Projects\201178_West_Ave_246\2011178CAD\L-6_LIGHT.dwg

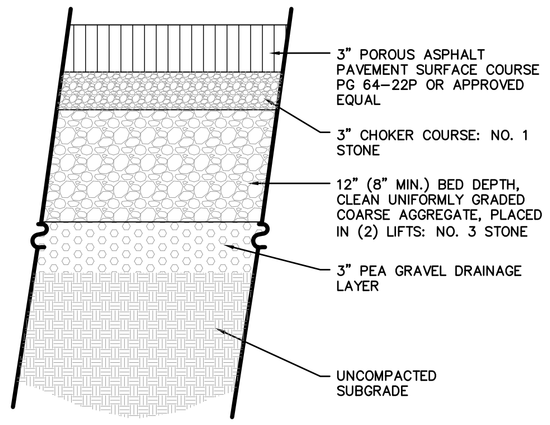

1 POROUS PAVEMENT

N.T.S.

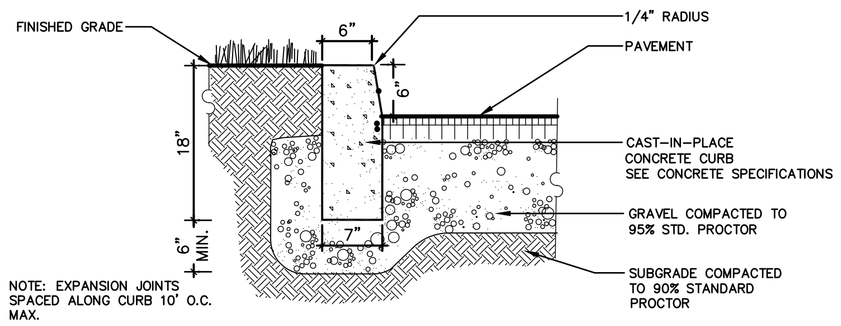

NOTE: EXPANSION JOINTS SPACED ALONG CURB 10' O.C. MAX.

2 CONCRETE CURB DETAIL

N.T.S.

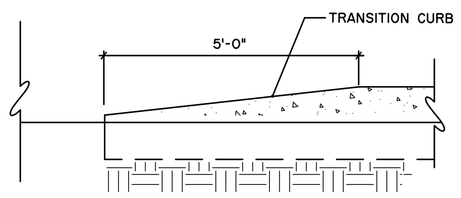

SECTION

3 CURB END TRANSITION DETAIL

N.T.S.

CITY OF SARATOGA SPRINGS

CONCRETE SPECIFICATIONS

THESE GENERAL CONCRETE SPECIFICATIONS SHALL APPLY TO ALL CONCRETE WORK WITHIN THE CITY OF SARATOGA SPRINGS INSTALLED WITHIN A CITY RIGHT-OF-WAY AND/OR WITHIN THE APPROVAL AUTHORITY OF THE PLANNING BOARD.

ALL CONCRETE THAT MAY COME IN CONTACT WITH DEICING CHEMICALS SHALL MEET OR EXCEED THESE MINIMUM SPECIFICATIONS.

CONCRETE SHALL BE ONLY PORTLAND CEMENT CONCRETE AIR-ENTRAINED OF DURABLE MATERIALS AND SHALL HAVE (1) A LOW WATER-CEMENT RATIO (MAXIMUM 0.46), (2) A SLUMP OF 4 INCHES OR LESS.* (3) A CEMENT CONTENT OF 606 LB PER CUBIC YARD OR MORE, (4) PROPER FINISHING AFTER BLEED WATER HAS EVAPORATED FROM THE SURFACE, (5) ADEQUATE DRAINAGE WITH A SLOPE OF 1/8 INCH PER LINEAR FOOT OR MORE, (6) A MINIMUM OF 7 DAYS MOIST CURING AT OR ABOVE 50 DEGREES F, (7) A MINIMUM COMPRESSIVE STRENGTH OF 4000 PSI AT 28 DAYS, AND (8) A MINIMUM 30-DAY DRYING PERIOD AFTER MOIST CURING IF CONCRETE IS PLACED IN THE FALL AND WILL BE EXPOSED TO FREEZE-THAW CYCLES AND DEICERS WHEN SATURATED. THE EXACT LENGTH OF TIME FOR SUFFICIENT DRYING TO TAKE PLACE MAY VARY WITH CLIMATE AND WEATHER CONDITIONS.

TECHNICAL SPECIFICATIONS FOR CONCRETE AS HEREIN DEFINED SHALL COMPLY WITH THE APPLICABLE SPECIFICATIONS OF THE "NEW YORK STATE DEPARTMENT OF TRANSPORTATION STANDARD SPECIFICATIONS CONSTRUCTION AND MATERIALS", 1985.

ANY CLARIFICATION, REVISIONS, MODIFICATIONS THERETO SHALL ONLY BE MADE SUBJECT TO APPROVAL OF THE CITY OF SARATOGA SPRINGS PLANNING BOARD.

*A SUPER PLASTICIZER MAY BE USED TO INCREASE SLUMP AND WORKABILITY WITHOUT INCREASING THE WATER-CEMENT RATIO.

4 CONCRETE SPECIFICATIONS

N.T.S.

Plotted By: MATT BRIDSTON
Save Date: 11/16/2012 5:11:11 PM
File Name: G:\Projects\201178_West_Ave_246\2011\TRCAD\L7_DETS.dwg

NOTES:

EXPANSION JOINT SPACING – 20'-25' O.C.
CONTROL JOINT SPACING – 5' O.C.
NOMINAL CROSS SLOPE – 1/8" TO 1/4" PER FOOT (MAX. SLOPE 1:50 TYP.) TOWARDS STREET OR A.O.B.E. MAX. SLOPE ALONG THE LENGTH OF

THE WALK SHOULD NOT EXCEED 1:12
CONSTRUCTION JOINT DETAILS TO BE SUBMITTED AND APPROVED BY CITY ENGINEER SIDEWALK WIDTH TO BE 5' MIN. OR AS ORDERED BY CITY ENGINEER

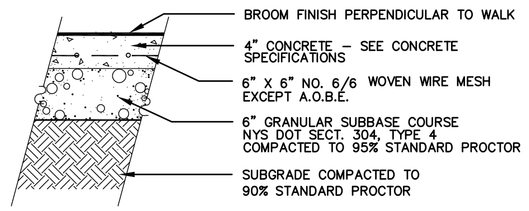

TYPICAL PEDESTRIAN LOADING

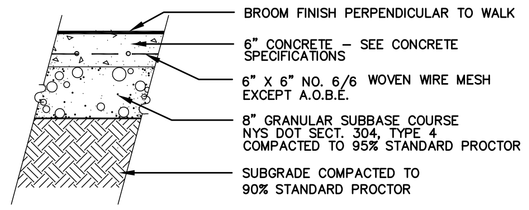

VEHICLE TRAFFIC LOADING

GENERAL DESIGN CRITERIA FOR CONSTRUCTING SIDEWALKS WITHIN SARATOGA SPRINGS RIGHT OF WAYS:

1.) SIDEWALKS MUST BE PLACED IN THE PUBLIC RIGHT OF WAY AT THE PROPERTY LINE.
2.) SIDEWALKS MUST NOT DROP DOWN WHEN CROSSING A DRIVEWAY.
3.) SIDEWALKS MUST NOT EXTEND ACROSS PUBLIC STREETS OR ALLEYS.

GENERAL DESIGN CRITERIA FOR CONSTRUCTING SIDEWALKS WITHIN SARATOGA COUNTY RIGHT OF WAYS WITHIN SARATOGA SPRINGS:

1.) ALL SIDEWALK INSTALLATIONS MUST BE DESIGNED BY A PROFESSIONAL ENGINEER. PLANS MUST BE APPROVED BY THE COUNTY COMM. OF PUBLIC WORKS.
2.) SIDEWALKS MUST BE PLACED ON THE BACK SIDE OF DITCHES OR 8'(MIN.) FROM THE EDGE OF SHOULDER.
3.) SIDEWALKS MUST BE CONSTRUCTED SO AS NOT TO INTERFERE WITH DRAINAGE.

5 CONCRETE PAVEMENT DETAIL

N.T.S.

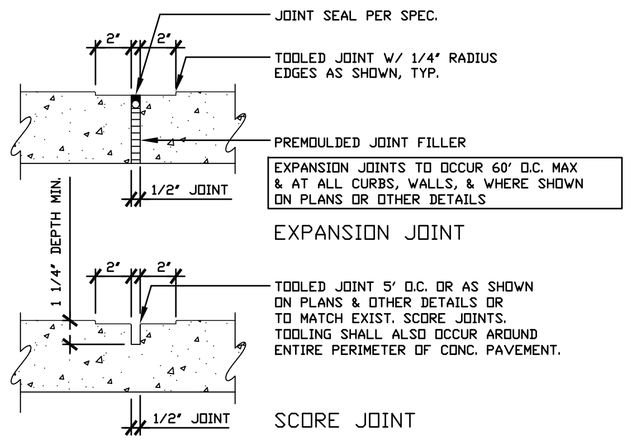

6 CONCRETE PVMT. EXPANSION SCORE JOINT DETAIL

N.T.S.

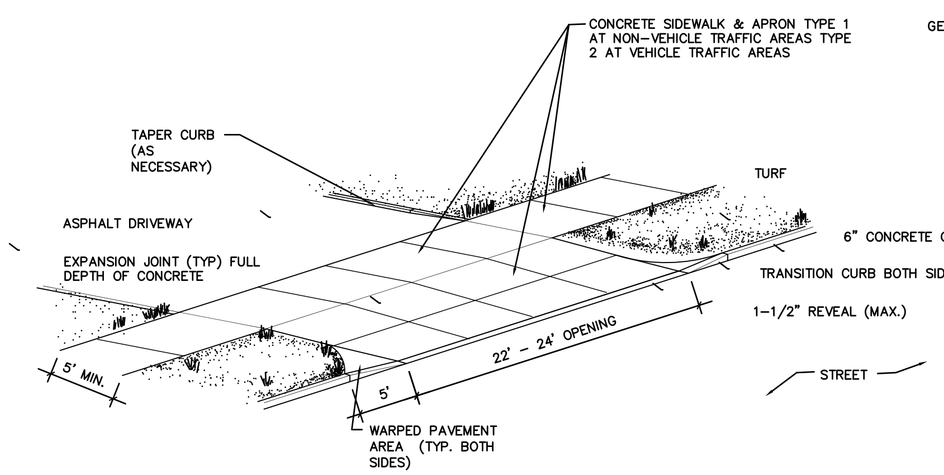

7 COMMERCIAL ENTRANCE DETAIL

N.T.S.

	TEXT	LETTER SIZE	LETTER TYPE	APPROX. SIZE OF SIGN	M.U.T.C.D. NO.
A	STOP	SEE M.U.T.C.D.		30"x30" 6.25 S.F.	R1-1C

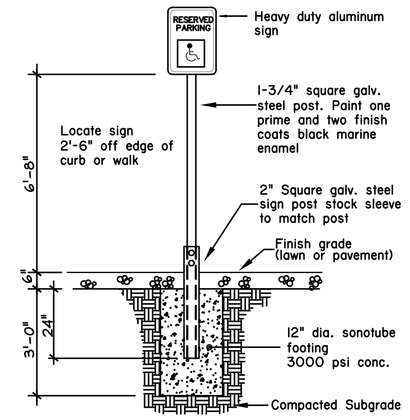

NOTE: OWNER TO APPROVE LOCATIONS PRIOR TO INSTALLATION.

SCHEDULE ELEVATION

8 TRAFFIC SIGN DETAIL / SIGN SCHEDULE

N.T.S.

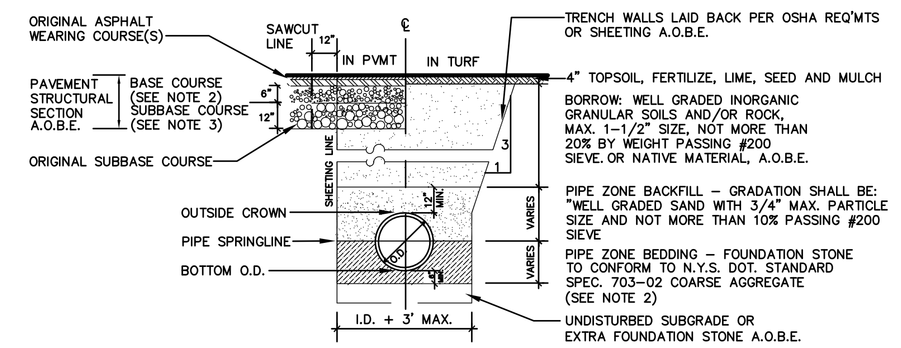

NOTES:

1. STREET OPENING PERMIT IS REQUIRED
2. FOUNDATION STONE – N.Y.S. DOT STD. SPEC. 703-02

   SIZE DETERMINATION #1: 100% PASSING 1" SIEVE, 90-100% PASSING 1/2" SIEVE, 0-15% PASSING 1/4" SIEVE

   OR

   SIZE DETERMINATION #2: 100% PASSING 1-1/2" SIEVE, 90-100% PASSING 1" SIEVE, 0-15% PASSING 1/2" SIEVE.

   GRADATION/SIZE DESIGNATION TO BE DETERMINED BY ENGINEER BASED ON FIELD CONDITIONS.

2. BASE COURSE FOR PAVEMENT: CONFORM TO N.Y.S. DOT STD. 703-02 WITH FOLLOWING MODIFICATIONS:

   2-1/2" SIEVE – PASS 100% BY WEIGHT
   1-3/4" SIEVE – PASS 95-100% BY WEIGHT
   3/4" SIEVE – PASS 60-75%
   1/4" SIEVE – PASS 25-45%
   #40 SIEVE – PASS 10-25%
   #100 SIEVE – PASS 3-12%

3. SUBBASE COURSE FOR PAVEMENT: CONFORM TO N.Y.S. DOT STD. 304-2, TYPE 4.
4. STRUCTURAL PAVEMENT SECTION SHOWN SHALL BE CONSTRUCTED IN LIEU OF PAVEMENT SECTION SHOWN ON DRAWING NO. P-4 A.O.B.E.

9 SANITARY PIPE TRENCH DETAIL

N.T.S.

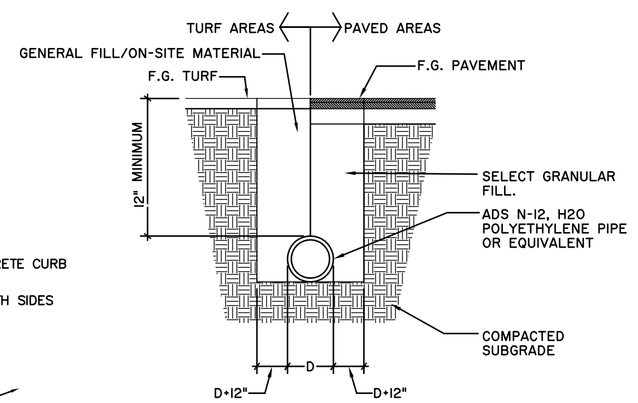

NOTE:
1. ADS N-12, HDPE PIPE REQUIRES A MINIMUM COVER OF 12" IN TRAFFIC AREAS AS PER MANUFACTURER'S SPECIFICATIONS. TO MEET AASHTO H-20 LOAD RATING.

10 PIPE TRENCH (STORM SYSTEM)

N.T.S.

Armor-Tile

Tactile Systems

ENGINEERED PLASTICS, INC.
300 INTERNATIONAL DR., SUITE 100
WILLIAMSVILLE, NY
USA, 14221
1 (800) 682-2525
PHONE: (716) 626-3626
FAX: 1 (800) 769-4463
www.armor-tile.com

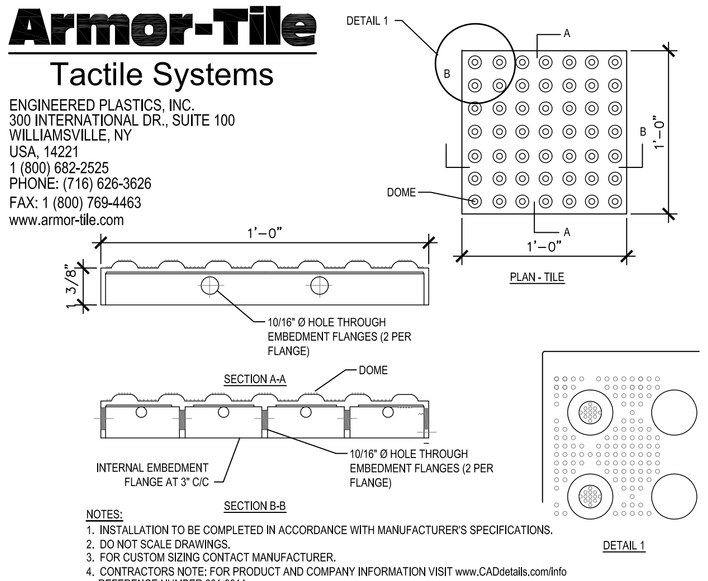

11 TACTILE WARNING STRIP

N.T.S.

12 UNIT PAVER WALKS

N.T.S.

Approval

Approved under authority of a resolution adopted _____ by the Planning Board of the City of Saratoga Springs.

_____ Chairperson

Date Signed _____

the LA group
Landscape Architecture and Engineering, PC
40 Long Alley
Saratoga Springs
New York 12866
P 518/587-8100
F 518/587-0180
www.thelagroup.com

Unauthorized alteration or addition to this document is a violation of Section 7209 of the New York State Education Law

© the LA Group 2008

Design MCB
Drawn MCB
Checked CMI

PREPARED FOR:
The PIKE Company, INC.
210 Clifton Corporate Parkway
Clifton Park, NY 12065

246 WEST AVENUE
RESIDENTIAL CONDOMINIUM COMPLEX
SARATOGA SPRINGS, NY

Title SITE DETAILS

Revisions
MYLAR CHECK SET 9/28/2012
MYLAR SET NOVEMBER 2012
May 2014

City #: 12.006.1
Project: 201178
Date: 1/25/2012

Drawing L-7

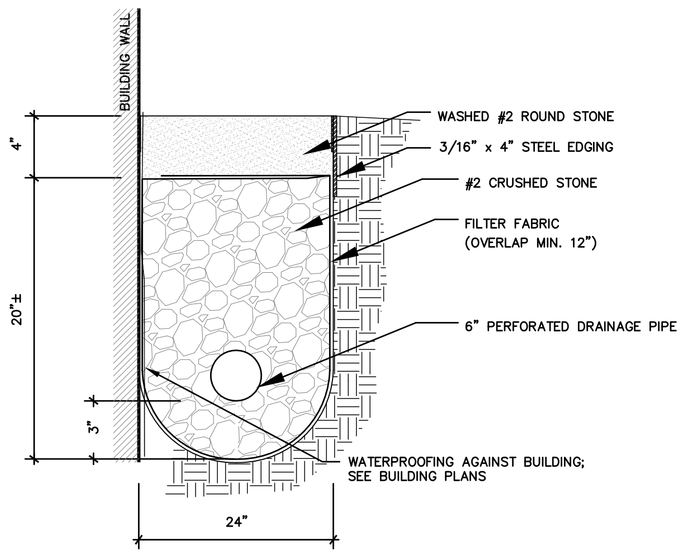

1 PERFORATED DRAINAGE TRENCH DETAIL

N.T.S.

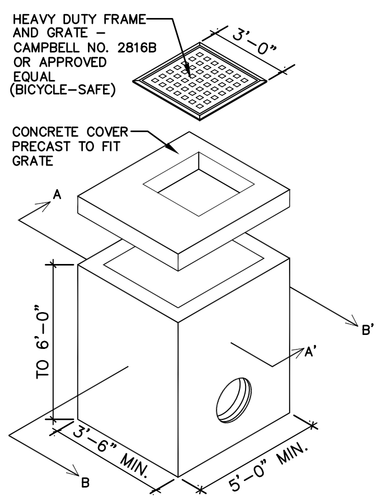

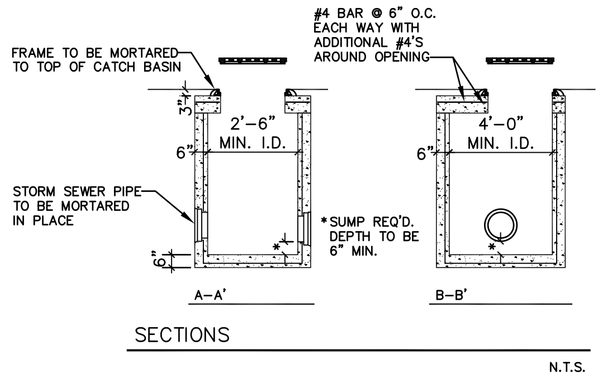

SECTIONS

N.T.S.

CONCRETE – 4000 PSI @ 28 DAYS
MIN. REINFORCMENT – 6x6 – 10/10 WWM
ALL FOUR SIDES AND BOTTOM
(CONFORM TO ASTM STD. A–615)

2 CATCH BASIN DETAIL

N.T.S.

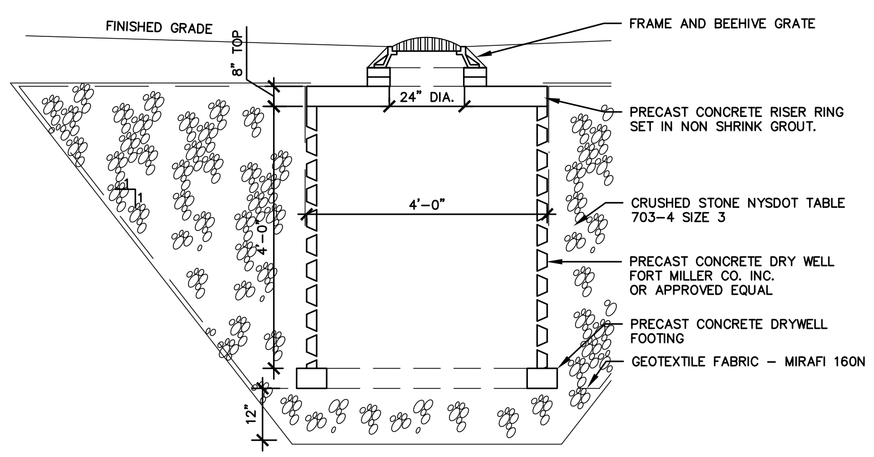

3 DRYWELL DETAIL

N.T.S.

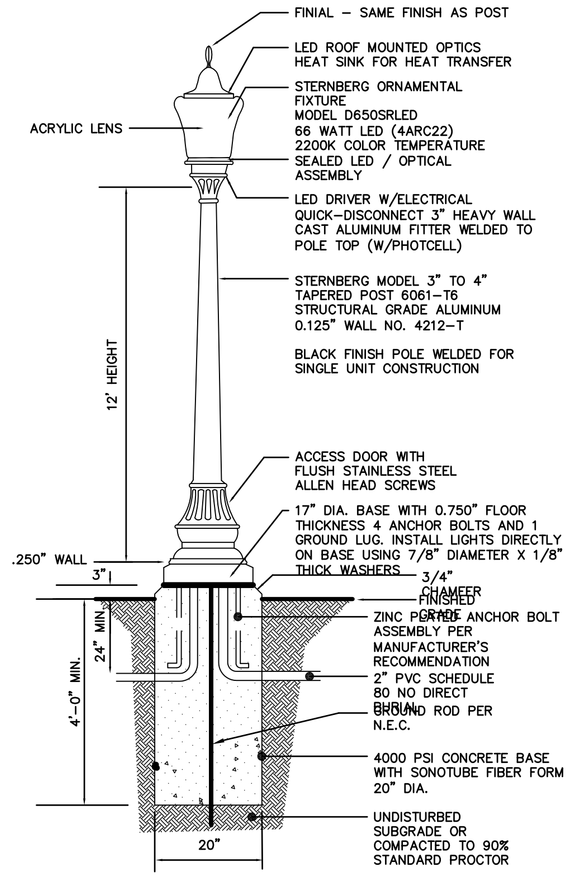

NOTES:

1. INSTALLATION OF DECORATIVE LIGHTS SHALL BE COORDINATED WITH THE CITY ELECTRICIAN AND DEPARTMENT OF PUBLIC WORKS. (USE 120V POWER)
2. THE OWNER/DEVELOPER IS RESPONSIBLE FOR ELECTRIFYING THE SYSTEM AND PAYING THE ELECTRIC BILLS UNTIL ACCEPTED AND TAKEN OVER BY THE CITY OF SARATOGA SPRINGS.
3. ELECTRIC SERVICE: SWEEPS AT CONCRETE BASES AND BETWEEN BASES USE 2" SCHEDULE 40 PVC NON–METALLIC CONDUIT, UNLESS UNDER DRIVEWAYS WHERE SCHEDULE 80 PVC IS REQUIRED. FOR WIRE: THHN COPPER STRANDED NUMBER 6 COLORED RED, WHITE, AND GREEN. LIGHTS ARE WIRED 120 VOLTS. PROVIDE A SEPARATE HANDHOLD, SYNERTECH SYN12121212HH02, TO BE OWNED BY THE CITY FOR THE DISCONNECT NEAR THE BASE OF THE ELECTRIC POLE OR BOX AT THE BEGINNING OF SERVICE. PROVIDE AND INSTALL (1) 5/8 INCH COPPER GROUND ROD IN HANDHOLE. WIRE AND CONDUIT FROM HANDHOLE TO POLE OR BOX PER NATIONAL GRIDS'S STANDARDS. IF CONNECTING ONLY ONE LIGHT PROVIDE WATERTIGHT FUSEHOLDER, FERRAZ SHAWMUT FEB–21–21 1P 600V WITH 5 AMP FUSE WITH INSULATOR BOOTS PART FRZ FSB1 IN HANDHOLE FOR FUSING THE POWER WIRE. IF CONNECTING MORE THAN ONE LIGHT PUT A 30 AMP FUSE IN WATERTIGHT FUSEHOLDER IN HANDHOLD AND PROVIDE SEPARATATE FUSE HOLDERS, BUSSMAN HEB–AA FUSEHOLDER WITH 5 AMP FUSE, IN BASE OF EACH LAMP. RUN #12 THHN COPPER, (RED WHITE AND GREEN) FROM BASE TO TOP OF LIGHT USE POLARIS CONNECTORS FOR CONNECTIONS IN HANDHOLE AND IN BASE OF LIGHTS. THE LIGHT IS TO BE MOUNTED DIRECTLY ONTO CONCRETE BASE USING FENDER WASHERS. 2 INCH OD 1/2 INCH ID AND 1/8 INCH THICKNESS AND LOCK WASHERS

4 DECORATIVE STREET LIGHT DETAIL

N.T.S.

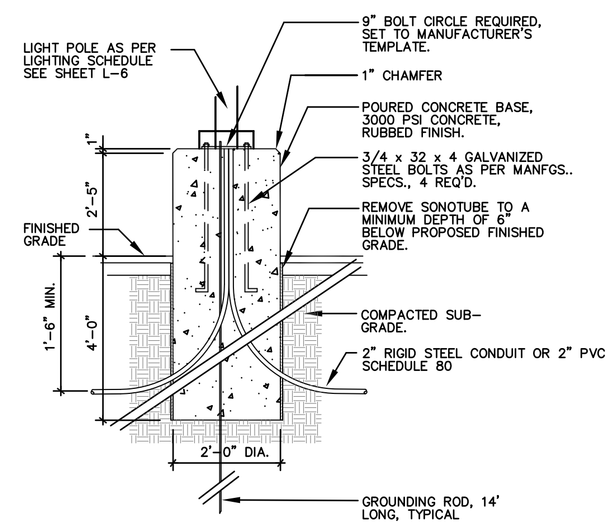

6 LIGHT POLE BASE – PEDESTAL DETAIL

N.T.S.

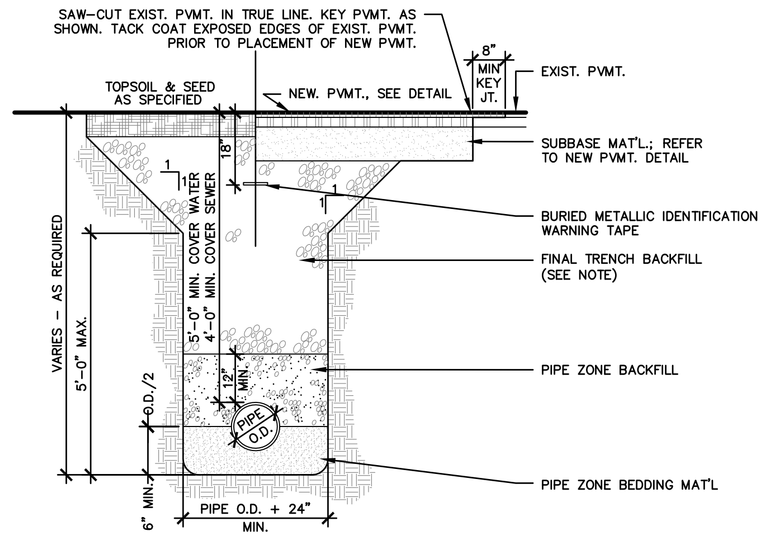

ITEM	DEPTH	MATERIAL	NYSDOT TYPE	METHOD OF PLACEMENT
PIPE ZONE BEDDING	6" MIN.	ANGULAR CRUSHED STONE	1&2	MECHANICAL COMPACTION
PIPE ZONE BACKFILL	12" MIN. COVER	CLEAN SAND OR GRAVEL	1A OR 1	MECHANICAL COMPACTION
FINAL TRENCH BACKFILL	VARIES	SEE NOTE	SEE NOTE	MECHNANICAL COMPACTION

NOTES:
1. FINAL TRENCH BACKFILL
   1.a. IN NON–PAVED AREAS, FINAL TRENCH BACKFILL SHALL BE EXCAVATED MATERIAL WHEN DETERMINED SUITABLE BY THE ENGINEER OF RECORD; OTHERWISE IT SHALL BE NYSDOT TYPE 1 (ITEM NO. 304.02). MIN. MOD. PROCTOR DENSITY SHALL BE 85 PERCENT.
   1.b. IN PAVED AREAS, FINAL TRENCH BACKFILL SHALL BE NYSDOT TYPE 1 (ITEM NO. 304.02). MIN. MODIFIED PROCTOR DENSITY SHALL BE 95 PERCENT.
2. ALL PIPE ZONE BEDDING, PIPE ZONE BACKFILL, AND FINAL TRENCH BACKFILL SHALL BE PLACED IN 6 INCH MAX. COMPACTED LIFTS. ALL BEDDING AND BACKFILL MATERIALS SHALL BE MECHANICALLY COMPACTED TO THE SATISFACTION OF THE ENGINEER.
3. EXCAVATION SHALL BE KEPT DRY AND DEWATERED AT ALL TIMES.

7 PIPE TRENCH-SECTION

SCALE: NTS

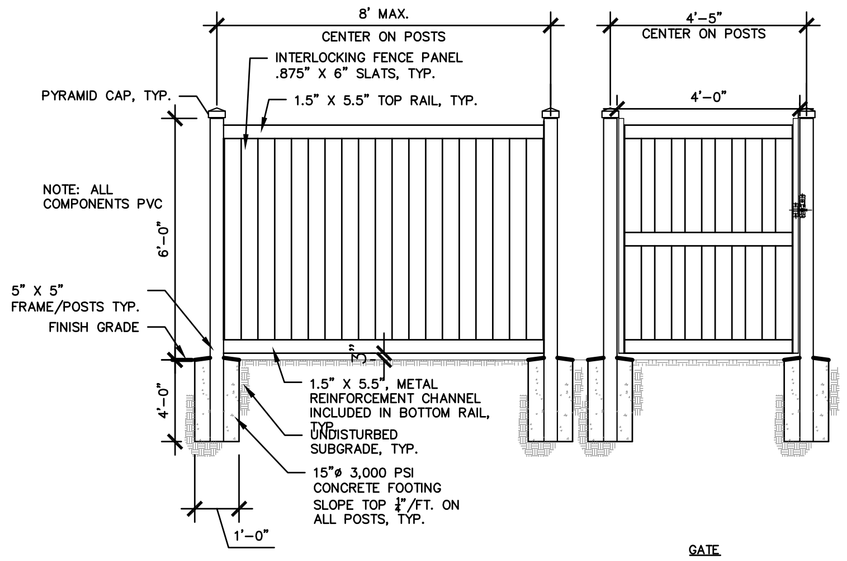

8 DUMPSTER PAD ENCLOSURE

SCALE: NTS

Approval

Approved under authority of a resolution adopted
by the Planning Board of the City of Saratoga Springs.

Chairperson

Date Signed

the LA group
Landscape Architecture
and Engineering, PC
40 Long Alley
Saratoga Springs
New York 12866
P 518/587-8100
F 518/587-0180
www.thelagroup.com

Unauthorized alteration or addition to this document is a violation of Section 7209 of the New York State Education Law

© the LA Group 2008

Design MCB
Drawn MCB
Checked CMI

PREPARED FOR:
John-Paul Builders, LLC
796 Burdeck Street
Schenectady, NY 12306

246 WEST AVENUE APARTMENTS

SARATOGA SPRINGS, NY

Title SITE DETAILS

Revisions

City #:
Project: 201178
Date: 6/23/2016

Drawing L-8

Plotted By: MATT BRIDBSTON
Save Date: 6/23/2016 10:10 AM
File Name: G:\Projects\1501\15_West_Ave_246\2015TRCADs\J-7_DETS.dwg

Plotted By: MATT BROBSTON
Save Date: 11/16/2012 5:11 PM
File Name: G:\Proj-2011\201178_West_Ave_246\201178CAD\L-7_DETS.dwg

NOTES:

MAINS SHALL BE VALVED TO INSURE THAT WATER FLOW IS NOT INTERRUPTED TO MORE THAN TWO HYDRANTS AT ANY GIVEN TIME.

ALL HYDRANTS AND VALVES SHALL OPEN RIGHT.

PAINT SCHEDULE:

SIZE OF MAIN	COLOR OF BONNET AND CONNECTOR COVERS	COLOR OF BARREL
6"	BLUE	YELLOW
8"	GREEN, FOREST	YELLOW
10"	BROWN	YELLOW
12"	GRAY, BATTLESHIP	YELLOW
14"	GREEN, LIGHT	YELLOW
16"	ORANGE	YELLOW
20"	BLACK	YELLOW
24"	YELLOW	YELLOW

1 FIRE HYDRANT DETAIL

N.T.S.

NOTE:
RETAINING GLANDS ACCEPTABLE FOR USE AS APPROVED BY CITY ENGINEER.

NOTES:
1. FOR REQUIRED BEARING AREA AND DIMENSIONS L & D, SEE SCHEDULE BELOW. VALUES OF L & D OTHER THAN THOSE SHOWN IN THE TABLE MAY BE USED PROVIDED THEY YIELD A BEARING AREA EQUAL TO OR LARGER THAN REQUIRED.
2. CONC. NOT TO OVERLAP ANY JOINT.
3. CONCRETE TO BE PLACED SO AS NOT TO INTERFERE W/ REMOVING OR INSTALLING ANY OF THE JOINTING HARDWARE.
4. BEARING AREAS FOR THRUST BLOCKS FOR WATER MAINS LARGER THAN 12" DIA. TO BE APPROVED BY CITY ENGINEER.
5. APPROXIMATE VOLUME OF CONCRETE THRUST BLOCK:

$$V\pm = \frac{LD\,(W + I.D.) - I.D.}{81}$$

WHERE:
V = VOLUME IN CUBIC YARDS
L = LENGTH OF BLOCK IN FEET
D = DEPTH OF BLOCK IN FEET
W = WIDTH OF BLOCK IN FEET
I.D. = INSIDE DIAMETER OF PIPE IN FEET

6. REQUIRED BEARING AREAS ARE BASED ON ALLOWABLE SOIL BEARING CAPACITY OF 2000 p.s.i. W/ A SAFETY FACTOR OF 1.7. PRESSURE OF FLUID FLOW IS BASED ON A 300' HEAD.
7. IN MUCK, PEAT OR RECENTLY PLACED FILL ALL THRUST SHALL BE RESISTED BY PILES OR TIE RODS TO SOLID FOUNDATIONS, OR BY REMOVAL OR SUCH UNSTABLE MATERIAL & REPLACEMENT W/ BALLAST OF SUFFICIENT STABILITY TO RESIST THRUSTS, ALL AS REQUIRED BY THE ENGINEER.

REQUIRED BEARING AREAS & DIMENSIONS FOR CONCRETE THRUST BLOCKS

PIPE SIZE INCHES	TEE		90° (1/4) BEND		45° (1/8) BEND		22-1/2° (1/16) BEND		11-1/4° (1/32) BEND	
	AREA SQ. FT.	DIMENSIONS D x L	AREA SQ. FT.	DIMENSIONS D x L	AREA SQ. FT.	DIMENSIONS D x L	AREA SQ. FT.	DIMENSIONS D x L	AREA SQ. FT.	DIMENSIONS D x L
6	4.21	1.8 x 2.5	5.96	2.0 x 3.0	3.22	1.5 x 2.3	1.65	1.3 x 1.5	0.83	0.83 x 1.3
8	7.24	2.5 x 3.0	10.24	2.8 x 3.8	5.54	2.3 x 2.5	2.82	1.5 x 1.5	1.42	1.0 x 1.5
10	10.89	2.8 x 4.0	15.40	3.3 x 4.8	8.33	2.5 x 3.5	4.25	1.8 X 2.5	2.14	1.3 x 2.0
12	12.40	3.5 x 4.5	21.77	4.5 x 5.0	11.78	3.0 x 4.0	6.01	2.3 x 2.8	3.02	1.5 x 2.3
16	26.75	4.8 x 5.8	37.83	5.8 x 6.8	20.48	4.0 x 5.3	10.44	2.8 x 4.0	5.25	2.3 x 2.5

NOTES:
1. VALUES FOR TEES APPLY TO TEES, END PLUGS, CAPS, AND TAPPING SLEEVES.
2. MINIMUM REQUIRED BEARING AREAS ARE DUE TO THRUSTS CAUSED BY 150 P.S.I. WORKING PRESSURE PLUS 50% (75 P.S.I) SURGE ALLOWANCE RESULTING IN 225 P.S.I. INTERNAL PRESSURE.
3. REQUIRED BEARING AREAS ARE BASED ON ALLOWABLE SOIL BEARING CAPACITY OF 2000 POUNDS PER SQUARE FOOT FOR SAND. DUE TO OTHER SOIL CONDITIONS WHICH MAY BE ENCOUNTED DURING THE WORK, THRUST BLOCK BEARING AREAS MAY BE MODIFIED BY THE ENGINEER OF RECORD BY MULTIPLYING THE MINIMUM REQUIRED BEARING AREA GIVEN IN THE TABLE ABOVE FOR THE APPROPRIATE PIPE SIZE AND FITTING BY THE CORRECTION FACTORS BELOW. THE CONTRACTOR SHALL NOTIFY THE ENGINEER CONCERNING ENCOUNTERED SOIL CONDITIONS WHICH ARE NOT SAND. THE CONTRACTOR SHALL NOT MODIFY THE REQUIRED THRUST BLOCK SIZES WITHOUT THE ENGINEER'S WRITTEN APPROVAL.

INSITU SOIL CONDITION	ALLOWABLE SOIL PRESSURE (LBS./SQ.FT.)	CORRECTION FACTOR
SOFT CLAY	1000	2.00
SAND	2000	1.00
SAND & GRAVEL	3000	0.67
CEMENTED W/CLAY	4000	0.50
HARD SHALE	10,000	0.20

4. IN MUCK, PEAT, OR RECENTLY PLACED FILL ALL THRUSTS SHALL BE RESISTED BY STEEL PILES OR TIE ROD ANCHORAGE TO SOLID APPROVED FOUNDATIONS, OR BY REMOVAL OF SUCH UNSTABLE MATERIAL AND REPLACEMENT WITH BALLAST OF SUFFICIENT STABILITY TO RESIST THE THRUSTS, ALL AS REQUIRED BY THE ENGINEER. ALL PROPOSED PILE CONFIGURATIONS THE CONTRACTOR WISHES TO UTILIZE IN THE WORK SHALL BE DESIGNED AND CERTIFIED BY A QUALIFIED NEW YORK STATE LICENSED PROFESSIONAL ENGINEER HIRED BY THE CONTRACTOR. THE COST OF SAID PROFESSIONAL ENGINEERING SERVICES SHALL BE PAID BY THE CONTRACTOR AT NO ADDITIONAL COST TO THE OWNER. ALL PILE CONFIGURATIONS AND RESPECTIVE ENGINEERING COMPUTATIONS (AND ANY OTHER SUPPORTING DOCUMENTATION AS DEEMED NECESSARY BY THE ENGINEER OF RECORD), AS PROPOSED BY THE CONTRACTOR, SHALL BE SUBMITTED TO THE ENGINEER OF RECORD FOR CONTENT REVIEW AND COMMENT; ALL SUBMITTALS SHALL DEPICT A SIGNED AND DATED LICENSED PROFESSIONAL ENGINEER'S SEAL BELONGING TO THE ENGINEER HIRED BY THE CONTRACTOR.
5. ALL CAST-IN-PLACE CONCRETE THRUST BLOCKS SHALL BE CONSTRUCTED OF 3,000 PSI MINIMUM CONCRETE HAVING A MAXIMUM WATER-TO-CEMENT RATIO OF 0.44, A MINIMUM CEMENT CONTENT OF 630 POUNDS PER CUBIC YARD AND A MAXIMUM SLUMP OF 4 INCHES AT POINT OF PLACEMENT. ALL CONCRETE THRUST BLOCKS SHALL BEAR AGAINST UNEXCAVATED/UNDISTURBED VIRGIN SOIL OF THE PIPE TRENCH VERTICAL WALL. ALL THRUST BLOCK BEARING AREAS SHALL BE BASED ON THE ACTUAL CONTACT AREA OF THE THRUST BLOCK AGAINST THE VERTICAL TRENCH FACE; CONTACT AREAS OF THRUST BLOCKS AGAINST SLOPED TRENCH WALL FACES WILL NOT UTILIZED IN COMPUTING CONTACT AREAS.
6. CONCRETE UTILIZED FOR CONSTRUCTING THRUST BLOCKS SHALL NOT OVERLAP ANY PIPE JOINT, FITTING/PIPE JOINT, MECHANICAL JOINT RETAINER GLAND AND FERROUS-BASED RESTRAINT ANCHORAGE ASSEMBLIES.
7. CONCRETE THRUST BLOCKS SHALL BE PLACED IN SUCH A MANNER SO AS NOT TO INTERFERE WITH ANY FUTURE REMOVAL AND/OR MAINTENANCE OF FITTING RESTRAINT HARDWARE. ALL PIPE FITTINGS RECEIVING CONCRETE THRUST BLOCKS SHALL BE WRAPPED WITH 6-MIL MINIMUM POLYETHALENE PLASTIC SHEETS TO PREVENT CONCRETE BONDING TO FERROUS FITTINGS AND RESTRAINT HARDWARE.
8. CONCRETE THRUST BLOCKS SHALL BE PLACED IN SUCH A MANNER SO AS NOT TO BEAR UPON NEW AND EXISTING CONSTRUCTIONS, AND ANY AND ALL UNDERGROUND UTILITIES WHICH MAY OR MAY NOT BE IMPACTED UPON DUE TO IMPARTED WATER MAIN THRUSTS; NO THRUST BLOCK SHALL BE PLACED WHEN THERE IS NOT AT LEAST A 10 FOOT MINIMUM SEPARATION BETWEEN THE REAR OF THE THRUST BLOCK AND AN EXISTING UNDERGROUND UTILITY, UNLESS WRITTEN APPROVAL IS RECEIVED FROM BOTH THE UTILITY OWNER AND THE ENGINEER.

2 THRUST BLOCK DETAILS/NOTES

N.T.S.

NOTE:
(REFERENCE- "TEN STATE STANDARDS")
WHEN INSTALLED PARALLEL, ALL WATER AND SEWER LINES SHALL HAVE A MINIMUM SEPARATION OF 10', EDGE TO EDGE. IF MINIMUM CANNOT BE MAINTAINED, WATER MAIN SHALL BE IN SEPARATE TRENCH OR ON AN UNDISTURBED EARTH SHELF TO ONE SIDE OF SEWER, WITH BOTTOM OF WATER MAIN 18" MINIMUM ABOVE TOP OF SEWER PIPE. WHEN CROSSING, MAINS SHALL BE INSTALLED TO INSURE 18" MINIMUM VERTICAL SEPARATION BETWEEN PIPES, OUTSIDE TO OUTSIDE. WHERE WATER MAIN IS UNDERNEATH SEWER, ADEQUATE STRUCTURAL SUPPORT SHALL BE PROVIDED FOR THE SEWER TO PREVENT DAMAGE TO WATER MAIN. WHEN IT IS IMPOSSIBLE TO PROVIDE THE ABOVE MINIMUMS, THE SEWER SHALL BE DESIGNED AND CONSTRUCTED EQUAL TO WATER PIPE, AND SHALL BE PRESSURE TESTED TO ASSURE WATERTIGHTNESS PRIOR TO BACKFILLING.

3 UTILITY CROSSING DETAIL

N.T.S.

4 CONN. TO EXISTING WATER MAIN DETAIL

N.T.S.

5 NEW WATER MAIN VALVE INSTALLATION DETAIL

N.T.S.

Approval
Approved under authority of a resolution adopted ______ by the Planning Board of the City of Saratoga Springs.
______ Chairperson
Date Signed ______

the LA group
Landscape Architecture and Engineering, PC
40 Long Alley
Saratoga Springs
New York 12866
P 518/587-8100
F 518/587-0180
www.thelagroup.com

Unauthorized alteration or addition to this document is a violation of Section 7209 of the New York State Education Law

© the LA Group 2008

Design MCB
Drawn MCB
Checked CMI

PREPARED FOR:
The PIKE Company, INC.
210 Clifton Corporate Parkway
Clifton Park, NY 12065

246 WEST AVENUE
RESIDENTIAL CONDOMINIUM COMPLEX
SARATOGA SPRINGS, NY

Title
SITE DETAILS

Revisions
MYLAR CHECK SET 9/28/2012
MYLAR SET NOVEMBER 2012
May 2014

City #: 12.006.1
Project: 201178
Date: 1/25/2012

Drawing
L-9

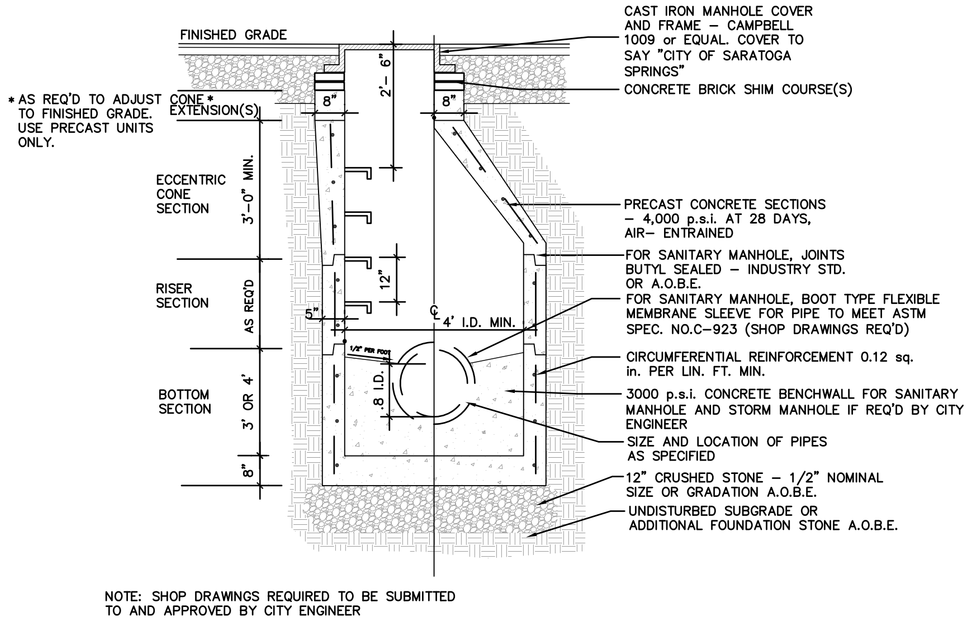

NOTE: SHOP DRAWINGS REQUIRED TO BE SUBMITTED TO AND APPROVED BY CITY ENGINEER

1 SANITARY SEWER MANHOLE DETAIL

N.T.S.

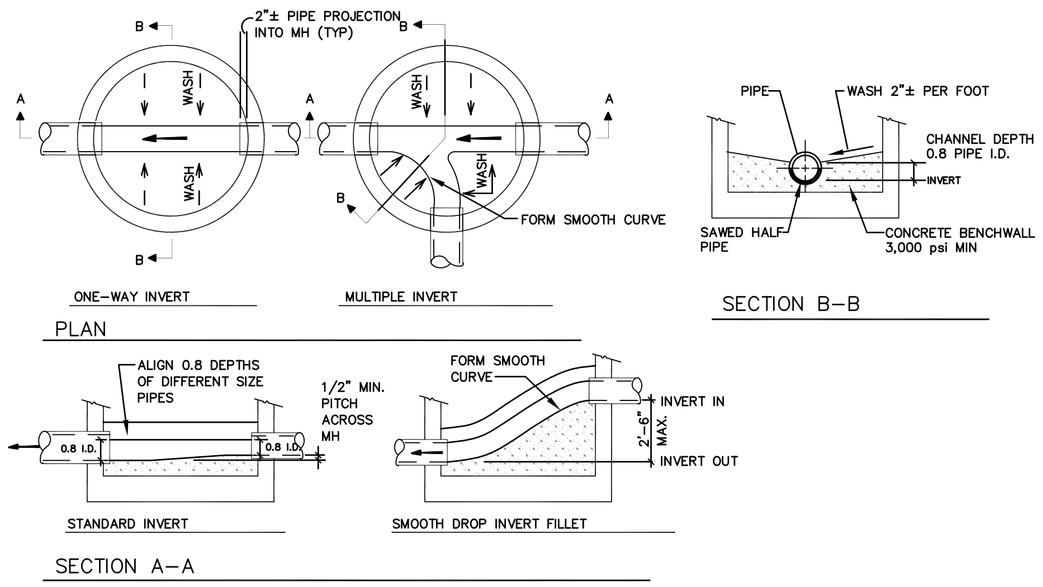

2 MANHOLE BENCH DETAIL

N.T.S.

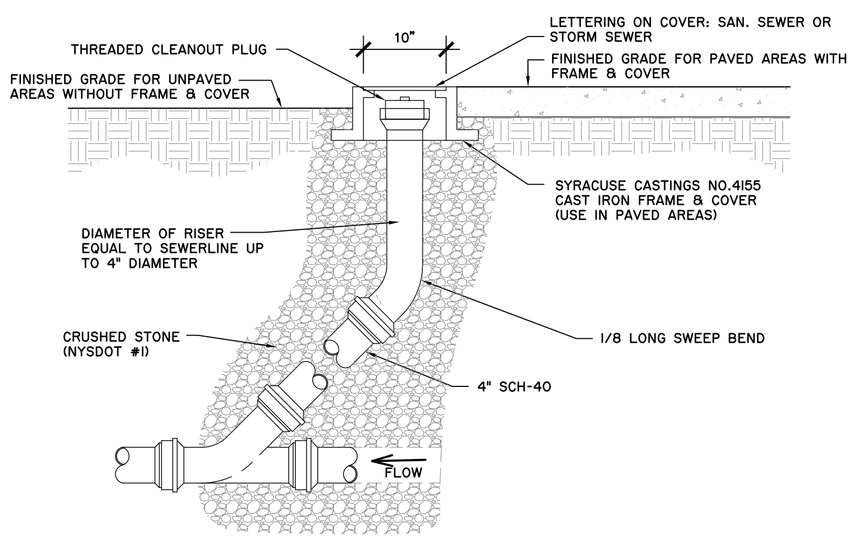

3 SANITARY SEWER CLEANOUT DETAIL

N.T.S.

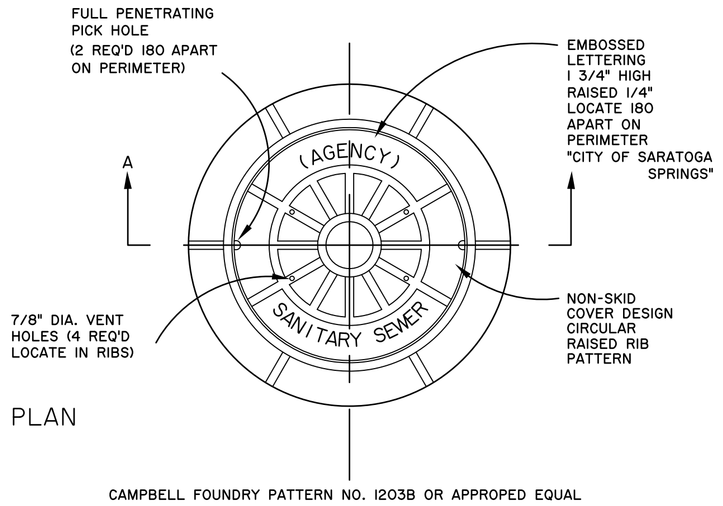

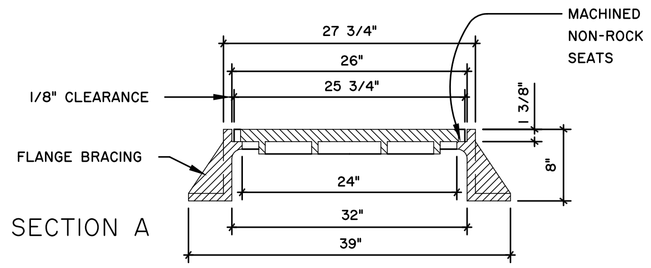

NOTE:
1) FRAME AND COVER SHALL CONFORM TO A.S.T.M. A536 (DUCTILE IRON) AND SAFELY WITHSTAND A.A.S.H.T.O. H520-44 HIGHWAY LOADING
2) FRAME AND COVER SHALL RECEIVE FACTORY APPLIED BITMASTIC COATING

4 SANITARY MANHOLE FRAME AND COVER DETAIL

N.T.S.

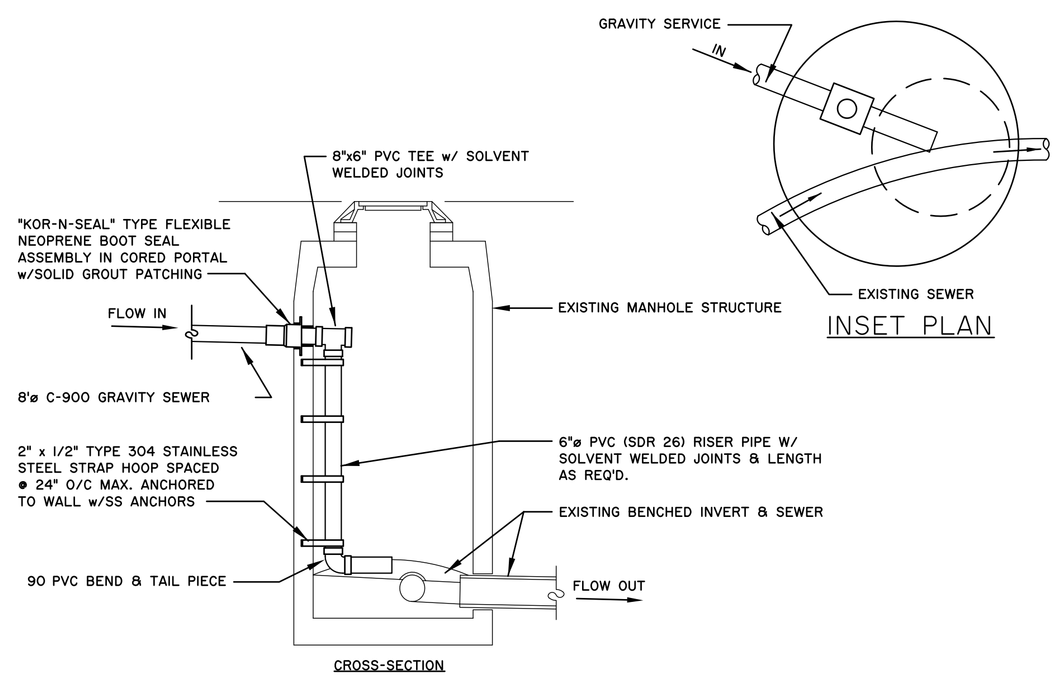

NOTES:
1) WORK EXCAVATION SHALL BE KEPT DRY AND DEWATERED AT ALL TIMES
2) EXCAVATION, BACKFILL, AND RESTORATION WITHIN HIGHWAY R.O.W. IN ACCORDANCE WITH NYSDOT SPECIFICATIONS
3) CONNECTION MATERIALS & METHODS IN ACCORDANCE WITH S.C.S.D. #1 SPECIFICATIONS.

5 SANITARY DROP @ EXISTING MANHOLE

N.T.S.

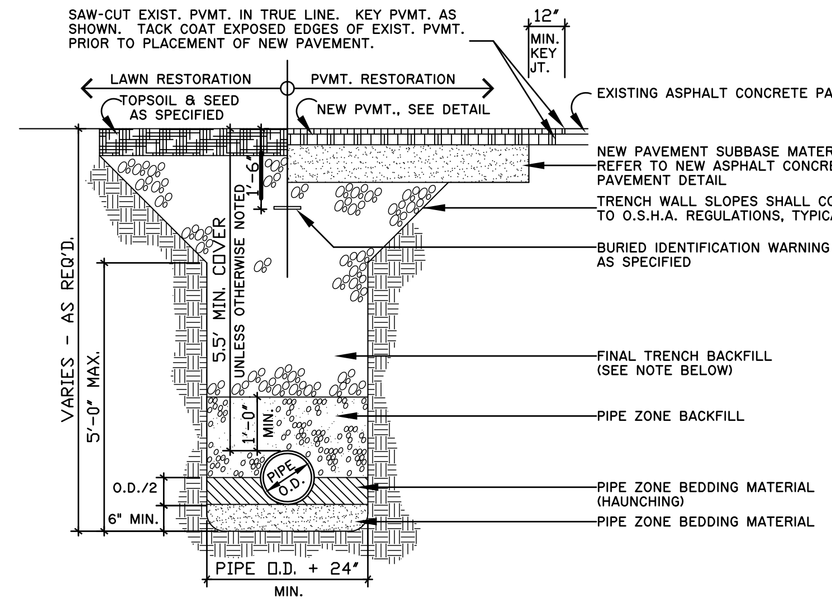

ITEM	DEPTH	MATERIAL	NYSDOT TYPE AGGREGATE	METHOD OF PLACEMENT
PIPE ZONE BEDDING (ENCOUNTERED DRY COND.)	6" MIN.	CRUSHED STONE	1	MECHANICAL COMPACTION
PIPE ZONE BEDDING (HAUNCHING/ ENCOUNTERED WET CONDITION)	6" MIN.	CRUSHED STONE	2	MECHANICAL COMPACTION
PIPE ZONE BEDDING (HAUNCHING)	PIPE O.D./2	CRUSHED STONE	1	MECHANICAL COMPACTION
PIPE ZONE BACKFILL	12" MIN. COVER	CRUSHED STONE	1	MECHANICAL COMPACTION
FINAL TRENCH BACKFILL	VARIES	SEE NOTE	SEE NOTE	MECHNANICAL COMPACTION

NOTES:
1) FINAL TRENCH BACKFILL
   a) IN NON-PAVED AREAS, FINAL TRENCH BACKFILL SHALL BE EXCAVATED MATERIAL WHEN DETERMINED SUITABLE BY THE ENGINEER OF RECORD, OTHERWISE IT SHALL BE NYSDOT TYPE 1 (ITEM NO. 304.02). MIN. MOD. PROCTOR DENSITY SHALL BE 90 PERCENT.
   b) IN PAVED AREAS, FINAL TRENCH BACKFILL SHALL BE NYSDOT TYPE 2 (ITEM NO. 304.03). MIN. MODIFIED PROCTOR DENSITY SHALL BE 95 PERCENT.
2) ALL PIPE ZONE BEDDING, PIPE ZONE BACKFILL, AND FINAL TRENCH BACKFILL SHALL BE PLACED IN 6 INCH MAXIMUM, COMPACTED LIFTS. ALL BEDDING AND BACKFILL MATERIALS SHALL BE MECHANICALLY COMPACTED TO THE SATISFACTION OF THE ENGINEER.
3) EXCAVATION SHALL BE KEPT DRY AND DEWATERED AT ALL TIMES DURING TRENCHING OPERATIONS.
4) ALL PAVEMENT SAWCUTS SHALL BE IN SOUND EXISTING PAVEMENT ACCEPTABLE TO THE ENGINEER.

6 TYPICAL WATER PIPE TRENCH DETAIL

N.T.S.

Approval

Approved under authority of a resolution adopted _____ by the Planning Board of the City of Saratoga Springs.

_____ Chairperson

Date Signed _____

the LA group
Landscape Architecture and Engineering, PC
40 Long Alley
Saratoga Springs
New York 12866
P 518/587-8100
F 518/587-0180
www.thelagroup.com

Unauthorized alteration or addition to this document is a violation of Section 7209 of the New York State Education Law

© the LA Group 2008

Design MCB
Drawn MCB
Checked CMI

PREPARED FOR:
The PIKE Company, INC.
210 Clifton Corporate Parkway
Clifton Park, NY 12065

246 WEST AVENUE
RESIDENTIAL CONDOMINIUM COMPLEX
SARATOGA SPRINGS, NY

Title
SITE DETAILS

Revisions
MYLAR CHECK SET 9/28/2012
MYLAR SET NOVEMBER 2012
May 2014

City #: 12.006.1
Project: 201178
Date: 1/25/2012

Drawing
L-10

Plotted By: MATT BRIDGETON
Save Date: 11/19/2012 5:11 PM
File Name: G:\PROJECTS\201178_West_Ave_246\2011780ADfs\7_DETS.dwg

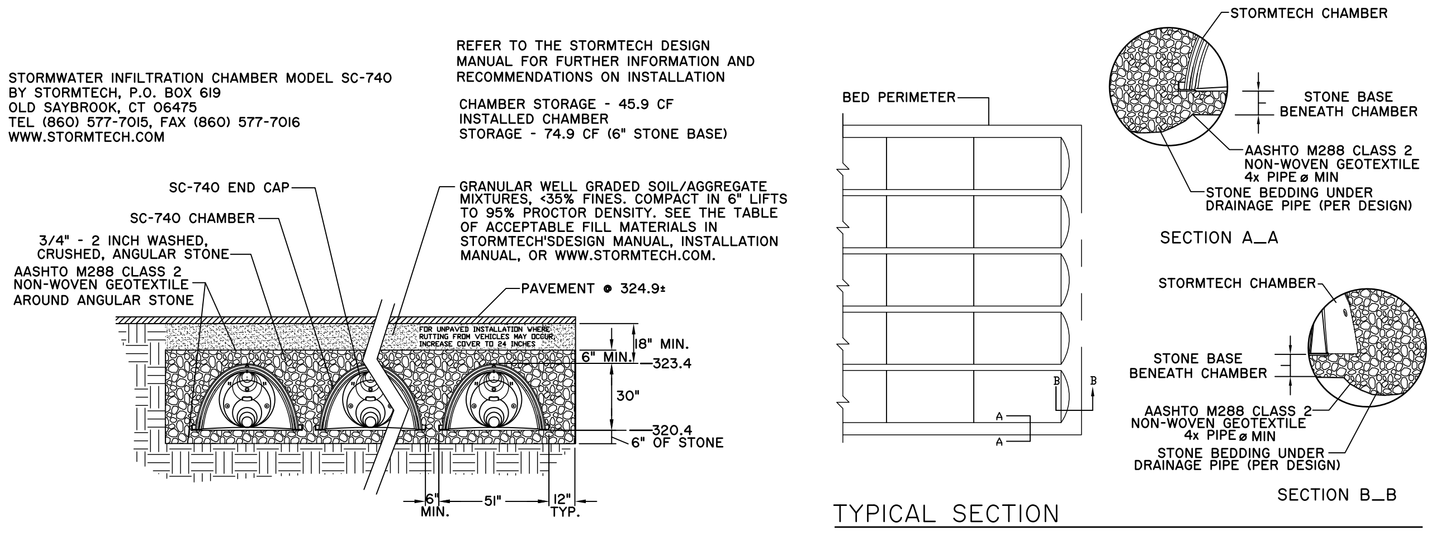

1 STORMWATER INFILTRATION CHAMBER DETAIL

N.T.S.

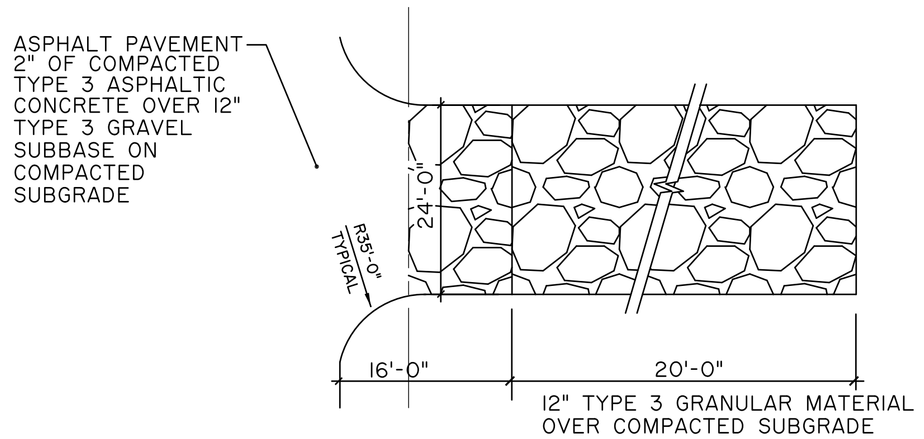

2 STABILIZED CONSTRUCTION ACCESS

N.T.S.

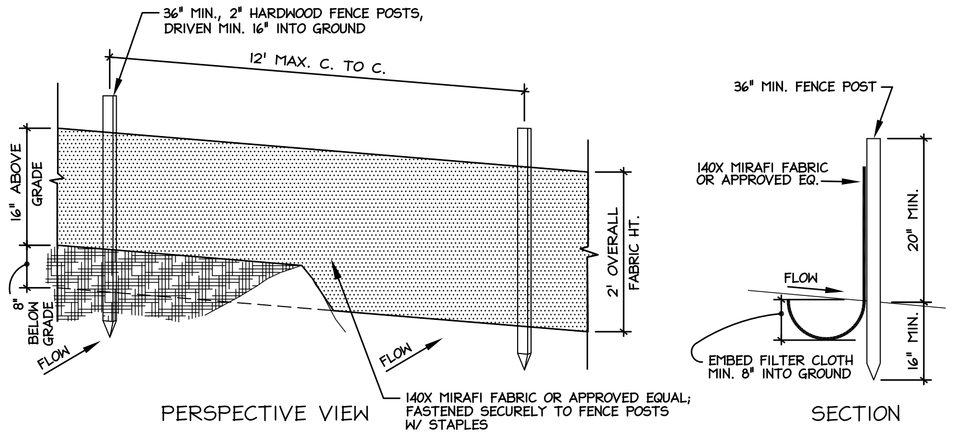

3 SILT FENCE DETAIL

N.T.S.

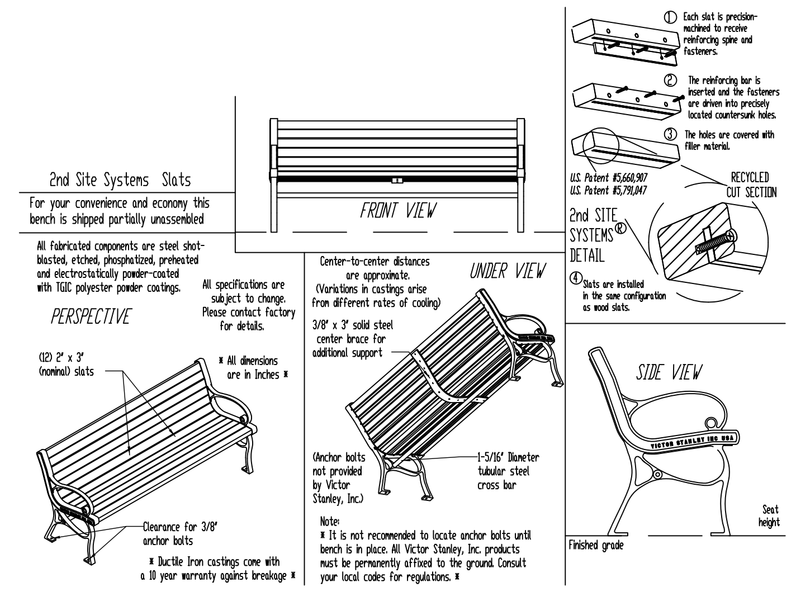

4 6' BENCH DETAIL

N.T.S.

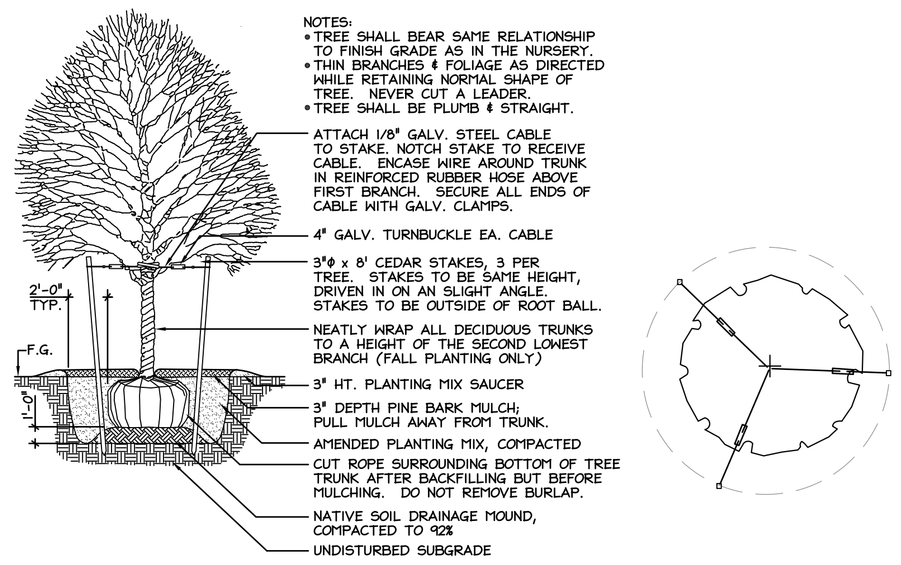

5 DECIDUOUS TREE PLANTING

SCALE: NTS

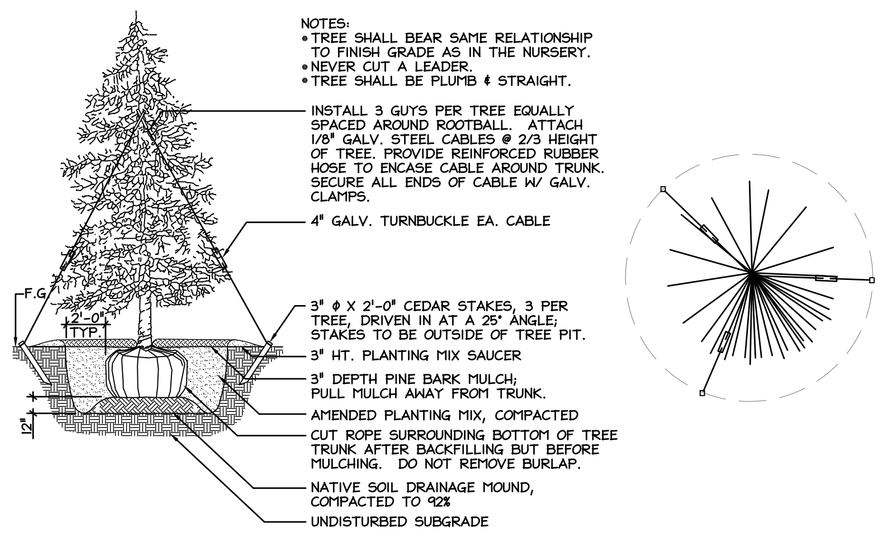

6 EVERGREEN TREE PLANTING

SCALE: NTS

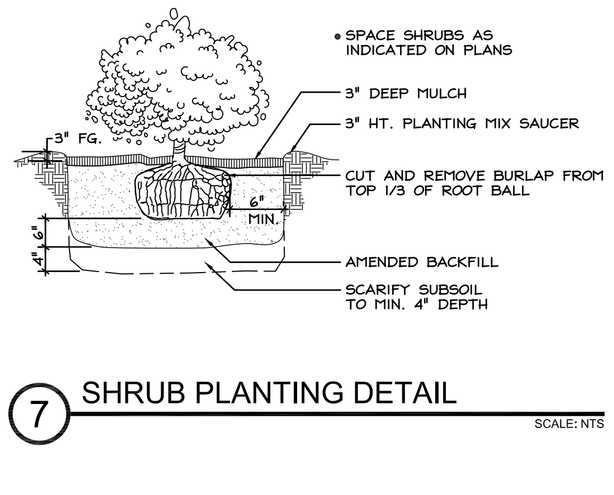

7 SHRUB PLANTING DETAIL

SCALE: NTS

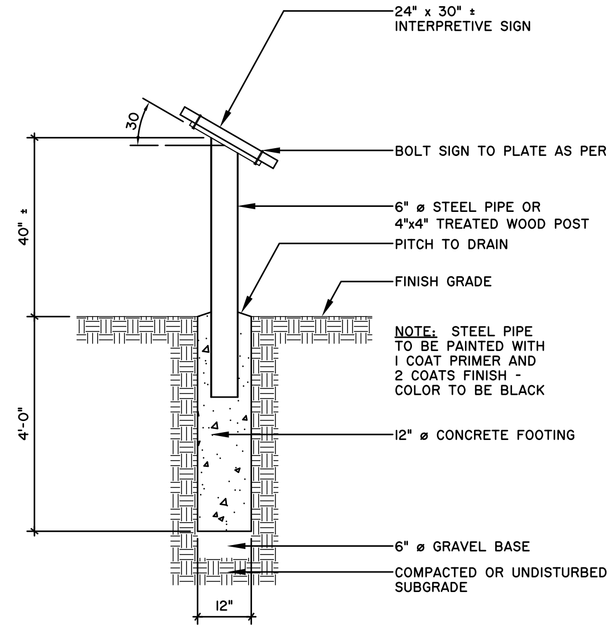

8 INTERPRETIVE SIGN DETAIL

SCALE: 1/2" = 1'-0"

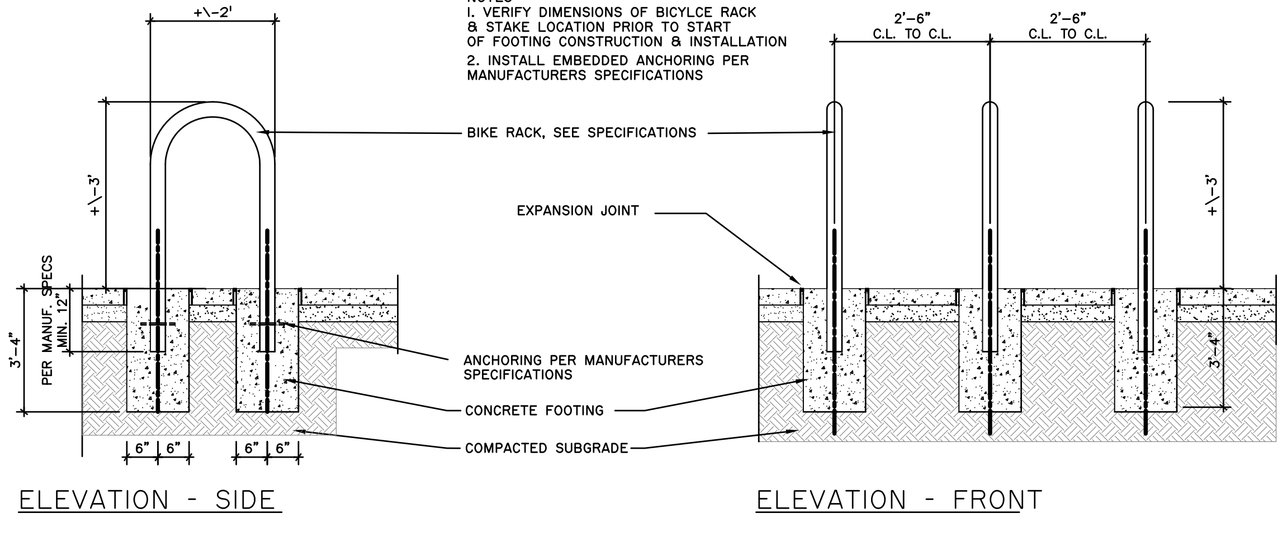

9 BICYCLE RACK

N.T.S.

Approval

Approved under authority of a resolution adopted _____ by the Planning Board of the City of Saratoga Springs.

_____ Chairperson

Date Signed _____

the LA group
Landscape Architecture and Engineering, PC
40 Long Alley
Saratoga Springs
New York 12866
P 518/587-8100
F 518/587-0180
www.thelagroup.com

Unauthorized alteration or addition to this document is a violation of Section 7209 of the New York State Education Law

© the LA Group 2008

Design MCB
Drawn MCB
Checked CMI

PREPARED FOR:
The PIKE Company, INC.
210 Clifton Corporate Parkway
Clifton Park, NY 12065

246 WEST AVENUE
RESIDENTIAL CONDOMINIUM COMPLEX
SARATOGA SPRINGS, NY

Title SITE DETAILS

Revisions
MYLAR CHECK SET 9/28/2012
MYLAR SET NOVEMBER 2012
May 2014

City #: 12.006.1
Project: 201178
Date: 1/25/2012

Drawing L-11

Plotted By: MATT BROBSTON
Save Date: 11/16/2012 5:11 PM
File Name: G:\Projects\12006.1\06 West Ave_246\2011\TRCAD\L-7_DETS.dwg

246 WEST AVE APARTMENTS

Saratoga, New York

PERSPECTIVE

RE4ORM ARCHITECTURE

246 WEST AVE APARTMENTS

Saratoga, New York

PERSPECTIVE

RE4ORM ARCHITECTURE

246 WEST AVE APARTMENTS

Saratoga, New York

PERSPECTIVE

RE4ORM ARCHITECTURE

[FOR OFFICE USE]

_____
(Application #)

_____
(Date received)

CITY OF SARATOGA SPRINGS

PLANNING BOARD

City Hall - 474 Broadway
Saratoga Springs, New York 12866-2296
Tel: 518-587-3550 fax: 518-580-9480
http://www.saratoga-springs.org

APPLICATION FOR:
SUBDIVISION APPROVAL

(Rev: 07/2016)

*****Application Check List - All submissions must include completed application check list and all required items.**

Project Name: ZUMPANO SUBDIVISION

Property Address/Location: 119 EAST AVENUE

Tax Parcel #: 166.38-1-16 Zoning District: UR-3
(for example: 165.52-4-37)

Total Acres: 0.430 AC Land to be Subdivided Into: 2 Lots

	APPLICANT(S)*	OWNER(S) *(If not applicant)*	ATTORNEY/AGENT
Name			BILL THOMPSON
Address	[redacted]		[redacted]
Phone			
Email			

Identify primary contact person: ☐ Applicant ☐ Owner ■ Agent

* An applicant must be the property owner, lessee, or one with an option to lease or purchase the property in question.

Application Fee: A check for the total amount below payable to: "Commissioner of Finance" MUST accompany this application.

☐ Sketch Plan – $400

☐ Preliminary Subdivision Plat Approval
1-20 Lots $400
21-50 Lots $600
51+ Lots $1,000
Fee submitted $ _____

☑ Final Subdivision Plat Approval
Residential - $1,000 plus $100/lot $ 1,100.00

Non-Residential - $1,500/lot $ _____

☐ Final Approval Modification
Residential- $250 $ _____

Non-Residential- $500 $ _____

Submission Deadline – Check City's website (www.saratoga-springs.org) for application deadlines and meeting dates.

Does any City officer, Does any City officer, employee or family member thereof have a financial interest (as defined by General Municipal Law Section 809) in this application? YES_____ NO ____✔__. If YES, a statement disclosing the name, residence, nature and extent of this interest must be filed with this application.

I, the undersigned owner or purchaser under contract for the property, hereby request Subdivision consideration by the Planning Board for the identified property above. I agree to meet all requirements under the Subdivision Regulations for the City of Saratoga Springs.

Furthermore, I hereby authorize members of the Planning Board and designated City staff to enter the property associated with this application for purposes of conducting any necessary site inspections relating to this application.

Applicant Signature: _____ Date: 8/4/16

If applicant is not current owner, owner must also sign.

Owner Signature: _____ Date: _____

CITY OF SARATOGA SPRINGS

PLANNING BOARD

City Hall - 474 Broadway
Saratoga Springs, New York 12866-2296
Tel: 518-587-3550 fax: 518-580-9480
http://www.saratoga-springs.org

[FOR OFFICE USE]

_____
(Application #)

_____
(Date received)

Rev.05/2016

PRELIMINARY/ FINAL SUBDIVISION APPROVAL REQUIRED SUBMITTAL CHECKLIST

1. Project Name: ZUMPANO SUBDIVISION

2. Checklist Prepared By: BILL THOMPSON Date: 8/4/16

Listed below are the minimum submittal requirements as set forth in The City of Saratoga Springs' Subdivision Regulations. The Planning Board reserves the right to request additional information, as necessary, to support an application. The Board also reserves the right to reject the application if these minimum requirements are not met. Please complete the checklist below and provide with your submission.

REQUIRED ITEMS: ***3 hard copies and 1 digital copy of ALL materials are required.**

CHECK EACH ITEM	
☐	1. Completed Subdivision Application (3 hard copies - *1 w/original signature - and 1 digital) and Fee
☐	2. SEQR Environmental Assessment Form- short or long form as required by action.
☑	3. Set of plans including: (3) large scale plans (sheets must be 24" x 36", drawn to a scale of not more than 1"=50 feet). One digital version of **all** submittal items (pdf) shall be provided.
☐	4. Basic or Full Storm Water Pollution Prevention Plan as required per City Code Chapter 242.
☐	5. Copy of signed DPW water connection agreement for all projects involving new water connections to the City system
☑	6. Engineering Report for Water and Sanitary
☑	7. Complete Streets Checklist
☑	8. Project Cost Estimate-Quantities of work items and estimate of costs

REQUIRED ITEMS ON SUBDIVISION PLAT, AS APPLICABLE:

☑	1. Name of Subdivision
☑	3. Property line survey prepared by a licensed land surveyor. Subdivision plat must reference such survey with all corners set and marked on plan. Reference NGVD 1929 datum. A copy of the original property survey must also be included.
☑	4. North arrow and map scale

☑	5. Parcel tax map number
☑	6. Site location map
☑	7. Site vicinity map (all features within 300 feet of property)
☑	8. Identification of current zoning with corresponding area requirements
☑	9. Building setback lines, either listed or shown on plans
☑	10. Title block with subdivision name; name and address of applicant; and name and address of property owner (if different)
☑	11. Name, address and phone number of subdivision surveyor and/or engineer
☑	12. Names of all adjacent property owners within 300 feet (include both sides of street)
☑	13. Identification of size, elevations, material, and slopes of all existing and proposed utilities within 400 ft of site.
☑	14. Parcel street address (existing and any proposed postal addresses)
Yes ☐ No ☐ N/A ☑	15. Identification of existing or proposed easements, covenants or legal rights-of-way on this property
☐ ☐ ☑	16. References to all prior variances or special use permits
☑ ☐ ☐	17. Existing and proposed contours and spot grades (at 2 foot intervals)
☐ ☐ ☑	18. Identification of all watercourses, designated State wetlands, buffers, Federal wetlands, floodplains, rock outcroppings, etc.
☑ ☐ ☐	19. Identification of all existing or proposed sidewalks or pedestrian paths (show type, size and condition of existing sidewalks)
☑ ☐ ☐	20. Location, design specifications and construction material for all proposed site improvements (drains, culverts, retaining walls, berms, fences, etc.)
☑ ☐ ☐	21. Location and distance to fire hydrant
☑ ☐ ☐	22. Erosion and sediment control plan – including designated concrete truck washout area
☑ ☐ ☐	23. Approximate location, dimensions and areas for proposed lots and proposed public recreational land
☑ ☐ ☐	24. Proposal for utility systems and lateral connections
☐ ☐ ☑	25. Location and width of proposed streets

Short Environmental Assessment Form
Part 1 - Project Information

Instructions for Completing

Part 1 - Project Information. The applicant or project sponsor is responsible for the completion of Part 1. Responses become part of the application for approval or funding, are subject to public review, and may be subject to further verification. Complete Part 1 based on information currently available. If additional research or investigation would be needed to fully respond to any item, please answer as thoroughly as possible based on current information.

Complete all items in Part 1. You may also provide any additional information which you believe will be needed by or useful to the lead agency; attach additional pages as necessary to supplement any item.

Part 1 - Project and Sponsor Information

Name of Action or Project:
ZUMPANO SUBDIVISION

Project Location (describe, and attach a location map):
119 EAST AVENUE, SARATOGA SPRINGS, NY

Brief Description of Proposed Action:
SUBDIVIVIDE A PARCEL WITH AN EXISTING HOUSE INTO TWO LOTS AND BUILD A NEW HOUSE ON THE SECOND LOT

Name of Applicant or Sponsor:	Telephone:
ALBERT & NICOLE ZUMPANO	E-Mail:

Address:
[redacted]

City/PO:	State:	Zip Code:
[redacted]		

	NO	YES
1. Does the proposed action only involve the legislative adoption of a plan, local law, ordinance, administrative rule, or regulation? If Yes, attach a narrative description of the intent of the proposed action and the environmental resources that may be affected in the municipality and proceed to Part 2. If no, continue to question 2.	☑	☐
2. Does the proposed action require a permit, approval or funding from any other governmental Agency? If Yes, list agency(s) name and permit or approval:	☑	☐

3.a. Total acreage of the site of the proposed action? 0.43 acres
b. Total acreage to be physically disturbed? 0.10 acres
c. Total acreage (project site and any contiguous properties) owned or controlled by the applicant or project sponsor? 0.43 acres

4. Check all land uses that occur on, adjoining and near the proposed action.
☑ Urban ☐ Rural (non-agriculture) ☐ Industrial ☐ Commercial ☑ Residential (suburban)
☐ Forest ☐ Agriculture ☐ Aquatic ☐ Other (specify): _____
☐ Parkland

	NO	YES	N/A
5. Is the proposed action,			
a. A permitted use under the zoning regulations?	☐	☑	☐
b. Consistent with the adopted comprehensive plan?	☐	☑	☐

	NO	YES
6. Is the proposed action consistent with the predominant character of the existing built or natural landscape?	☐	☑
7. Is the site of the proposed action located in, or does it adjoin, a state listed Critical Environmental Area? If Yes, identify: _____	☑	☐
8. a. Will the proposed action result in a substantial increase in traffic above present levels?	☑	☐
b. Are public transportation service(s) available at or near the site of the proposed action?	☐	☑
c. Are any pedestrian accommodations or bicycle routes available on or near site of the proposed action?	☐	☑
9. Does the proposed action meet or exceed the state energy code requirements? If the proposed action will exceed requirements, describe design features and technologies: _____	☐	☑
10. Will the proposed action connect to an existing public/private water supply? If No, describe method for providing potable water: _____	☐	☑
11. Will the proposed action connect to existing wastewater utilities? If No, describe method for providing wastewater treatment: _____	☐	☑
12. a. Does the site contain a structure that is listed on either the State or National Register of Historic Places?	☑	☐
b. Is the proposed action located in an archeological sensitive area?	☑	☐
13. a. Does any portion of the site of the proposed action, or lands adjoining the proposed action, contain wetlands or other waterbodies regulated by a federal, state or local agency?	☑	☐
b. Would the proposed action physically alter, or encroach into, any existing wetland or waterbody? If Yes, identify the wetland or waterbody and extent of alterations in square feet or acres: _____	☑	☐

14. Identify the typical habitat types that occur on, or are likely to be found on the project site. Check all that apply:

☐ Shoreline ☐ Forest ☐ Agricultural/grasslands ☐ Early mid-successional

☐ Wetland ☑ Urban ☑ Suburban

	NO	YES
15. Does the site of the proposed action contain any species of animal, or associated habitats, listed by the State or Federal government as threatened or endangered?	☑	☐
16. Is the project site located in the 100 year flood plain?	☑	☐
17. Will the proposed action create storm water discharge, either from point or non-point sources? If Yes,		
a. Will storm water discharges flow to adjacent properties? ☑ NO ☐ YES	☐	☑
b. Will storm water discharges be directed to established conveyance systems (runoff and storm drains)? If Yes, briefly describe: ☐ NO ☑ YES		

EXISTING STORMWATER SYSTEM IS IN PLACE

	NO	YES
18. Does the proposed action include construction or other activities that result in the impoundment of water or other liquids (e.g. retention pond, waste lagoon, dam)? If Yes, explain purpose and size: _____ _____ _____	☑	☐
19. Has the site of the proposed action or an adjoining property been the location of an active or closed solid waste management facility? If Yes, describe: _____ _____ _____	☑	☐
20. Has the site of the proposed action or an adjoining property been the subject of remediation (ongoing or completed) for hazardous waste? If Yes, describe: _____ _____ _____	☑	☐

I AFFIRM THAT THE INFORMATION PROVIDED ABOVE IS TRUE AND ACCURATE TO THE BEST OF MY KNOWLEDGE

Applicant/sponsor name: WILLIAM THOMPSON Date: 8/1/2016

Signature: _____

PRINT FORM

City of Saratoga Springs Complete Streets Checklist

Saratoga Springs Complete Street Policy Vision (May 2012)

The City of Saratoga Springs Complete Streets Policy will encourage the development of a complete streets network throughout the City to create a more balanced transportation system. The Policy shall be consistent with and assist in achieving the goals and recommendations set forth in the City's Comprehensive Plan and other policy documents. The Policy shall ensure new and updated public and private projects are planned, designed, maintained and operated to enable safer, comfortable and convenient travel to the greatest extent possible for users of all abilities including pedestrians, bicyclists, motorists and transit riders.

This checklist is intended to assist the City in achieving its vision for complete streets.

Project Name: ZUMPANO SUBDIVISION **Date:** 8/4/16

Project Location / Limits: 119 EAST AVENUE

Project Description: 2 LOT SUBDIVISION

Instructions: For each box checked, please provide a brief description for how the item is addressed, not addressed, or not applicable and include supporting documentation.

Street Classification (identify street or streets within the project area)
Principal arterial ☐ Minor arterial ☐ Mixed use collector ☐ Mixed use local ☐ Residential collector ■ Residential local ☐ Special use street ☐

EXISTING CONDITIONS				
Item to Be Addressed/ Checklist Consideration	**YES**	**NO**	**N/A**	**Required Description**
Existing Bicycle & Pedestrian Operations				
Do bicycle and pedestrian accommodations exist? (see page 2 for examples)	☐	☑	☐	SIDEWALK ACROSS EAST AVE
Existing Transit Operations				
Do transit facilities exist within the study area, including bus and train stops/stations?	☐	☑	☑	
Is the project area on a transit route? (CDTA Service Routes)	☐	☐	☐	
Are there bicycle racks, shelters, or parking for transit riders available?	☐	☑	☑	
Existing Access and Mobility				
Do connective opportunities exist with schools, hospitals, senior care or community centers or persons with disabilities within project area?	☐	☑	☐	
Are there gaps inhibiting continuous access between schools, hospitals, senior care, or community centers or persons with disabilities within project area?"	☐	☑	☐	
Project Area Context				
Are there prominent landmarks, recreation, shopping, employment center, cultural centers or other key destinations that offer opportunities to connect this site?	☐	☑	☐	
Please list and/or describe planning or policy documents addressing bicyclist, pedestrian, transit, or truck/ freight use for the project area. Examples can include: City of Saratoga Springs Comprehensive Plan, City of Saratoga Springs Open Space Plan, Capital District Transportation Committee Bicycle/ Pedestrian Priority Network, City Standard Details, etc.				

PROPOSED DESIGN				
Item to Be Addressed/ Checklist Consideration	**YES**	**NO**	**N/A**	**Required Description**
Complete Streets Design				
Bicyclist accommodations?	☐	☑	☐	
Pedestrian accommodations?	☐	☑	☐	
Access and Mobility accommodations?	☐	☐	☐	SIDEWALK
Transit accommodations?	☑	☑	☐	
Truck/ freight accommodations?	☐	☐	☑	
Streetscape elements?	☑	☐	☐	SIDEWALK, STREET LIGHT

Bike Facilities:	
Off-roadway bike accommodations	☐ Yes ☑ No ☐ NA
Dedicated bike lane	☐ Yes ☑ No ☐ NA
Shared-use lane	☐ Yes ☑ No ☐ NA
Shoulder	☐ Yes ☑ No ☐ NA
Acceptable actuated traffic signal bike detection, including turn lanes	☐ Yes ☑ No ☐ NA
Do signals allow adequate minimum green time for bicyclist to safely cross intersection?	☐ Yes ☐ No ☑ NA
Signage and pavement markings specific to proposed bike facilities	☐ Yes ☐ No ☑ NA
Bicycle safe inlet grates	☑ Yes ☐ No ☐ NA
Bicycle parking, eg. bike racks, bike lockers	☐ Yes ☑ No ☐ NA
Transit Facilities:	
Transit shelters	☐ Yes ☑ No ☐ NA
Bus turnouts	☐ Yes ☑ No ☐ NA
Standing pads	☐ Yes ☑ No ☐ NA
Has CDTA been contacted?	☐ Yes ☑ No ☐ NA
Access and Mobility Facilities:	
Adequate sidewalk or paved path	☑ Yes ☐ No ☐ NA
Acceptable consideration/provision for accessible pedestrian traffic signal features	☐ Yes ☐ No ☑ NA
Curb ramps, including detectable warning surface	☐ Yes ☐ No ☑ NA
Acceptable slope and cross-slope for driveway ramps, sidewalks, crossings)	☐ Yes ☐ No ☑ NA
Have conflicts been reduced among pedestrian, bicyclists, and motor vehicles (access management)?	☐ Yes ☐ No ☑ NA

Pedestrian Facilities:	
Sidewalks on both sides of the street	☑ Yes ☐ No ☐ NA
Striped crosswalks	☐ Yes ☑ No ☐ NA
Geometric modifications to reduce crossing distances such as curb extensions (e.g. bulb-outs)	☐ Yes ☐ No ☑ NA
Acceptable provision for pedestrian traffic signal features (e.g. ped. buttons)	☐ Yes ☐ No ☑ NA
Pedestrian signage for crossing & wayfinding	☐ Yes ☐ No ☑ NA
Safety islands/medians on roadways with two or more traffic lanes in each direction	☐ Yes ☐ No ☑ NA
Enhanced supplemental pedestrian treatments at uncontrolled marked crossings	☐ Yes ☐ No ☑ NA
Connectivity:	
Are there proposed connections to other bike paths, pedestrian facilities, or transit facilities?	☐ Yes ☐ No ☑ NA
Are there proposed connections to any key destinations listed on page 1?	☐ Yes ☐ No ☑ NA
Are there proposed connections to neighborhoods?	☐ Yes ☐ No ☑ NA
Streetscape Elements:	
Are streetscape elements proposed such as landscaping, street trees, planters, buffer strips, etc?	☑ Yes ☐ No ☐ NA
Pedestrian-level lighting	☑ Yes ☐ No ☐ NA
Public seating or benches	☐ Yes ☐ No ☑ NA

Design Standards and Guidelines				
Design meets guidelines such as described below for bicycle/pedestrian/bus/transit facilities?	☐ Yes	☐ No	☑ NA	Describe

***American Association of State Highway and Transportation Officials (AASHTO**) - *A Policy on Geometric Design of Highway and Streets, Guide for the Development of Bicycle Facilities and AASHTO Guide for the Planning, Design, and Operation of Pedestrian Facilities; Public Right-of-Way Accessibility Guide*(PROWAG); *Manual on Uniform Traffic Control Devices* (MUTCD); *Americans with Disabilities Act Accessibility Guidelines* (ADAAG); **National Association of City Transportation Officials (NACTO)** - *Urban Bikeway Design Guide*. **New York State Department of Transportation** – *Highway Design Manual*

August 2, 2016

Mr. Tim Wales
City Engineer
Saratoga Springs, NY

RE: Zumpano Subdivision
119 East Avenue
Saratoga Springs, NY

Site Improvements Cost Estimate for Letter Of Credit

1) 5’ wide concrete sidewalk – 755s.f @ $5.25 = $3900.00
2) Decorative street light - $3000.00
3) Water connection & restoration - $1200.00
4) Sanitary sewer connection & restoration - $1200.00
5) As-Built Drawing - $1000.00

Total Letter of Credit Amount = $10,300.00

Location Map

Survey Note:

Elevations are based on NGVD 1929 datum.

City of Saratoga Springs Standard Notes

1. All work must conform to all Federal, State and City Codes, specifications, ordinances, rules and regulations.
2. The elevation base for the contours and benchmarks are based on the National Geodetic Vertical Datum, 1929.
3. All refuse, debris and miscellaneous items to be removed shall be legally disposed of off-site by the Contractor to a location approved by the City Engineer.
4. The Contractor must set up a pre-construction meeting with the City Engineer prior to any construction. Construction inspections by a designated representative of the applicant are required. The cost of the construction inspection is the responsibility of the Applicant/Developer. An escrow account to cover the cost of the inspections must be established prior to any construction.
5. The Contractor must obtain a blasting permit from the Building Inspector if any blasting is required.
6. The Contractor must obtain a street opening permit issued by the Department of Public Works for any work in the street or right of way of any City street or road or alley.
7. All points of construction ingress or egress shall be maintained to prevent tracking or flowing of sediment or debris onto a public road.
8. No Certificate of Occupancy will be issued until all site work has been completed in accordance with the approved plans and an as-built drawing has been prepared in accordance with the requirements of the City Engineer.
9. The Applicant must verify that the proposed project can accommodate the turning movements of any fire truck that the fire department do designates.

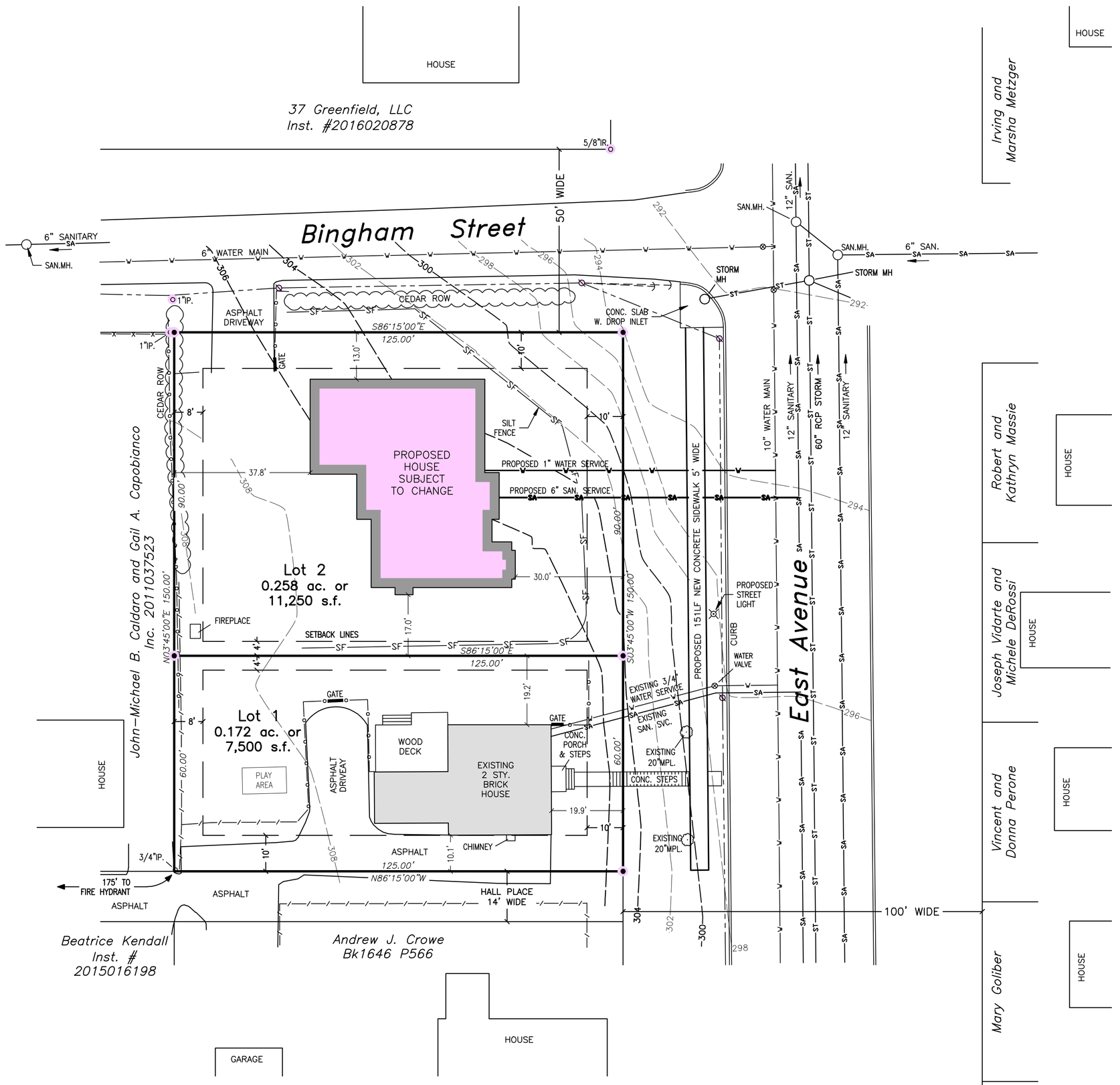

North

SUBDIVISION PLAN

1" =20'

Map Legend

- • 5/8" steel rod set with a tag
- ○ marker found, labeled
- ⌀ utility pole
- ——— - - ——— overhead wires
- —x—x—x—x— wire fence

Deed Reference:

Albert J. Zumpano and
Nicole L. Zumpano
Inst. #2012029611

Owner/Applicant

Albert & Nicole Zumpano
119 East Avenue
Saratoga Springs, NY 12866

Tax Parcel #166.38-1-16

UR-3 AREA REQUIREMENTS

Zoning District	Minimum Lot size Square Feet	Mean Average Width (feet)	Maximum Percent of Lot to be Occupied		Minimum Yard Dimensions				Principal Buildings		Accessory Building Minimum Distance to				
			Principal Building	Accessory Building	Front (feet)	Rear (feet)	Each Side (feet)	Total Side (feet)	Minimum First Floor Area (square feet)	Maximum Height (feet)	Principal Building (feet)	Front Lot Line (feet)	Side Lot Line (feet)	Rear Lot Line (feet)	Minimum Percent of Lot to be Permeable
UR-3	6,600 1-unit / 8,000 2-unit	60 1-unit / 80 2-unit	30	10	10	25	4	12	1 Story=1,200 2 Story=800	60	5	10	5	5	25

Approved under authority of a resolution adopted_____ by the Planning Board of the City of Saratoga Springs.

_____ _____
Chairperson Date Signed

PLANNING BOARD #

Subdivision
for
Albert and Nicole Zumpano
Situate at
119 East Avenue
City of Saratoga Springs, Saratoga County NY

THOMPSON / FLEMING
LAND SURVEYORS, P.C.
12 Lake Avenue
Saratoga Springs NY
12866
Voice: (518) 587-5665
Fax : (518) 587-5772

DATE	DESCRIPTION
REVISIONS	
DATE: July 14, 2016	
JOB NO.: S16-157.24	
DRAWN BY: DES	
CHKD.BY: WMT	
TAX MAP: 166.38-1-16	
SCALE: 1" = 20' (10 0 10 20)	

S1

S16-157.24

P:\Zumpano, 119 East Ave S16-157\dwg\S16-157 Zumpano.dwg

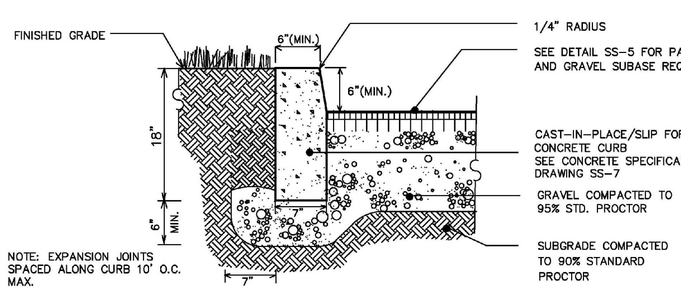

TYPE 1 CURB - CAST-IN-PLACE/SLIP FORM CONCRETE AT TURF

N.T.S.

APPROVED: PLANNING BOARD 1/13/2010 DATE	CITY OF SARATOGA SPRINGS, NEW YORK STANDARD DETAIL Type 1 Curb	DWG No SS-15

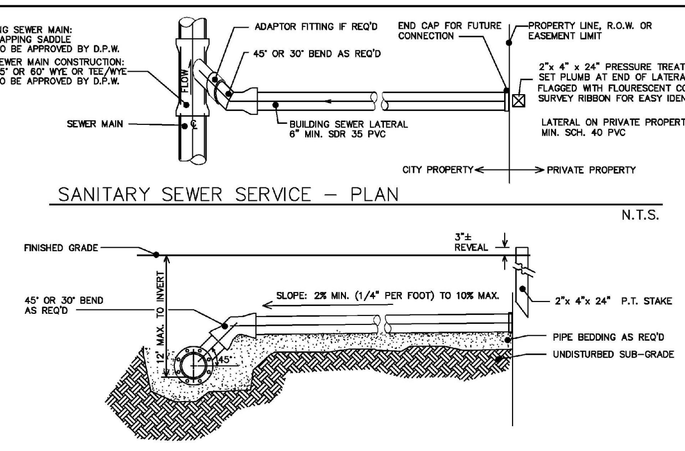

SANITARY SEWER SERVICE - PLAN

N.T.S.

SANITARY SEWER SERVICE - SECTION

N.T.S.

NOTES:
1.) THE BUILDING SEWER FROM THE BUILDING TO THE SEWER MAIN IS THE OWNER'S RESPONSIBILITY.
2.) CONNECTION TO PUBLIC SANITARY SEWER IS REQUIRED WHEN AVAILABLE PER CITY CODE SECTION 231-14.
3.) A STREET OPENING PERMIT IS REQUIRED FROM THE DEPT. OF PUBLIC WORKS PRIOR TO ANY WORK IN THE PUBLIC RIGHT-OF-WAY.
4.) ANY PART OF THE BUILDING SEWER WITHIN 10 FEET OF WATER SERVICE PIPE SHALL BE CONSTRUCTED OF WATERTIGHT JOINTS.

APPROVED: PLANNING BOARD 1/13/2010 DATE	CITY OF SARATOGA SPRINGS, NEW YORK STANDARD DETAIL Sanitary Sewer Service	DWG No SA-3

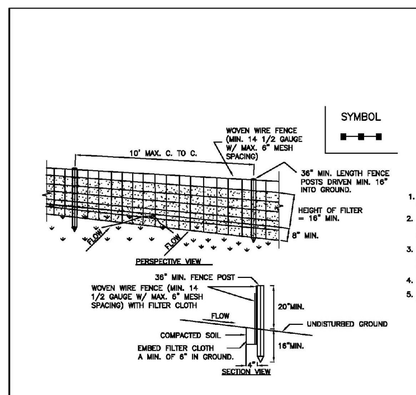

CONSTRUCTION SPECIFICATIONS

1. WOVEN WIRE FENCE TO BE FASTENED SECURELY TO FENCE POSTS WITH WIRE TIES OR STAPLES. POSTS SHALL BE STEEL EITHER "T" OR "U" TYPE OR HARDWOOD.
2. FILTER CLOTH TO BE TO BE FASTENED SECURELY TO WOVEN WIRE FENCE WITH TIES SPACED EVERY 10' AT TOP AND MID SECTION. FENCE SHALL BE WOVEN WIRE, 12 1/2 GAUGE, 6" MAXIMUM MESH OPENING.
3. WHEN TWO SECTIONS OF FILTER CLOTH ADJOIN EACH OTHER THEY SHALL BE OVERLAPPED BY SIX INCHES AND FOLDED. FILTER CLOTH SHALL BE EITHER FILTER X, MIRAFI 100X, STABILINKA T140N, OR APPROVED EQUIVALENT.
4. PREFABRICATED UNITS SHALL BE GEOFAB, ENVIROFENCE, OR APPROVED EQUIVALENT.
5. MAINTENANCE SHALL BE PERFORMED AS NEEDED AND MATERIAL REMOVED WHEN "BULGES" DEVELOP IN THE SILT FENCE.

SILT FENCE

N.T.S.

BASED ON NEW YORK GUIDELINES FOR URBAN EROSION & SEDIMENT CONTROL.

APPROVED: PLANNING BOARD 1/13/2010 DATE	CITY OF SARATOGA SPRINGS, NEW YORK STANDARD DETAIL Silt Fence	DWG No ST-13

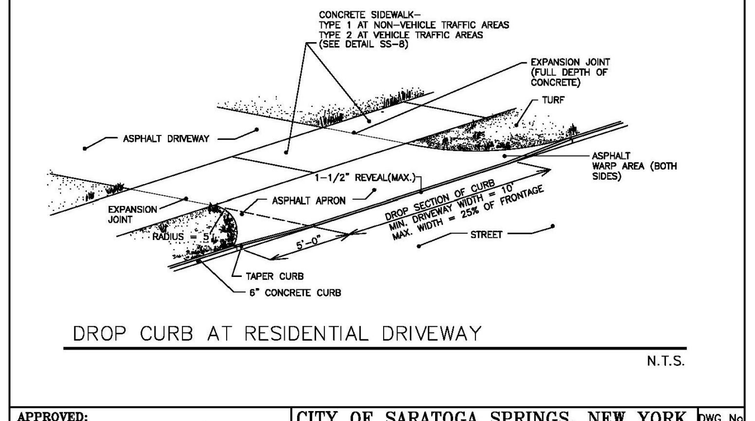

DROP CURB AT RESIDENTIAL DRIVEWAY

N.T.S.

APPROVED: PLANNING BOARD 1/13/2010 DATE	CITY OF SARATOGA SPRINGS, NEW YORK STANDARD DETAIL Type 1 Driveway (Residential)	DWG No SS-12

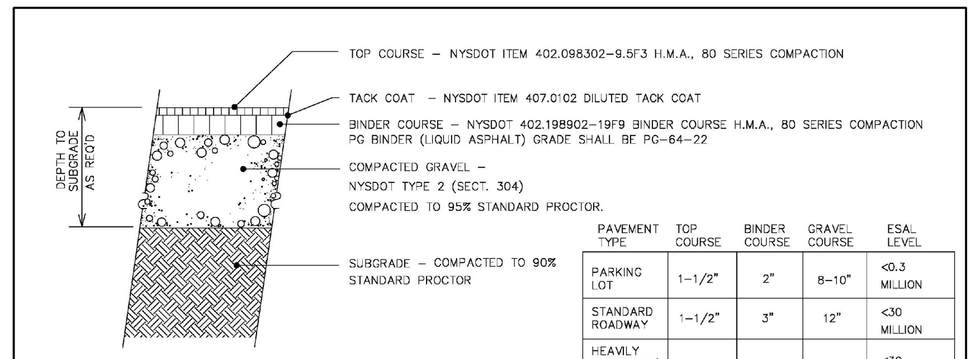

PAVEMENT TYPE	TOP COURSE	BINDER COURSE	GRAVEL COURSE	ESAL LEVEL
PARKING LOT	1-1/2"	2"	8-10"	<0.3 MILLION
STANDARD ROADWAY	1-1/2"	3"	12"	<30 MILLION
HEAVILY TRAVELED/ TRUCK LOADING	2"	* 4"	12"	<30 MILLION

* SEE NOTE 2

NOTES:

1. PAVEMENT SECTIONS SPECIFIED ARE TYPICAL FOR STREET, DRIVEWAY AND PARKING LOT CONSTRUCTION WHERE TRAFFIC VOLUMES AND LOADINGS ARE NOT EXCESSIVE. BASED ON ANTICIPATED VOLUMES AND LOADS, THE CITY ENGINEER MAY REQUIRE STRUCTURAL PAVEMENT SECTION TO BE INCREASED TO CARRY DESIGN LOADING.
2. BINDER TO BE PLACED IN 2 - 2" LIFTS W/ TACK COAT BETWEEN.
3. THE CITY ENGINEER MAY REQUIRE COMPACTION TESTING AND/OR CORE SAMPLES TO VERIFY PAVEMENT THICKNESSES. ALL TESTING SHALL BE AS ORDERED BY THE CITY ENGINEER AND SHALL BE PAID FOR BY THE CONTRACTOR.
4. NOTIFY THE CITY ENGINEER 48 HOURS MINIMUM PRIOR TO COMMENCING PAVING OPERATIONS..

ASPHALT PAVEMENT

N.T.S.

APPROVED: PLANNING BOARD 4/10/2013 DATE	CITY OF SARATOGA SPRINGS, NEW YORK STANDARD DETAIL Asphalt Pavement	DWG No SS-5

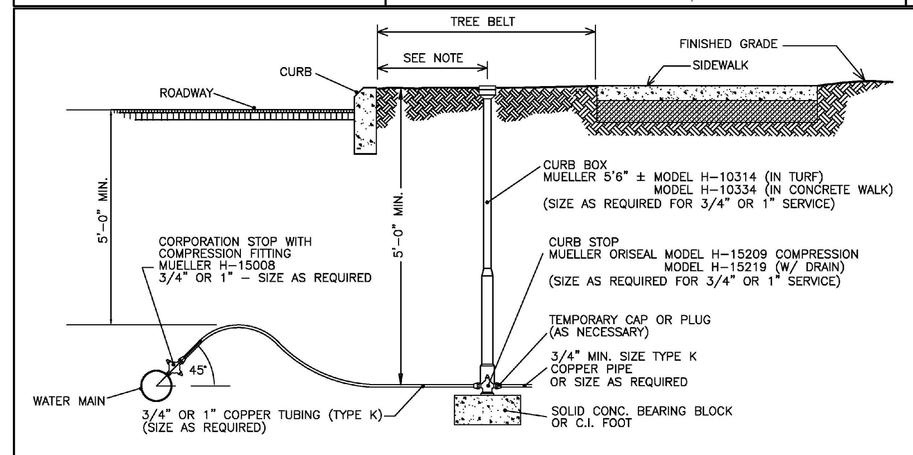

NOTE: LOCATE CURB BOX BETWEEN CURB AND SIDEWALK AT CENTER OF TREE BELT. WHERE NO CURB/TREE BELT IS PRESENT INSTALL CURB BOX AT PROPERTY LINE.

WATER SERVICE

N.T.S.

APPROVED: PLANNING BOARD 1/13/2010 DATE	CITY OF SARATOGA SPRINGS, NEW YORK STANDARD DETAIL Water Service	DWG No W-2

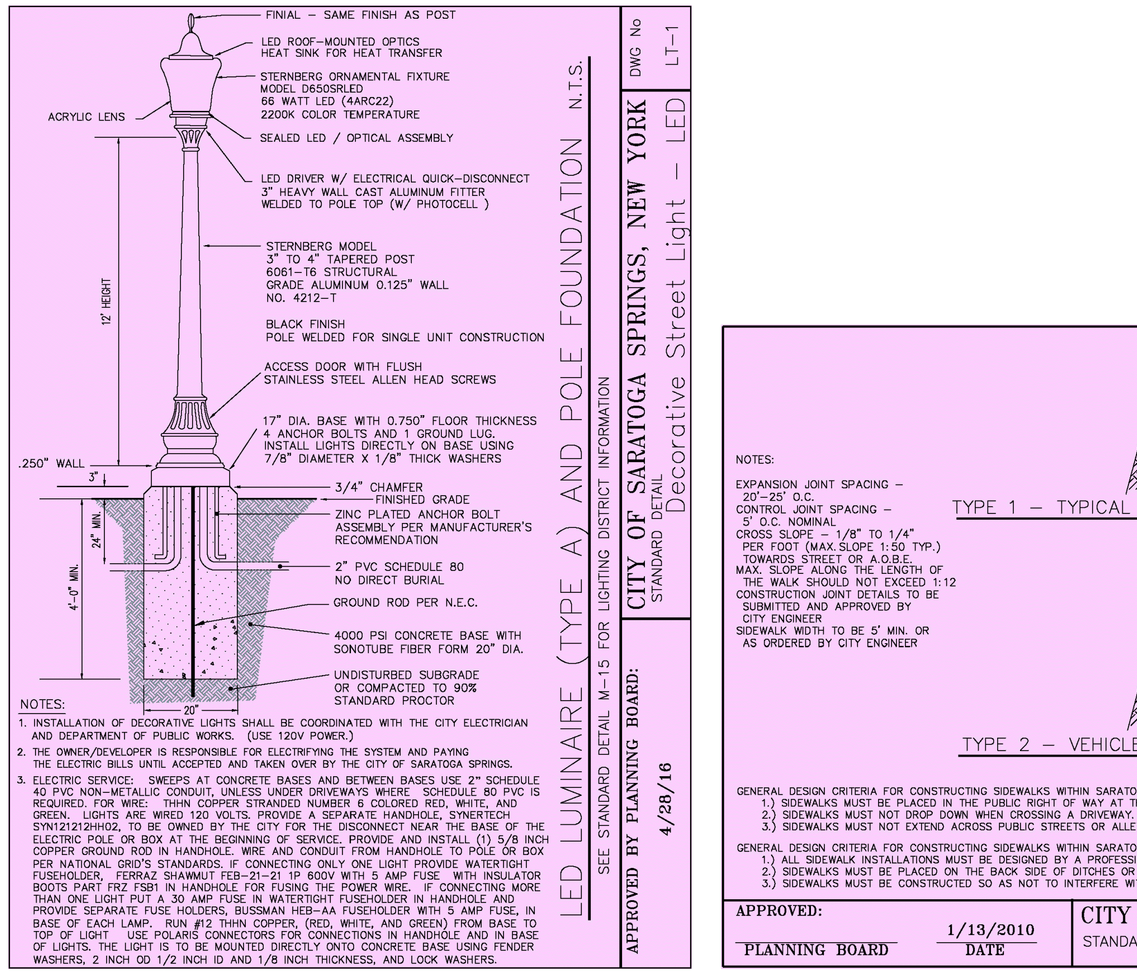

NOTES:

1. INSTALLATION OF DECORATIVE LIGHTS SHALL BE COORDINATED WITH THE CITY ELECTRICIAN AND DEPARTMENT OF PUBLIC WORKS. (USE 120V POWER.)
2. THE OWNER/DEVELOPER IS RESPONSIBLE FOR ELECTRIFYING THE SYSTEM AND PAYING THE ELECTRIC BILLS UNTIL ACCEPTED AND TAKEN OVER BY THE CITY OF SARATOGA SPRINGS.
3. ELECTRIC SERVICE: SWEEPS AT CONCRETE BASES AND BETWEEN BASES USE 2" SCHEDULE 40 PVC NON-METALLIC CONDUIT, UNLESS UNDER DRIVEWAYS WHERE SCHEDULE 80 PVC IS REQUIRED. FOR WIRE: THHN COPPER STRANDED NUMBER 6 COLORED RED, WHITE, AND GREEN. LIGHTS ARE WIRED 120 VOLTS. PROVIDE A SEPARATE HANDHOLE, SYNERTECH SYN121212HHO2, TO BE OWNED BY THE CITY FOR THE DISCONNECT NEAR THE BASE OF THE ELECTRIC POLE OR BOX AT THE BEGINNING OF SERVICE. PROVIDE AND INSTALL (1) 5/8 INCH COPPER GROUND ROD IN HANDHOLE. WIRE AND CONDUIT FROM HANDHOLE TO POLE OR BOX PER NATIONAL GRID'S STANDARDS. IF CONNECTING ONLY ONE LIGHT PROVIDE WATERTIGHT FUSEHOLDER, FERRAZ SHAWMUT FEB-21-21 1P 600V WITH 5 AMP FUSE WITH INSULATOR BOOTS PART FRZ FSB1 IN HANDHOLE FOR FUSING THE POWER WIRE. IF CONNECTING MORE THAN ONE LIGHT PUT A 30 AMP FUSE IN WATERTIGHT FUSEHOLDER IN HANDHOLE AND PROVIDE SEPARATE FUSE HOLDERS, BUSSMAN HEB-AA FUSEHOLDER WITH 5 AMP FUSE, IN BASE OF EACH LAMP. RUN #12 THHN COPPER, (RED, WHITE, AND GREEN) FROM BASE TO TOP OF LIGHT. USE POLARIS CONNECTORS FOR CONNECTIONS IN HANDHOLE AND IN BASE OF LIGHTS. THE LIGHT IS TO BE MOUNTED DIRECTLY ONTO CONCRETE BASE USING FENDER WASHERS, 2 INCH OD 1/2 INCH ID AND 1/8 INCH THICKNESS, AND LOCK WASHERS.

LED LUMINAIRE (TYPE A) AND POLE FOUNDATION

N.T.S.

SEE STANDARD DETAIL M-15 FOR LIGHTING DISTRICT INFORMATION

APPROVED BY PLANNING BOARD: 4/28/16

CITY OF SARATOGA SPRINGS, NEW YORK STANDARD DETAIL Decorative Street Light - LED	DWG No LT-1

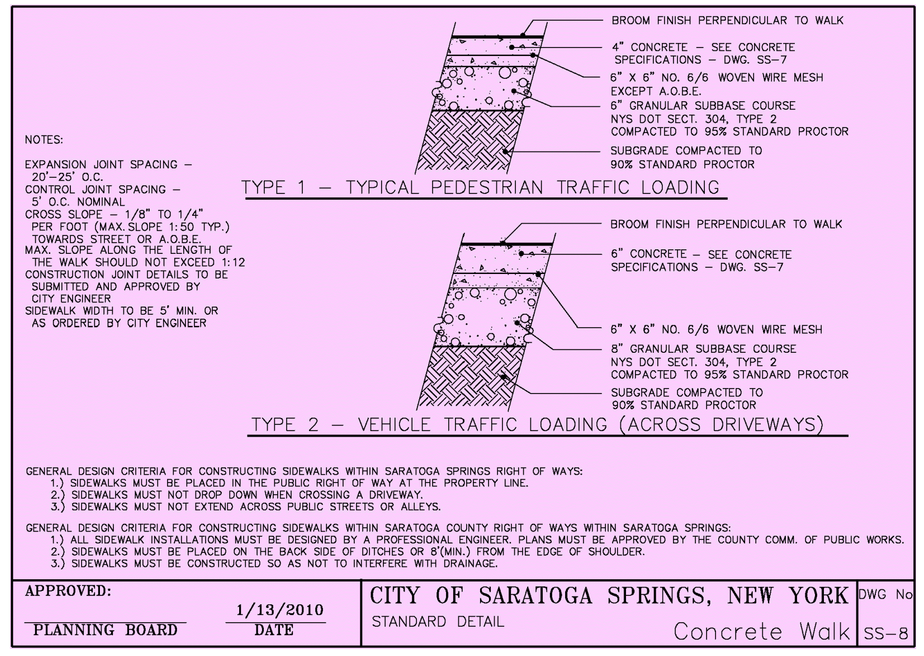

TYPE 1 - TYPICAL PEDESTRIAN TRAFFIC LOADING

NOTES:

EXPANSION JOINT SPACING - 20'-25' O.C. CONTROL JOINT SPACING - 5' O.C. NOMINAL CROSS SLOPE - 1/8" TO 1/4" PER FOOT (MAX.SLOPE 1:50 TYP.) TOWARDS STREET OR A.O.B.E. MAX. SLOPE ALONG THE LENGTH OF THE WALK SHOULD NOT EXCEED 1:12 CONSTRUCTION JOINT DETAILS TO BE SUBMITTED AND APPROVED BY CITY ENGINEER SIDEWALK WIDTH TO BE 5' MIN. OR AS ORDERED BY CITY ENGINEER

TYPE 2 - VEHICLE TRAFFIC LOADING (ACROSS DRIVEWAYS)

GENERAL DESIGN CRITERIA FOR CONSTRUCTING SIDEWALKS WITHIN SARATOGA SPRINGS RIGHT OF WAYS:
1.) SIDEWALKS MUST BE PLACED IN THE PUBLIC RIGHT OF WAY AT THE PROPERTY LINE.
2.) SIDEWALKS MUST NOT DROP DOWN WHEN CROSSING A DRIVEWAY.
3.) SIDEWALKS MUST NOT EXTEND ACROSS PUBLIC STREETS OR ALLEYS.

GENERAL DESIGN CRITERIA FOR CONSTRUCTING SIDEWALKS WITHIN SARATOGA COUNTY RIGHT OF WAYS WITHIN SARATOGA SPRINGS:
1.) ALL SIDEWALK INSTALLATIONS MUST BE DESIGNED BY A PROFESSIONAL ENGINEER. PLANS MUST BE APPROVED BY THE COUNTY COMM. OF PUBLIC WORKS.
2.) SIDEWALKS MUST BE PLACED ON THE BACK SIDE OF DITCHES OR 8'(MIN.) FROM THE EDGE OF SHOULDER.
3.) SIDEWALKS MUST BE CONSTRUCTED SO AS NOT TO INTERFERE WITH DRAINAGE.

APPROVED: PLANNING BOARD 1/13/2010 DATE	CITY OF SARATOGA SPRINGS, NEW YORK STANDARD DETAIL Concrete Walk	DWG No SS-8

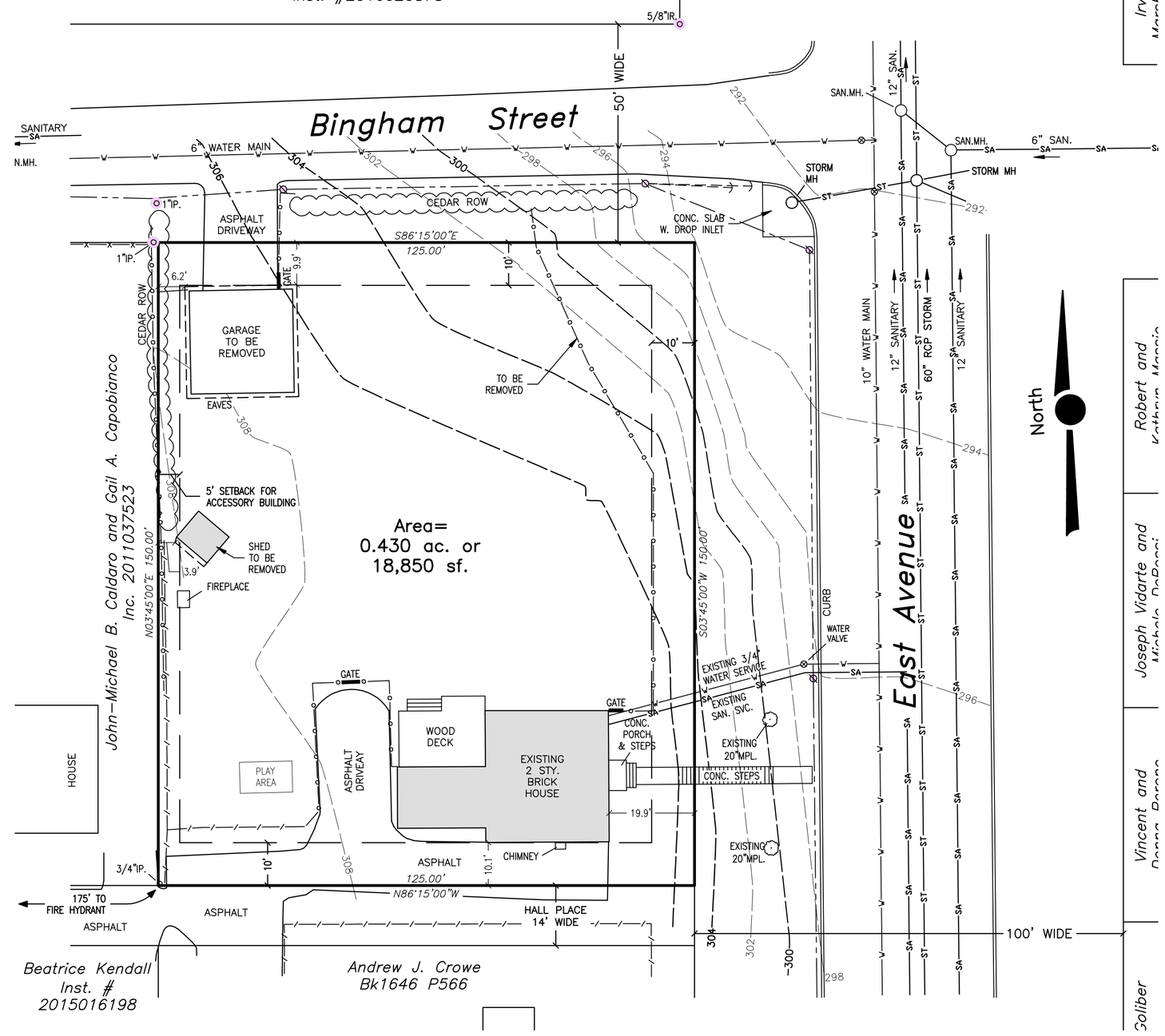

EXISTING CONDITIONS PLAN

1" =20'

Map Legend

- 5/8" steel rod set with a tag
- marker found, labeled
- utility pole
- water valve
- overhead wires
- wood fence
- chain-link fence

Approved under authority of a resolution adopted _____ by the Planning Board of the City of Saratoga Springs.

_____ _____
Chairperson Date Signed

PLANNING BOARD #

Unauthorized alteration or addition to a survey map bearing a licensed Land Surveyor's Seal is a violation of Section 7209 subdivision 2 of the New York State Education Law.

Only apparent easements (if any) are shown on this survey. No abstract of title was available.

Subdivision for Albert and Nicole Zumpano

Situate at 119 East Avenue City of Saratoga Springs, Saratoga County NY

THOMPSON FLEMING LAND SURVEYORS, P.C.
12 Lake Avenue Saratoga Springs NY 12866
Voice: (518) 587-5665 Fax : (518) 587-5772

DATE	DESCRIPTION
REVISIONS	
DATE:	July 14, 2016
JOB NO.:	S16-157.24
DRAWN BY:	DES
CHKD.BY:	WMT
TAX MAP:	166.38-1-16

SCALE: 1" = 20'
10 0 10 20

S2

S16-157.24

P:\Zumpano, 119 East Ave S16-157\dwg\S16-157 Zumpano.dwg

CITY OF SARATOGA SPRINGS

OFFICE OF THE MAYOR

City Hall - 474 Broadway
Saratoga Springs, New York 12866-2296
Tel: 518-587-3550 fax: 518-587-1688
http://www.saratoga-springs.org

[FOR OFFICE USE]

_____ (Application #)

_____ (Date received)

PETITION FOR: ZONING AMENDMENT

(Rev: 1/2016)

1. Name of Petitioner: Two Gilbert Corner, LLC

2. Type of Amendment (Map or Text):

☒ Map Amendment:

Site Location: 655 Crescent Avenu Tax Parcel #: 180.69-2-20

Current Zoning: Rural Residential Proposed Zoning: Portion Zone BB Interlaken PUD

Reason for amendment:

The property is presently derelict and inconsistent with Waterview Drive neighborhood. The inclusion of this land in the Interlaken PUD Zone BB will complete the streetscape of the neighborhood.

☒ Text Amendment:

Section to be amended: Appendix C: 2 Interlaken Planned Unit Development

Proposed wording of text amendment (attach additional sheets if necessary):

See attached proposed amendment to the Planned Unit Development Legislation for the "Interlaken Planned Unit Development".

Reason for amendment:

To complete the streetscape of Waterview Drive at its northerly entrance onto Crescent Avenue by subdividing Tax Parcel 180.69-2-20 into 4 conforming single family lots and having those lots incorporated into the PUD.

3. Professional Representing Applicant (if any):

Name: Michael J. Toohey, Esq. Phone: [redacted]

Address: P. O. Box 4367, 160 West Avenue Email: [redacted]

Saratoga Springs, New York 12866

Identify primary contact person: ☐ Applicant ☐ Owner ☒ Agent

4. Does any City officer, employee or family member thereof have a financial interest (as defined by General Municipal Law Section 809) in this application? YES ☐ NO ☑. **IF YES**, a statement disclosing the name, residence, nature and extent of this interest must be filed with this application.

Please check the following to affirm information is included with submission.

☒ Environmental Assessment Form - All petitions must include a completed SEQR Short or Long Form. SEQR forms can be completed at http://www.dec.ny.gov/permits/6191.html.

☒ Petition Fee: $700.00 plus $100/acre Total $ 800.00

A check for the total amount payable to: "Commissioner of Finance" must accompany this petition.

☒ Submit **10 copies, and one electronic copy (PDF)** of complete petition and all attachments.

☒ Location map (Map Amendment): Submit (4) large scale 24" x 36", and (10) 11"x17" copies.

All completed petitions are to be submitted to **the Office of the Mayor for consideration.**

I, the undersigned owner or purchaser under contract for the property, hereby request zoning amendment approval by the City Council for the above petition. I agree to meet all requirements under Section 240-10.0 of the Zoning Ordinance for the City of Saratoga Springs.

Furthermore, I hereby authorize members of the City Council, Planning Board and designated City staff to enter the property associated with this petition for purposes of conducting any necessary site inspections relating to this petition.

Applicant Signature: William J. Morris Date: 7/26/2016
Name: Two Gilbert Corner, LLC Phone: [redacted]
Address: 2 Gilbert Road E-mail: [redacted]
Saratoga Springs, New York 12866

If applicant is not currently the owner, the owner must sign.
Owner Signature: William J. Morris Date: 7/26/16
Print Name: William J. Morris

Short Environmental Assessment Form
Part 1 - Project Information

Instructions for Completing

Part 1 - Project Information. The applicant or project sponsor is responsible for the completion of Part 1. Responses become part of the application for approval or funding, are subject to public review, and may be subject to further verification. Complete Part 1 based on information currently available. If additional research or investigation would be needed to fully respond to any item, please answer as thoroughly as possible based on current information.

Complete all items in Part 1. You may also provide any additional information which you believe will be needed by or useful to the lead agency; attach additional pages as necessary to supplement any item.

Part 1 - Project and Sponsor Information

Name of Action or Project:
Expansion Zone BB Interlaken Planned Unit Development

Project Location (describe, and attach a location map):
655 Crescent Avenue, Saratoga Springs, Tax Parcel 180.69-2-20

Brief Description of Proposed Action:
The subdivision of the existing 1.1 acre parcel of land into 4 residential parcels and then the inclusion of those 4 parcels into Zone BB of the Interlaken Planned Unit Development

Name of Applicant or Sponsor:	Telephone: [redacted]
Two Gilbert Corner, LLC	E-Mail: [redacted]

Address:
2 Gilbert Road

City/PO:	State:	Zip Code:
Saratoga Springs	NY	12866

	NO	YES
1. Does the proposed action only involve the legislative adoption of a plan, local law, ordinance, administrative rule, or regulation? If Yes, attach a narrative description of the intent of the proposed action and the environmental resources that may be affected in the municipality and proceed to Part 2. If no, continue to question 2.	☑	☐
2. Does the proposed action require a permit, approval or funding from any other governmental Agency? If Yes, list agency(s) name and permit or approval: City Council, City of Saratoga Springs, New York; Planning Board, City of Saratoga Springs, New York	☐	☑

3.a. Total acreage of the site of the proposed action? 1.1 acres
b. Total acreage to be physically disturbed? 0 acres
c. Total acreage (project site and any contiguous properties) owned or controlled by the applicant or project sponsor? 1.1 acres

4. Check all land uses that occur on, adjoining and near the proposed action.
☐ Urban ☑ Rural (non-agriculture) ☐ Industrial ☐ Commercial ☑ Residential (suburban)
☐ Forest ☐ Agriculture ☐ Aquatic ☐ Other (specify): _____
☐ Parkland

	NO	YES	N/A
5. Is the proposed action, a. A permitted use under the zoning regulations?	☑	☐	☐
b. Consistent with the adopted comprehensive plan?	☐	☑	☐
6. Is the proposed action consistent with the predominant character of the existing built or natural landscape?	NO	YES	
	☐	☑	
7. Is the site of the proposed action located in, or does it adjoin, a state listed Critical Environmental Area? If Yes, identify: _____	NO	YES	
	☑	☐	
8. a. Will the proposed action result in a substantial increase in traffic above present levels?	NO	YES	
	☑	☐	
b. Are public transportation service(s) available at or near the site of the proposed action?	☑	☐	
c. Are any pedestrian accommodations or bicycle routes available on or near site of the proposed action?	☐	☑	
9. Does the proposed action meet or exceed the state energy code requirements? If the proposed action will exceed requirements, describe design features and technologies:	NO	YES	
	☑	☐	
10. Will the proposed action connect to an existing public/private water supply?	NO	YES	
If No, describe method for providing potable water: _____	☐	☑	
11. Will the proposed action connect to existing wastewater utilities?	NO	YES	
If No, describe method for providing wastewater treatment: _____	☐	☑	
12. a. Does the site contain a structure that is listed on either the State or National Register of Historic Places?	NO	YES	
	☑	☐	
b. Is the proposed action located in an archeological sensitive area?	☑	☐	
13. a. Does any portion of the site of the proposed action, or lands adjoining the proposed action, contain wetlands or other waterbodies regulated by a federal, state or local agency?	NO	YES	
	☑	☐	
b. Would the proposed action physically alter, or encroach into, any existing wetland or waterbody? If Yes, identify the wetland or waterbody and extent of alterations in square feet or acres: _____	☑	☐	

14. Identify the typical habitat types that occur on, or are likely to be found on the project site. Check all that apply:

☐ Shoreline ☐ Forest ☐ Agricultural/grasslands ☐ Early mid-successional
☐ Wetland ☐ Urban ☑ Suburban

	NO	YES
15. Does the site of the proposed action contain any species of animal, or associated habitats, listed by the State or Federal government as threatened or endangered?	☑	☐
16. Is the project site located in the 100 year flood plain?	☑	☐
17. Will the proposed action create storm water discharge, either from point or non-point sources? If Yes, a. Will storm water discharges flow to adjacent properties? ☐ NO ☐ YES	☑	☐
b. Will storm water discharges be directed to established conveyance systems (runoff and storm drains)? If Yes, briefly describe: ☐ NO ☐ YES		

	NO	YES
18. Does the proposed action include construction or other activities that result in the impoundment of water or other liquids (e.g. retention pond, waste lagoon, dam)? If Yes, explain purpose and size:	✓	
19. Has the site of the proposed action or an adjoining property been the location of an active or closed solid waste management facility? If Yes, describe:	✓	
20. Has the site of the proposed action or an adjoining property been the subject of remediation (ongoing or completed) for hazardous waste? If Yes, describe:	✓	

I AFFIRM THAT THE INFORMATION PROVIDED ABOVE IS TRUE AND ACCURATE TO THE BEST OF MY KNOWLEDGE

Applicant/sponsor name: Two Gilbert Corner, LLC Date: 7/26/2016

Signature: Weller J. Mein

PRINT FORM

Narrative
Inclusion of a Four Lot Subdivision
Zone BB Interlaken Planned Unit Development

The Interlaken Planned Unit Development, located in the eastern portion of Saratoga Springs, in the Union Avenue, Crescent Avenue area of the City has, over the course of time, been developed in accordance with the legislation that has been approved and amended by the City Council of the City of Saratoga Springs, and has been subject to Planned Unit Site Plan Approval by the Planning Board of the City of Saratoga Springs.

In March of 1997, an expansion of the Planned Unit Development was approved by the City Council and Designated Interlaken Zone BB. Thereafter, by Resolution of the Planning Board of the City of Saratoga Springs on May 7, 1997, PUD Site Plan approval was granted for a thirty (30) lot residential subdivision extending in a general westerly direction from Crescent Avenue and consisting of all of the lots on the easterly portion of Waterview Drive and all of Campion Lane. What was not included in this new Zone BB was the parcel of land located on the northeast corner of the intersection of Crescent Avenue and the then newly developed Waterview Drive. The parcel in question is listed as 655 Crescent Avenue, being City of Saratoga Springs Tax Parcel 180.69-2-20 (the "Property").

This 1.15 acre parcel is 130.57 ft on the west side of Crescent Avenue and 364.11 ft along the north boundary of Waterview Drive. There presently exists on the property a vacant dilapidated residential structure on the easterly end of the site with two driveway entrances on Crescent Avenue. An engineering analysis of the existing structure has determined that it is not salvageable and a Demolition Permit for it to be removed has been issued by the City of Saratoga Springs.

Existing Neighborhood

All of the structures in Zone BB consistent with the PUD Legislation, are residential in nature, and are allowed a detached or attached one bedroom unit consisting of no more than 800 sq ft Pursuant to the existing Planned Unit Development code the lots in Zone BB of the Planned Unit Development, must be at least ten thousand square feet (10,000 sq ft).

The existing 8 lots of the north side of Waterview Drive have an average street frontage of 80.00 ft. that being the the minimum mean width for lots within Zone BB according to the PUD Legislation.

Land To Be Added

The Applicant wishes to subdivide the 1.15 acres of land into 4 residential parcels which in all ways will be controlled by the use, lot size, mean width, setback, building height requirements that already existing in the Zone BB Legislation and within this neighborhood.

The proposed lots will all be PUD code compliant with an average square footage of 11,972 +/- sq ft and an average frontage on the north side of Waterview Drive of 91.03 ft.

2015 Comprehensive Plan

Within the 2015 Comprehensive Master Plan, the Property is located within the "Residential Neighborhood – 1 Zone" as show on the Comprehensive Plan Map. According to the text of the Comprehensive Master Plan (p.58), that Zone allows a maximum density of 3.5 Units/Acre. As specified in the City Assessor's records and the City Tax Map, the Property is 1.15 acres and, as a result, according to the Comprehensive Master Plan, the units can be created from the Property.

Neighborhood Approval

The Applicant, prior to bringing this Application to the City Council, held a neighborhood meeting to introduce the concept that the Property would be subdivided into four (4) residential parcels under all of the requirements of the existing PUD restrictions. That meeting was very well attended and the vast majority in attendance were in favor of this plan that would complete the Waterview Drive northern streetscape and eliminate the structure that is an eye soar to anyone entering the neighborhood from Crescent Avenue.

Infrastructure

As required with the Planned Unit Development Legislation, the homes that will be built on these parcels will all be connected to existing public sanitary sewer and potable water lines that exist within Waterview Drive.

Existing Residential Lots
North Side of Waterview Drive
Zone BB

Address	Tax Parcel	Street Frontage
57 Waterview Drive	180.69-2-3	78.61 ft
59 Waterview Drive	180.69-2-4	78.85 ft
61 Waterview Drive	180.69-2-5	79.01 ft
63 Waterview Drive	180.69-2-6	79.09 ft
65 Waterview Drive	180.69-2-7	96.91 ft
53 Waterview Drive	180.69-2-1	76 ft
55 Waterview Drive	180.61-2-14	76.38 ft
		564.85/7 = 80.70 ft

Proposed Lots Square Footage

1	12,371 sq ft
2	10,339 sq ft
3	10,339 sq ft
4	14,840 sq ft
	47,849/4 = 11,972.25 sq ft

Proposed Mean Width

1	80 ft
2	80 ft
3	80 ft
4	124.11 ft
	364.11/4 = 91.03 ft