CITY OF SARATOGA SPRINGS
DESIGN REVIEW COMMISSION

City Hall - 474 Broadway
Saratoga Springs, New York 12866
Tel: 518-587-3550 fax: 518-580-9480
www.saratoga-springs.org

Steven Rowland, *Chair*
Tamie Ehinger, *Vice Chair*
Richard Martin
Karen Cavotta
Cynthia Corbett
Leslie DiCarlo
Chris Bennett
Robert West, *Alternate*

Design Review Commission Meeting – Wednesday, October 5, 2016

City Council Room – 7:00 P.M.

Salute to the Flag

A. 6:00 PM **Discussion**

1. Unified Development Ordinance Zoning Diagnostic Report

   Documents:

   16_0829-ZONING_DIAGNOSTIC_FINAL-DRAFT2.PDF

B. 7:00 PM **DRC Applications under Consideration**

1. 2016.068 James & Sons Tobacconists Sign
   360 Broadway, Historic Review of a wall sign within the Transect-6 Urban Core District.

   Documents:

   2016.068 JAMESSONSTOBACCOSIGN_APP_REDACTED.PDF

2. 2016.047.1 Carpe Diem Signage
   489 Broadway, Historic Review of a wall sign within the Transect-6 Urban Core District.

   Documents:

   2016.047.1 CARPEDIEMSIGNAGE_489 BROADWAY_REDACTED.PDF

3. 2016.065 Allstate Wall Sign
   133 Ballston Ave, Architectural Review of a wall sign within the Highway General Business District.

   Documents:

   2016.065 ALLSTATEWALLSIGN_APP_REDACTED.PDF

4. 2016.066 Presbyterian Congregation Solar Panels
   24 Circular Street, Historic Review of a roof-mounted solar panels within the Urban Residential-2 District.

   Documents:

   2016.066 PRESBYTERIANCONGREGATIONSOLAR_APP_REDACTED.PDF
   2016.066 PRESBYTERIANCONGREGATIONSOLAR_ROOFRENDER.PDF

5. 2013.102.1 30 Gick Road Building Façade Modification
   30 Gick Rd, Architectural Review of façade improvements within the Transect-4 Urban Neighborhood District.

   Documents:

   2013.102.1 KWANGPAI_APP_REDACTED1.PDF

6. 2014.079.1 City Center Parking Structure
   Maple and High Rock avenues, Architectural Review of a multi-level parking structure within the Transect-6 Urban Core District.

   Documents:

   2014.079.1 CITYCENTERGARAGE_REVISEDLOBBYDESIGN9-13-16.PDF

7. 2016.046 246 West Ave Apartments Advisory Opinion to PB
   Advisory Opinion (Architectural Review) to Planning Board of a 3-story, 16-unit apartment building within the Transect-4 Urban Neighborhood District.

   Documents:

   2016.046 WESTAVEMIXEDDEVELOPMENT_APP_REDACTED.PDF
   2016.046 WESTAVEMIXEDDEVELOPMENT_UPDATESRECVD9-23-16_REDACTED.PDF

C. Approve Meeting Minutes:

D. Upcoming Meeting(s):
October 19, 2016 (Caravan: Tuesday, October 11, 2016 at 5:00 pm)
November 2, 2016 (Caravan: Tuesday, October 25, 2016 at 5:00 pm)

NOTE: This agenda is subject to change. Please check www.saratoga-springs.org for latest version.

Zoning Diagnostic Report

In preparation for the

Unified Development Ordinance

City of Saratoga Springs, New York

AUGUST 29, 2016

PREPARED BY THE CITY OF SARATOGA SPRINGS

IN ASSOCIATION WITH:

BEHAN PLANNING AND DESIGN

112 Spring Street, Suite 305
Saratoga Springs, NY 12866

151 South Main Street, Suite 200
New City, NY 10956

www.behanplanning.com

Project Support

The project is part of Governor Andrew M. Cuomo's Cleaner, Greener Communities program, a major statewide initiative encouraging communities to incorporate sustainability goals and principles into local decision-making, and then form partnerships to transform markets that lead to the reduction of emissions and the generation of economic development benefits. The program, administered by the New York State Energy Research and Development Authority (NYSERDA), also empowers communities to take action, providing technical resources and decision-making tools on land use, housing, transportation, energy, economic development and environmental practices, resulting in a more vibrant and prosperous New York.

Cleaner, Greener Communities is funded through the Regional Greenhouse Gas Initiative (RGGI), the nation's first market-based regulatory program in the United States to reduce greenhouse gas emissions. RGGI is a cooperative effort among the states of Connecticut, Delaware, Maine, Maryland, Massachusetts, New Hampshire, New York, Rhode Island, and Vermont to cap and reduce CO2 emissions from the power sector.

Table of Contents

Part 1 - Introduction 4

Background 4

Introduction & Purpose 5

Unified Development Ordinance—A User-Friendly Approach 6

Process Overview 7

Highlights of the Listening and Understanding Stage - Working with Our Citizens 9

Part 2 - Summary of Key Themes 11

Economic Development 11

Housing Options 14

Neighborhood/Community Character 16

Streetscapes, Parks and the Public Realm 19

Review of Zoning Districts / Map 25

Process Improvements 28

Sustainability, Resiliency, and the Environment 31

PART 3 – Analysis of Zoning Ordinance, Adopted Plans and Policies, and Additional Studies 36

Zoning Ordinance Analysis 36

2014 Saratoga Greenbelt Trail Plan 44

2013 Urban and Community Forest Master Plan 45

2012 Complete Streets Policy 47

2006 Building Heights Study 48

2002 Open Space Plan 49

2001 A Working Plan for Historic Preservation 51

Conclusion 54

Final Thoughts and Next Steps 54

Part 1 - Introduction

Background

The City of Saratoga Springs has emerged as one New York's most vibrant and successful small cities. While "health, history, and horses" has long been its mantra, the city has become so much more than that following a period of robust regional growth. With its refreshing mineral spas, award-winning main street, and a flourishing arts and culture scene, the Spa City has gained a reputation throughout New York and across the country as an exceptional place to live, visit, and do business.

This vibrancy is due in no small part to the fact that many people and a wide range of organizations have been successful in engendering a kind of growth that strategically focuses economic activity in the urban core, sustains the safety and character of the city's diverse neighborhoods, and preserves open lands in rural area. This vision, reaffirmed in the city's 2015 Comprehensive Plan, is the bedrock on which the city's zoning and economic development policies are built upon.

Thoughtful planning for the future has been an integral part of maintaining the city's vision for both development and conservation, now and in the past. The city adopted and implemented successful planning initiatives including the Saratoga Plan of Action that helped guide downtown revitalization in the 1970's, the Open Space Plan of 2002 that led to the successful open space bond referendum, and the comprehensive plans of the last twenty years. It is the goal of the Unified Development Ordinance (UDO) to continue this tradition of effective planning by establishing a unified zoning ordinance that actively and clearly coordinates city development and reservation policies and regulations to improve the overall quality of life for all citizens of Saratoga Springs.

Introduction & Purpose

The Unified Development Ordinance (UDO) will establish rules on the form, use, and character of development and preservation in Saratoga Springs. It will combine the city's Zoning Ordinance and Subdivision Regulations into a single, user-friendly document that aligns approval procedures, eliminates conflicts between related codes, and encourages high quality development.

This effort – funded largely by the New York State Energy Research and Development Authority (NYSERDA) – is designed to encourage new development and renovation that helps move the community toward its goals of being a vibrant, attractive place to live, work and recreate with a diverse and viable local economy. The City has hired a local firm, Behan Planning and Design, to assist us in making this a reality.

The UDO provides Saratoga Springs an opportunity to update the city codes - including zoning, subdivision, stormwater and design regulations - and ensure that they are in conformance with the 2015 Comprehensive Plan. Such periodic updates are necessary and required by both New York State and city code.

New York Department of State: Guide to Planning and Zoning Laws Of New York State

"All city land use regulations must be in accordance with the (comprehensive) plan."

Section 1.4 of the existing Saratoga Springs zoning ordinance states: *"Any amendments to this chapter and all development approvals shall be consistent and in accordance with the adopted comprehensive plan. An amendment to this chapter, whether text or district boundary, is consistent and in accordance with the comprehensive plan if it complies with the goals, objectives, policies and strategies and any vision statement contained in the comprehensive plan."*

The comprehensive plan does not delve into excessive detail; instead, it provides a high-altitude perspective on the city's vision, guiding principles and establishes a map of future land use patterns.

The first public document, this Zoning Diagnostic Report, will become the "roadmap" for the drafting of the new Unified Development Ordinance, which will commence after City Council review of the Zoning Diagnostic Report.

The report focuses on summarizing major issues identified by the public, city staff, and Behan Planning and Design after the project initiation stage and an independent evaluation of the zoning ordinance and other relevant city regulations. It defines the basis or need for designing the UDO but does not prescribe or recommend the specific direction for the new ordinance.

Unified Development Ordinance—A User-Friendly Approach

Understanding how to navigate the development review rules and regulations can be daunting. As illustrated by the graphic below, a UDO combines traditional zoning and subdivision regulations, along with other development standards for items such as design guidelines, stormwater management, sign requirements and street standards into one, easy-to-read reference document.

A UDO is intended to streamline the review and approval process and clarify all requirements with clear illustrations for ease of understanding by the public, developers and city officials. It provides an excellent opportunity to integrate other adopted policies and plans into the city ordinance including the Saratoga Greenbelt Plan, Open Space Plan, Urban and Community Forest Master Plan and the Complete Streets Policy and Plan (under development). It can also address and implement energy efficiency and environmental sustainability objectives as set forth in the 2015 Comprehensive Plan.

One way to make regulations user-friendly is through the use of graphics, illustrations, photos, flowcharts, and tables. Graphics will be enhanced to make clear expectations both in terms of process and design. Flowcharts and summary tables are also very helpful in presenting information succinctly and eliminating repetition or inconsistent terminology. They can be used along with text in the procedures section of the regulations to graphically portray the process required for review of a specific type of development application. For example, the illustration below depicts the flow of a development project review process.

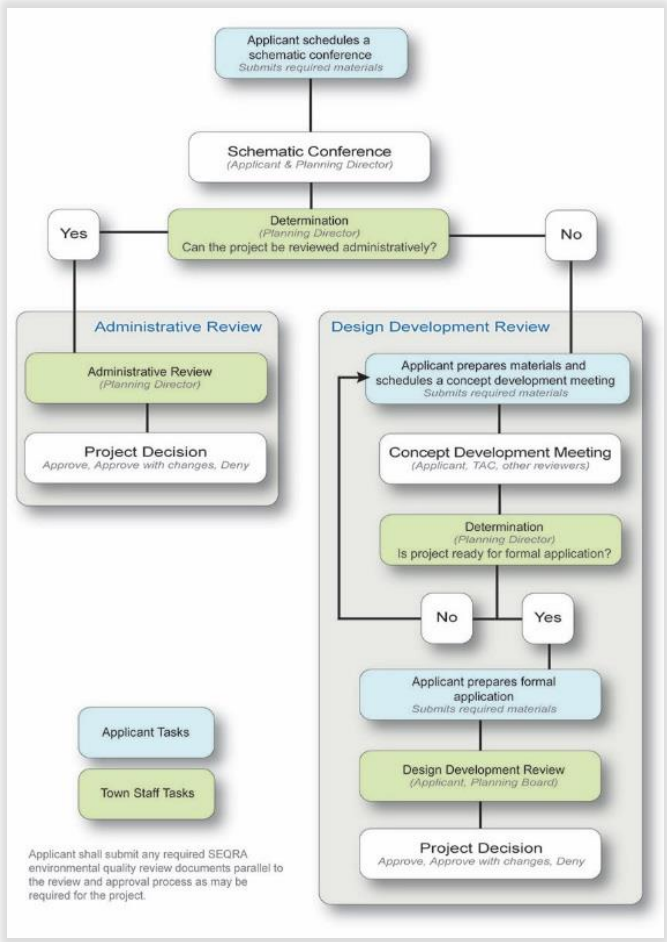

Sample Flow Chart. Process flow charts, such as the one shown above, can be used to help graphically illustrate the steps and procedures so they can be more easily understood by the applicant, reviewing boards and the public.

Process Overview

Updating the zoning ordinance and subdivision regulations is a significant undertaking. The work began in October of 2015 and was organized into the eleven project milestones shown below. The project initiation stage was conducted from October 2015 until March 2016. During that process, Behan Planning and Design conducted numerous interviews with the public and staff, hosted a community workshop, and met with the Zoning Board of Appeals and City Council members. Behan also set up a website for the project (www.saratogaspringsudo.com) which was used to introduce the work, advertise upcoming events and catalog all of the public comments received.

The following is a description of the major stages of the process:

- **Listening and Understanding**. Through a series of internal (City Council, City Staff, and Land Use Boards) and external (public) input or listening sessions (Community Workshop), evaluate and identify components, methods and techniques that can improve the readability, navigation, and understanding of regulations in the UDO.

- **Review of Documents.** Review the key ordinances, policies, and plans that have been developed, adopted, and/or implemented by the City of Saratoga Springs in the past 15 years. It is important

to note that while Behan reviewed all available planning and regulatory documents, for the purposes of this report they have focused only on those documents having specific relevance to the zoning and land development and preservation guidelines.

- **Diagnosis/Outline (this document).** Creation of a diagnostic report to provide a general overview of the current zoning ordinance and subdivision regulations and a proposed framework for a consolidated UDO. Behan Planning staff will present this report to City Council. Based on feedback to the report, the Behan team will then begin drafting the new UDO.

- **Initial Ordinance Draft (Staff and Public Review Drafts).** Given the length and complexity of the new UDO, the new ordinance will be drafted in four stages: draft outline of the UDO with subsequent public workshop, 50% draft complete, 75% draft complete, and 95% draft complete. The 95% completed draft will then be presented at a public workshop.

- **Final Ordinance Draft and Adoption Process.** Following the review of each of the four installments, a consolidated final draft will be prepared for review through the public hearing process.

Project Milestones

✓	Public Informational Meeting
✓	Analysis of Comp Plan and development codes
✓	Public Stakeholder Meetings
✓	Publish Zoning Diagnostic Report
	Publish Draft Outline of UDO
	Public Workshop (to be scheduled)
	50% Draft UDO published
	75% Draft UDO published
	95% Draft UDO and Public Presentation
	Planning Board / City Council Public Hearing
	Adoption

Highlights of the Listening and Understanding Stage - Working with Our Citizens

Input to the diagnostic report includes information gathered from the public and staff during the listening phase of the project, as well as the consultant's analysis of the text and structure of the existing ordinance. As part of the City's public information program, the City hosted a day-long workshop consisting of topic-related meeting slots to discuss our current land use ordinances and identify possible changes as part of the UDO project. Local residents, business owners and other interested members of the public were encouraged to sign up for a topic discussion slot.

Participants gather at tables at Empire State College to discuss various issues regarding the city zoning.

The workshop was set up in table discussion format where participants were invited to share their thoughts with members of the city staff and consulting team who helped facilitate the discussion and take notes. The meeting schedule was broken up into one-hour slots, devoted to general topics of interest. Those topics included:

- Development Review and Approval Process
- Energy, Sustainability, and the Environment
- Economic Development
- Housing Options
- Preservation
- Streetscapes, Parks and the Public Realm
- Neighborhood and Community Character
- Open Group Discussion (evening)

Public workshop discussion tables, February 4th, 2016.

Through all of these efforts, we collected numerous comments about what was working and what was perceived to need improvement in the current zoning ordinance. Several major themes and goals for the project emerged from the community workshop. While these themes often overlap, we have organized them into six general areas/topics for discussion purposes. To view the full 41-pages of meeting notes, refer to the project website: www.saratogaspringsudo.com

Part 2 - Summary of Key Themes

Based on the major issues that emerged during the initial public input phase of this project, this report presents seven key themes the city can consider to improve the organization and content of its development ordinance.

The focus of this diagnosis is on the zoning and subdivision regulations. Due to the interrelated nature of a number of these topics, some overlap between the analysis of current regulations and recommendations may occur between topics. We have retained this redundancy to ensure that each topic may be reviewed independently, if desired.

Key Themes

- Economic Development
- Housing Options
- Neighborhood and Community Character
- Streetscape, Parks, and the Public Realm
- Review of Zoning Districts
- Process Improvements
- Sustainability, Resiliency, and the Environment

Economic Development

Background

2015 Comprehensive Plan

- *"To preserve and enhance a City that is economically strong and adequately diversified to withstand cyclical changes in the economy; that creates economic and employment opportunities for all of its citizens;*
- *To encourage development that benefits our tax base and is based on sustainable concepts;*
- *To maintain the balance of land uses, economic forces and social diversity. Downtown is the key to the City's economic health. Likewise, the City's open space resources constitute a vital economic component and valuable aesthetic and recreational amenity. It is the strength and preservation of these two distinct and unique attributes that assures Saratoga's continued success and sustainability."*

In the past two years, Saratoga Springs has won multiple awards: One of the 20 Best College Towns, One of the 10 Best Places to Retire, One of the Best Small Cities in NY, as one of the most Walk Friendly Communities in US. As the city moves forward into its second century as a city, it must sustain its growth and prosperity without compromising the unique character, historic buildings, and open space that have drawn new residents and businesses to relocate here and tourists to visit. Sustainable economic development must include the ability for the city to be able to continue to grow with an evolving tax base in order to support the financial demand and responsibilities that come with an increasing population.

To achieve a balance, zoning will need to be flexible and allow for the creation of emerging businesses and new opportunities while assuring the wise and timely development of new areas and redevelopment remains in harmony with the comprehensive plan. With our proximity to

growing technology manufacturing centers nearby, the city will need to ensure that it can accommodate new industrial and commercial growth and that the current quantity and location of commercially and industrially zoned sites is adequate and appropriate.

1. Transect Zones

a. **Issue:** The Transect Zones have limited as-of-right uses leading to unnecessary work for land use boards and increased cost for applicants.

   i. Potential Solution: Consider including some uses as Permitted or Permitted with Site Plan Approval.

b. **Issue:** The City has encountered difficulties in fulfilling two-story usable space intent.

   i. Potential Solution: Revise and clarify the intent and performance criteria of the minimum two-story requirement.

c. **Issue:** City needs to provide better clarification of mix of uses at a neighborhood and project level scale.

   i. Potential Solution: Revise intent of Transect Zones to clarify desire for a mix of complementary uses. Consider providing additional flexibility in some Transect zones to accommodate a mix of uses within a single development or property, not limited only to a mix within each building.

d. **Issue:** Current transitions between Transect and adjacent residential zones are abrupt and not graduated.

   i. Potential Solution: Incorporate layered transition zones which step-down from taller commercial districts when adjacent to smaller residential districts.

   ii. Potential Solution: Include more graphically-oriented design guidance.

e. **Issue:** There are challenges with current zoning regulations to ensure that development is harmonious with its surroundings, achieves appropriate height and density transitions, and protects neighborhood character.

   i. Potential Solution: Institute context-based review considerations into the design standards for Transect zones.

f. **Issue:** Current maximum height, build-to, build-out requirements have produced large uniform buildings where the objective was to have greater diversity in building type, layout, roof top and façade treatments.

   i. Potential Solution: Revise building height requirements to be based on number of stories instead of total number of feet to provide more height variations.

ii. Provide design guidance for Transect zones which requires massing of larger buildings to be visually defined by smaller scale elements.

2. Evaluate Zoning Districts

a. **Issue:** Underperformance and utilization of existing zones such as the Warehouse District.

   i. Potential Solution: Review and identify current zones that could be eliminated or replaced with more productive land-use options.

b. **Issue:** There is a need for certain districts to be modernized to reflect desired uses and to maximize economic development opportunities in areas such as Industrial (IND), Tourist Related Business (TRB), and Highway General Business (HGB).

   i. Potential Solution: Re-evaluate the uses and intent of TRB and HGB districts to better accommodate a variety of area appropriate uses.

   ii. Potential Solution: Review currently permitted uses in IND districts and identify emerging technology uses which could be added.

   iii. Potential Solution: Review current area, bulk, parking and other lot configuration requirements to identify options which could increase allowable building footprint area to help incentivize redevelopment.

3. Encourage Business Growth

a. **Issue:** City's current regulations may not sufficiently address home occupations and provide for preservation of neighborhood character.

   i. Potential Solution: Investigate additional performance standards and conditions by which home occupations may be permitted.

   ii. Potential Solution: Consider different "intensity levels" of home occupations which may be permitted in different zoning districts so as to provide greater protections in sensitive neighborhoods while providing more flexibility in rural, outlying areas.

b. **Issue:** City may not have sufficient language to define or provide guidance for home occupations and emerging workplaces.

   i. Potential Solution: Review the current restrictions on home occupation including use of accessory structures, number of workers, vehicles, signs, outdoor activity, hazardous material, utilities and services.

c. **Issue:** Small businesses often struggle with financing and capital to expand their businesses and upgrade facilities.

i. Potential Solution: Review current area, bulk, parking and other lot configuration requirements to identify options which could increase allowable building footprint area to help incentivize redevelopment or permit new additions.

ii. Potential Solution: Consider adoption of Property Assessed Financing (PACE) in order to facilitate commercial properties to make energy efficiency and renewable energy upgrades to buildings.

iii. Potential Solution: Evaluate 485b, the Business Investment Exemption, to encourage reconstruction in select portions of the City.

4. Signage

a. **Issue:** Current signage regulation may not be sufficiently flexible to serve business needs.

   i. Potential Solution: Revise sign regulations with a location specific focus to provide more "fine-grain" control and flexibility such as different sizes depending on where they are located.

b. **Issue:** Current sign regulations focus on retail/commercial advertising and may not be sufficient guidance for civic and cultural events/activities.

   i. Potential Solution: Provide for appropriate, creative sign options/alternatives for civic and cultural organizations and events (temporary signs (banners), off-site signage, etc.)

c. **Issue:** Businesses are not submitting sign packages early enough in the building review process.

   i. Potential Solution: Encourage applicants to incorporate sign package submittal into site and building project design.

Housing Options

Background

2015 Comprehensive Plan

- *"Encourage and increase housing diversity and affordability as well as neighborhood vitality;*
- *To preserve and enhance a City that is accessible and affordable to all income levels;*
- *To maintain a City that includes diverse housing opportunities for all economic levels throughout the City*."

In Saratoga Springs, 37.3 percent of households have an income below $50,000 according to the Capital District Regional Planning Commission. Household of four making at or less than $51,792 are considered low income. In Saratoga Springs, 63.9 percent of these low income homeowners and 67.9

percent of these renters are spending more than 30 percent of their annual income on housing. According to U.S. Department of Housing and Urban Development, families who pay more than 30 percent of their income for housing are considered cost burdened and may have difficulty affording necessities such as food, clothing, transportation and medical care.

Despite significant growth in the overall housing market, there is a shortage of affordable housing options. Expanding affordable and workforce housing will not only give families the ability to live in an economically thriving community close to employment opportunities and services but will also help Saratoga Springs sustain a vibrant economy, fill jobs, service visitors, and create diversity in our community.

5. Affordability and Diversity

a. **Issue:** City needs to elicit a greater range of housing types and economic levels to sustain a successful and economically vibrant community.

   i. Potential Solution: Consider incentives for integrating affordable housing into market-rate housing (i.e., not creating additional separate low/moderate income housing projects).

   ii. Potential Solution: Consider inclusionary zoning. Research inclusionary zoning requirements that have been successful in other communities.

b. **Issue:** Incentives for clustering and/or encouraging affordable housing have not been successful.

   i. Potential Solution: Consider Burlington, Vermont example of inclusionary zoning which indexes its affordable housing set-aside to the price of the market-rate homes.

   ii. Consider review of inclusionary incentive zoning regulations through a generic Environmental Impact Statement (EIS) as suggested in NYS enabling legislation for incentive zoning.

   iii. Potential Solution: Reconsider the city's previous work to develop Inclusionary Zoning, identify issues that prevented this from being adopted in the past and develop alternative approaches which would improve chances of inclusionary zoning in the future.

c. **Issue:** Affordable housing is not always conveniently located close to transportation, shopping, and other services.

   i. Potential Solution: Explore incentives (such as density bonuses)that reward projects shown to have multimodal transportation choices within a 1/4-mile (400 meters) walk distance of bus stops, or within a 1/2-mile (800 meters) walk distance of bus rapid transit stop and/or rail stations.

d. **Issue:** Innovative types of housing options – senior rooming housing, concierge apartments, micro units, employee/worker housing - are not expressly permitted by the current zoning ordinance.

   i. Potential Solution: Review minimum square footage of units in consideration of smaller and "micro-unit" apartments. Research requirements other municipalities have put in place including: unit features and finishes, community amenities and services, locational characteristics, operating experience, and construction and operational costs.

   ii. Potential Solution: Explore impacts of the conversion of existing accessory structures into accessory dwelling units. Research requirements other municipalities have put in place regarding accessory dwelling units and impacts on conversions to neighborhood character.

Neighborhood/Community Character

Background

2015 Comprehensive Plan

- *"A primary goal of the comprehensive plan is:*
  - *To maintain a City that values historic preservation and architectural quality in its built environment;*
  - *To maintain a City that includes diverse housing opportunities for all economic levels throughout the City."*

In recent years, there has been a strong demand for our traditional residential neighborhoods. The scenic quality of our city, high performing school system, historic buildings, and proximity to entertainment and cultural activities have created a strong housing market. In addition, previous efforts to strengthen and enhance the inner district through infill development and reuse have been successful and led to the new construction of residential and multifamily housing and the construction of new retail shops and services.

Maintaining the quality of life in our neighborhoods during this growth phase is important to residents. While the City's zoning ordinance includes many of the elements necessary to achieve good outcomes in both new construction and redevelopment, there remain opportunities to recalibrate the regulations in order to achieve better design and enhanced neighborhood character and to ensure that mixed-use development is compatible with and contributes to the character of the street, the Downtown, and adjoining neighborhoods.

6. Area and Bulk

a. **Issue:** Public perceives that there is an expanding commercial presence and increase of density which negatively effects neighborhood character.

i. Potential Solution: Conduct a build-out analysis project of commercial districts to explore the potential impacts and appropriate mitigation measures.

b. **Issue:** The mandate of the 'build-to' line in some places has created condition where buildings may be too close to street.

   i. Potential Solution: (see above Potential Solution.)

   ii. Potential Solution: Create a recommended streetscape and façade area character design guideline to address this issue.

c. **Issue:** Zoning board variances relative to property setbacks are changing the historic character of neighborhoods.

   i. Potential Solution: City should conduct a detailed context analysis project for historic neighborhoods to document the existing setbacks and degree of acceptable change.

   ii. Potential Solution: Create a context-based design guideline for use by the zoning board of appeals.

d. **Issue:** There is no height limitation on accessory structures.

   i. Potential Solution: Adopt reasonable height limits.

e. **Issue:** Height limit of 70 feet has produced flat roof properties in our inner district, with little or no variation.

   i. Potential Solution: Consider using stories in lieu of or combined with a height limit.

f. **Issue:** Many residential zones allow far too tall buildings inconsistent with existing buildings.

   i. Potential Solution: Adopt reasonable height limits in residential zones which are in keeping with their historic patterns.

   ii. Potential Solution: Investigate residential height limits which are based on the immediate neighborhood context, rather than by zoning district, to account for differences in neighborhoods.

g. **Issue:** Required front setbacks sometimes prove problematic leading to buildings too close to the street and inconsistent with neighborhood and/or adjacent properties.

   i. Potential Solution: Review all front yard setback requirements in relation to the actual built environment.

   ii. Potential Solution: Investigate the potential for front yard setbacks which are based on the immediate neighborhood context, rather than by zoning district, to account for differences in neighborhoods.

h. **Issue:** Transitions into the neighboring zones from the transect zones are often abrupt and lack variation in heights and roof styles.

   i. Potential Solution: Consideration of neighborhood contextual standards.

   ii. Potential Solution: Consider lower height limits as a transition at edges of pre-existing older and smaller more traditional structures.

7. Short-Term Rentals

a. **Issue:** There is a growing year-round commercialization of properties not currently allowed within residential districts by unregulated short-term rentals.

   i. Potential Solution: The city has already been working to research and update city codes with Albany Law School to address many of the issues of short-term rentals, and these revisions will be coordinated with the new UDO where appropriate.

   ii. Review growing body of research and emerging approaches to addressing the "Airbnb" type of on-line rentals.

8. Home Occupations

a. **Issue:** City's current regulations may not sufficiently address home occupations and provide for preservation of neighborhood character.

   i. Potential Solution: Review existing home occupation regulations to ensure that home occupations do not adversely affect the character of the surrounding neighborhood and that a home occupation remains accessory and subordinate to the principal residential use of the dwelling. Research other municipalities and if they define types of allowable home occupations.

b. **Issue:** City may not have sufficient language to define or provide guidance for home occupations and emerging workplaces.

   i. Potential Solution: Review the current restrictions on home occupation including use of accessory structures, number of workers, vehicles, signs, outdoor activity, hazardous material, utilities and services.

9. Noise Impacts

a. **Issue:** The increasing use of outdoor space for entertainment can result in impacts on adjacent residential areas.

   i. Potential Solution: Review and strengthen guidance within the special use permit evaluation process to set noise restrictions to reduce impacts.

10. Recreational Vehicle Parking

a. **Issue:** Boats, trailers, RV's and other large mobile homes are being stored on property without respect for respective front yard setbacks or aesthetics in neighborhoods.

   i. Potential Solution: Incorporate standards, regulations and limitations for storage of recreational vehicles in residential districts.

Streetscapes, Parks and the Public Realm

Background

2015 Comprehensive Plan

- *"Maintain a City that accommodates all modes of transportation including vehicles, freight, pedestrians, bicyclists, and people with disabilities;*
- *To encourage walking, bicycling and mass transit to reduce traffic congestion and improve local air quality."*

On-street parking and attractive sidewalks with street trees, pedestrian-scaled lighting, etc. is a key element of traditional/historic neighborhood design – for both residential and commercial areas – and is important to creating a walkable commercial destination. The current design of many of the major thoroughfares (South Broadway, West Avenue, Weibel Avenue, etc.) is not conducive to an active streetscape. In particular, this is due to the lack of on-street parking and adequate landscape/architectural design to help "place-making". While on-street parking cannot meet the full demand for adjacent commercial uses, it provides a critical role for convenience and to make the front building entrances and façade treatments meaningful.

11. Incorporating Adopted Plans and Policies

a. **Issue:** In the past few years, the City has approved new plans and policies (Complete Streets Policy, Urban and Community Forestry Master Plan, Saratoga Greenbelt Trail) which have not yet been fully incorporated into the UDO.

   i. Potential Solution: Incorporate these policies into the design guidelines and other elements of the UDO.

b. **Issue:** The city's standard construction details used for construction projects, typically within the right-of-way, do not reflect the adopted Urban Forestry and Community Master Plan.

   i. Potential Solution: Incorporate new standard construction details into UDO.

12. Trails

a. **Issue:** Current zoning does not provide for successful integration of proposed trail networks.

   i. Potential Solution: Incorporate proposed trails in the zoning district map.

b. **Issue:** Existing trails including Spring Run and Railroad Run are not reflected in currently zoning designations as Institutional Parkland/Recreation.

   i. Potential Solution: Incorporate existing trails in the zoning district map.

13. Public Realm

a. **Issue:** The City needs to provide more specific guidance and standards to encourage better utilization and investment in the public realm (parks, civic areas, the arts, green infrastructure, etc.).

   i. Potential Solution: Strengthen regulations for the improvement and/or creation of civic spaces as part of the development process.

b. **Issue:** The current zoning ordinance does not effectively articulate or illustrate design standards or guidelines for gateway areas.

   i. Potential Solution: Identify all major gateways and develop specific design and gateway improvement projects and a capital/fundraising program along with state and county highway agencies and partner organizations to implement these improvements.

c. **Issue:** Current expectations and definitions for public rights-of-way are not adequate nor do they correlate with the City's street design cross section details.

   i. Potential Solution: Update street design cross section details as part of the Complete Streets program.

   ii. Potential Solution: Consider approaching setbacks, tree belts, civic spaces based upon the street centerline (versus right of way line)

Public Realm

The ***public realm*** is the physical space that people experience as they travel along public ways. It includes the street itself—the pavement and crosswalks, the curbs, sidewalks, outdoor cafes and civic spaces, trees, plantings, lighting, signage and the front yards and facades of buildings.

Civic spaces are part of the public realm that can be large or small, public or semi-public where people can gather. (Image below of garden plaza at Museum of Modern Art (MOMA) in New York.)

Complete Streets

Complete Streets is a transportation policy and design approach that requires streets to be planned, designed, operated, and maintained to enable safe, convenient and comfortable travel and access for users of all ages and abilities regardless of their mode of transportation.

Currently the City of Saratoga Springs is finalizing the Complete Streets Plan to provide a framework for including all modes of mobility on existing City streets, State and County routes. This plan compliments or further progresses the City's adopted policies and plans including: Greenbelt Trail Plan, Climate Smart Communities Pledge, the Complete Streets Policy, and the Comprehensive Plan (2015).

d. **Issue:** There is little to no integration of stormwater management in the public right- of-way – living streets, rain gardens, green streets, streetscape amenities, etc. - that can enhance and beautify the public realm.

i. Potential Solution: Provide new landscaping standards which incorporate leading stormwater management designs for both public and private properties.

ii. Potential Solution: Develop standard street details from planting areas, tree beds and curb designs which include new stormwater practices.

e. **Issue:** The current design of many of the major thoroughfares (South Broadway, West Avenue, Weibel Avenue, etc.) is not conducive to an active streetscape.

i. Potential Solution: Develop complete streets design plans for public rights-of-way including amenities, green infrastructure, and develop activated streetscape designs and retrofits for major thoroughfares and downtown core streets including where appropriate on-street parking, bike lanes, location for undergrounding utilities, etc. Note: The City is currently working to finalize a Complete Streets Plan which will illustrate and provide design guidance on the elements above.

14. Complete Streets

a. **Issue:** Current zoning does not ensure the completion of sidewalk connections and identify priority areas.

b. **Issue:** The City's current transportation standards are predominately vehicular based. We need to better incorporate a Complete Streets approach.

c. **Issue:** Current zoning does not adequately address project area context such as connections to prominent landmarks, recreation, shopping, employment center, cultural centers or other key destinations between project sites and the public realm.

d. **Issue:** Currently there is inconsistent integration of pedestrian, transit, and bicycle accommodations in the public realm and site development.

i. Potential Solution: Transit Oriented Development (TOD) to increase ridership. Incentive to develop near transit by density bonus or reduction in parking requirement.

e. **Issue:** Current regulation has led to inconsistent integration of pedestrian and bicycle accommodations in the public realm and site development.

   i. Potential Solution (**Issue 14.a– 14.e**): Review, incorporate, and adopt, as appropriate, improved design standards from the following local resources:

      1. Complete Streets Policy and draft Complete Streets Plan
      2. Department of Public Safety's *Pedestrian Safety Audit*

   ii. Potential Solution (**Issue 14.a– 14.e**): Review, incorporate, and adopt, as appropriate, improved design standards from the following national resources:

      1. Manual on Uniform Traffic Control Devices and New York State Supplement
      2. American Association of State Highway and Transportation Officials (AASHTO) Policy on Geometric Design
      3. AASHTO Guide for the Planning, Designing and Operating Pedestrian Facilities
      4. AASHTO Guide for the Development of Bicycle Facilities
      5. Institute for Transportation Engineers (ITE) Designing Walkable Urban Thoroughfares: A Context Sensitive Approach
      6. The National Association of City Transportation Officials (NACTO) Urban Street Design Guide
      7. NACTO Urban Bikeway Design Guide
      8. US Access Board Public Right-of-Way Accessibility Guidelines

   iii. Potential Solution (**Issue 14.a–14.e**): Research financing mechanisms to implement priority elements of the Complete Streets Plan.

   iv. Potential Solution: Application of Complete Streets recommendations into project development – review segment of overall recommendation (for example: bike lanes proposed for multi-block area where proposed project could be a small portion of that area).

f. **Issue:** Development that does not undergo site plan or subdivision approval is not subject to streetscape requirements as other projects. Sidewalks, curbs, and streetscape improvements.

   i. Potential Solution: Review current thresholds and revise as appropriate to ensure continuous streetscape improvements.

g. **Issue:** There has been an inconsistency in the application of standards or the allowance of waivers relating to streetscape improvements.

   i. Potential Solution: Clarify required streetscape improvements, where applicable and parameters for waivers. Define when and where waivers are possible.

h. **Issue:** The City needs an improved advance planning mechanism for infrastructure upgrades, infrastructure extensions, and corridor-based design solutions for issues such as sidewalk connectivity and details on desired future streetscape design (on-street parking construction, sidewalk extensions and connectivity, etc.) in advance of the projects.

   i. Potential Solution: The City should prioritize growth areas and major corridors for planning infrastructure upgrades and corridor-based design solutions. Consider use of generic EIS and mitigation fees for cost-sharing with the beneficiaries of these improvements through the development process.

i. **Issue:** The current ordinance only calls out traffic calming in one area of the City, Marion Avenue Gateway, and should be considered in other situations and neighborhoods.

   i. Potential Solution: Integrate traffic calming elements into overall project development plans for the city.

a. **Issue:** While 1:15 bike to parking ratio is recommended in Transect Districts currently (6.2.9), the city's zoning ordinance does not provide for this in other districts and it's not required in any districts.

   i. Potential Solution: Require adequate storage for multi-family and non-residential uses. Many university communities such as Austin, TX, Madison, WI, and Boulder, CO, have such standards in place. A good source for standards relating to bicycle parking is the Association of Pedestrian and Bicycle Professionals (http://www.apbp.org/).

   ii. Potential Solution: Consider allowances for parking reductions in specified zone districts if bicycle lockers are provided. In other communities, a typical incentive is to allow a reduction of one parking space for every 3-4 bicycle parking spaces (often with a maximum credit of 5-10 off-street parking spaces).

15. Infrastructure

a. **Issue:** Currently there is not an active provision of when utilities should be placed underground or re-routed which can result in conflicts with future activities in the public realm.

   i. Potential Solution: Coordinate with utility companies to create a master plan for underground utility placement and interim processes and criteria for incremental undergrounding of utilities.

b. **Issue:** The City needs an improved advance planning mechanism for infrastructure upgrades and infrastructure extensions.

i. Potential Solution: The City should prioritize growth areas and major corridors for planning infrastructure upgrades and corridor-based design solutions. Consider financial mechanisms such as generic EIS and mitigation fees for cost-sharing with the beneficiaries of these improvements through the development process.

c. **Issue:** Construction activities are negatively impacting public streets, curbing, and sidewalks and post construction these public amenities are not restored to appropriate pre-construction conditions.

i. Potential Solution: Require provisions (e.g., letter of credit, performance bond) for construction projects to ensure full and proper restoration of impacted properties and public realm.

16. Open Space

a. **Issue:** Current allowable uses, densities, and incentives within the Greenbelt and Country Overlay area may not be achieving the City's overall goals of the Greenbelt and Country Overlay area.

i. Potential Solution: Review allowable uses and intensities in the Country Overlay area to determine if they are appropriate for residential setting, or if performance standards should be included.

b. **Issue:** The current method of requiring conservation subdivisions for each project may result in a greenbelt which is highly fragmented.

i. Potential Solution: Explore mechanisms to achieve a more desirable, consolidated open space and recreation land in lieu of providing it on-site.

ii. Potential Solution: Conduct a build-out analysis of the Greenbelt area and identify alternatives and incentives to create a more intact and larger open space network.

c. **Issue:** It is often challenging to find a party(s) to hold conservation easements for both grantees and grantors.

i. Potential Solution: Research improved mechanism(s) to hold the easement to hold, monitor and maintain conservation easements.

d. **Issue:** The City does not differentiate requirements between conservation easements of large and small parcels.

i. Potential Solution: Explore model approaches and template language that could assist with the implementation of smaller-scale open space protection.

e. **Issue:** The current regulation does not provide adequate standard language and details regarding the allowable uses and maintenance of open space.

i. Potential Solution: Consider development of standard language for easements/deeds to lands set aside for open space and or recreation.

17. Subdivision Regulations

a. **Issue:** The current subdivision language, organization and layout are repetitive, difficult to navigate, and lacks clear graphic descriptiveness and quality.

   i. Potential Solution: Re-write and re-organize subdivision regulation to be clearer.

   ii. Potential Solution: Centralize common requirements into single spot to reduce redundancy.

   iii. Potential Solution: Add graphic examples to illustrate desired features and goals of future subdivisions.

   iv. Potential Solution: Clarify expectations for the applicants and streamline the review process.

   i. Potential Solution: Integrate streamlined and clearer regulations for subdivision control in the UDO.

b. **Issue:** Currently there is no division between large and small subdivision.

   i. Potential Solution: Consider revising process based on scale and magnitude of project. Possible allowance of some administrative approvals.

Review of Zoning Districts / Map

Background

2015 Comprehensive Plan

> *"If the City is to be successful in preparing for the future, it must have increased flexibility to accommodate the rapidly changing needs of business, commerce, and our residents."*

The analysis considered the extent of dissimilarity between existing land uses, existing zoning and proposed future land use designation and the extent to which a zoning modification may be appropriate. The analysis looked at the area and bulk standards, allowed uses, residential density and variances in the different zoning districts.

18. Updating Maps and Districts

a. **Issue:** Assuring consistency between comprehensive plan and the future land use plan.

i. Potential Solution: Zoning maps need to be updated in consideration of the 2015 Comprehensive Plan and its "Future Land Use" map which outlined the desired vision for future land uses within the city going forward.

ii. Potential Solution: For map updates that are particularly challenging, consider a future phase of neighborhood-based planning prior to implementation of zoning map amendments.

b. **Issue:** Existing zoning does not adequately reflect the actual character, physical form or the varied historic neighborhoods around the city (See Required vs. Existing Analysis).

i. Potential Solution: As an interim measure, require a context-based neighborhood character compatibility analysis for new projects.

ii. Potential Solution: Document context-based design parameters for existing neighborhoods—in particular those expected to face high development pressure, and devise protocol for determining acceptable level of change.

c. **Issue:** In the past decade, the City has not evaluated and/or updated language and mapping for the following districts:

- Tourist Related Businesses (TRB)
- Agriculture (RR)
- Industrial (IND)
- Highway General Business (HGB)

i. Potential Solution: Evaluate the purpose of each of these districts/uses and update the zoning map and ordinance to reflect current needs and goals as expressed in the comprehensive plan.

d. **Issue:** The City's 31 zoning districts, including three transect districts and seven Planned Unit Developments (PUDs); have not been reviewed comprehensively in terms of uses, geographical location, and attributes including area and bulk standards for decades.

i. Potential Solution: Identify potential changes to the zoning district map to implement the land use vision as recommended in the comprehensive plan.

ii. Potential Solution: Develop appropriate amendments to use schedule including special use permit list and area and bulk standards.

e. **Issue:** In Saratoga Springs, transect zones are a hybrid of form based and traditional zoning. This construct may not provide the necessary flexibility or sufficient perimeters to guide applicants and accommodate a flexibility of uses.

i. Potential Solution: Establish evaluation criteria and review projects constructed under these more form-based regulations in terms of what is working and what is not.

f. **Issue:** The existing District Corporation Line, currently shown on the zoning map, needs to be updated and/or may no longer be necessary. Parcels can be split/bisect by district boundaries resulting in the creation of two separate parcels. These parcels then create unique issues when questions arise related to zoning and building code compliance.

   i. Potential Solution: Evaluate current District Corporation Line and its original purpose and the whether or not it is still useful and necessary.

g. **Issue:** In the transect zones, the current ordinance has only generic sketches of building form and does not provide sufficient clarity and guidance for placemaking for the next generation of Saratoga Springs' urban form.

   i. Potential Solution: Include illustrated design guidelines in the UDO addressing key issues for building form and placemaking.

19. Rural Residential

a. **Issue:** Rural Residential district allows agriculture but does not support a variety of potential complementary agricultural uses.

   i. Potential Solution: Review New York State Dept. of Agriculture and Markets definition of agriculture and the comprehensive plan recommendations and update the UDO accordingly.

20. Preservation

a. **Issue:** The local historic district does not match the National Historic Register districts.

   i. Potential Solution: Interim action rectifies the discrepancy with an updated historic district map.

   ii. Potential Solution: Assess and re-evaluate the boundaries of the existing historic districts to ensure that they are providing adequate protections for historic properties and resources.

   iii. Potential Solution: Consider adding a requirement for site-specific review of historic resources prior to demolition permit including consideration of protection from "demolition-by-neglect".

   iv. Potential Solution: Develop additional review process to assist with determination of when demolition is an appropriate resolution to allow reasonable new construction and city growth.

   v. Potential Solution: Consider applying some level of Design Review to properties immediately adjacent to National Register properties—but which are otherwise outside the Historic Districts and do not have Historic District protections—to protect them from adverse impacts from neighboring changes.

b. **Issue:** Historic preservation is a core value of the City's economy; however the juxtaposition of new development in historic area can create design and compatibility conflicts.

   i. Potential Solution: Incorporate better guidance and checklists for the review of historic properties to help ensure consistent and fair review of all projects.

21. Creative Economy

a. **Issue:** Current zoning may not be sufficiently flexible to encourage the "creative economy".

   i. Potential Solution: Define the mix of uses and flexibility required then determine the zoning districts and related modifications needed to be included in the UDO including identification of "next generation" locations for low-cost, flexible space (adaptive reuse or new construction).

Process Improvements

Background

Zoning regulation governing development review and other administrative matters create the procedural environment through which the City can achieve the goals and policies laid out in its comprehensive plan and other adopted plans. At their best, development review provisions can promote the type of development a community wants by providing a clear, predictable path to project approval; conversely, vague review processes with unclear requirements can cause developers a high level of anxiety, frustrate community residents, and severely dampen a City's ability to attract desirable growth. Generally, the development community and individual applicants value three central qualities in any administrative ordinance: certainty in the requirements and structure of the review process, built-in flexibility to adjust development standards to the needs of individual projects, and opportunities to request relief from requirements that constitute a substantial burden. Certainty about the types of development they can expect to see in their community is also important to residents. The degree to which Saratoga Springs can incorporate these qualities into its UDO will help improve its ability to compete for development in the near future.

During the community workshop, it was clear that the community expects the UDO to set forth clear administrative procedures to be followed for all types of land use decisions. One method to explore is the allowance of more uses and other approvals "by right" or subject to appropriate and suitable locational, form, and operational standards and limitations and without discretionary review of building and site design. By allowing these uses by right, Saratoga Springs will not only speed the development process, but also provide additional certainty to prospective developers that their projects are allowed and encouraged.

22. Regulation

a. **Issue:** The public perception is that there is little predictability or consistency with the way projects are being reviewed and approved.

   i. Potential Solution: Enhance communication regarding the review process in terms of opportunities for public access and engagement and documentation of decisions.

23. Improve the Quality of Applications

a. **Issue:** Public has express the concern that application materials are not always complete, sufficiently detailed, or accurate**.**

   i. Potential Solution: Review existing forms/applications for improvements, identify areas which may be required to complete, or additional info is requested.

   ii. Potential Solution: Develop form fillable PDFs to improve ease of completing, ensuring they are readable and already in electronic form to eliminate need to scan before posting on website.

b. **Issue:** Applicants have noted inconsistent board review and lack of predictability of outcome.

   i. Potential Solution: Develop clearer standards, goals, principles and visual examples within the ordinance.

   ii. Potential Solution: Design and approval checklists should be updated or clarified.

   iii. Potential Solution: A “pre-application” meeting is currently encouraged, but could be required, as a prerequisite to filing a formal application.

   iv. Potential Solution: Describe within the UDO the process for owners, designers and consultants to request consultation(s) on their projects with planning staff and/or other relevant departments.

24. Public Communication Channels

a. **Issue:** Applicants and the land use boards as well as the general public have been frustrated that they do not always know what is happening with different applications or have a difficult time keeping up with last minute design revisions.

   i. Potential Solution: Revise the standard procedures with which it handles typical applications for review and approval and seek more timely methods of notification such as better utilization of web-based access to materials. Require applicants to submit material in digital form.

25. Enhanced Notifications

a. **Issue:** The general public does not have adequate and/or proactive notification of pending projects in their neighborhoods.

   i. Potential Solution: In addition to voluntary email notifications which people can sign up for, on-premise signage can be required to be posted on a subject property to announce a pending application review for significant proposals such as use variances, demolitions, etc.

26. Staff Resources

a. **Issue:** The City has limited staff and resources for the volume and magnitude of the current project and application pipeline.

   i. Potential Solution: Seek additional staff, resources, whether permanent or through third party consulting services.

27. Evaluate Procedures

a. **Issue:** There is a perception that variances are freely granted.

   i. Potential Solution: Consider clarifying the standards upon which variances are based and provide additional guidance regarding how concepts such as "character of the neighborhood" are documented and defined.

b. **Issue:** Land Use Board processes are too lengthy.

   i. Potential Solution: Consider an administrative review process for simple applications and focus the land use board involvement in the larger, more challenging or precedent-setting decisions.

   ii. Potential Solution: Consider setting threshold parameters for an "early determination of major noncompliance" for project proposals that are far afield from the existing ordinance requirements.

c. **Issue:** Current regulation does not discourage code violations.

   i. Potential Solution: Strengthen code enforcement provisions in the Administration and Enforcement section of the UDO.

d. **Issue:** Larger or more professional design applications can often be treated differently than smaller novice applicants.

   i. Potential Solution: Improve application guidelines and improve materials to better assist small project applicants.

e. **Issue:** The land use boards guide development in the City and should be staffed with qualified members.

Sustainability and Resiliency

"The process of designing, developing, and inhabiting the built environment has a profound influence on a community's economy, environment, and quality of life. In the United States, buildings account for approximately 36 percent of total energy consumption, 30 percent of greenhouse gas emissions, 13 percent of water use and approximately 170 million tons per year of construction and demolition (C&D) debris. Buildings also contain indoor air that can be 100 times more polluted than outside air."

Sustainable Design and Green Building Toolkit for Local Governments, June 2013

i. Potential Solution: Consider adoption of appointment guidelines/requirements as permitted by state enabling legislation.

Sustainability, Resiliency, and the Environment

Background

The vision set forth in the 2015 Comprehensive Plan states "The overriding philosophy that will guide future development of our "City in the Country" will be sustainability".

The availability of reliable, resilient, and affordable energy is critical to the welfare of Saratoga Spring's citizenry and is essential to our local and state economy. In 2015, New York adopted a new State Energy Plan which puts New York State on a path to achieving the following clean energy goals:

- 40% reduction in greenhouse gas emissions from 1990 levels
- 50% of energy generation from renewable energy sources
- 600 trillion Btu increase in statewide energy efficiency

To meet these goals, Governor Andrew M. Cuomo directed the Public Service Department (PSC) to establish a new Clean Energy Standard mandating 50% of the electricity consumed in NY to come from clean energy sources by 2030. In addition, the State Energy Plan coordinates Governor Cuomo's major new energy initiative, known as Reforming the Energy Vision (REV). REV's goal is to create a cleaner, more affordable, more modern and more efficient energy system in New York, through the increased development of distributed energy resources, like rooftop solar, energy efficiency, and battery storage.

In order to achieve our own comprehensive plan goals, adapt to climate change, and assist in meeting the state's energy goals, Saratoga Springs will need to consider methods through our UDO that could: increase adoption of distributed energy resources, increase energy efficiency of our building stock, and reduce greenhouse gas emissions.

28. Adoption of Renewable Energy and Advanced Technologies

a. **Issue:** Current Solar Access Ordinance may be contradictory to economic development, desired urban form,

and Urban and Community Forestry Master Plan. In addition, it does not define "solar" which could be broadly interpreted.

i. Potential Solution: Replace and/or refine the current Solar Access Ordinance 6.4.8. The City should explore the adoption of all or part of the Central New York Regional Planning and Development Board and/or the Land Use Law Center at Pace Law School's Model Ordinance for Solar Photovoltaic Systems.

b. **Issue:** The City of Saratoga Springs Building Department uses a standard building permit form to review solar applications. The standard permit does not contain solar specific requirements such as the requirement to submit a one-line or 3-line electrical diagram, specification sheets for manufactured components, and details on the manufactured mounting system and modules – elements essential for the permit approval process.

i. Potential Solution: Adopt the New York State Unified Solar Permit or a variation of that permitting process which meets the needs of the City and covers all size solar systems.

c. **Issue:** Non-conforming lots may have an accessory structure as the sole use on a residential property. The current allowance of accessory structures on non-conforming lots does not take into account solar arrays as the solar structure and/or use on the property.

i. Potential Solution: Consider removing solar in the definition of allowed accessory structures.

ii. Potential Solution: Add language that solar arrays/systems cannot be the principle use or structure on a property.

d. **Issue:** Solar as utility establishments are not well defined and detailed in the current zoning ordinance. Solar energy systems vary greatly in size and shape, and require varying levels of review depending on magnitude of impacts.

i. Potential Solution: Update the UDO to define each type of solar energy system the City wishes to allow and regulate.

ii. Potential Solution: Determine where to permit and how to regulate each defined system in the UDO, as each must be subject to clear standards and have an appropriate required approval process or exemption.

iii. Potential Solution: Define general standards and application requirements for large-scale solar power generation installations. Consider if site plan, operations and maintenance plan, landscaping plan, liability insurance, decommissioning plan, and/or financial surety should be required for approval.

e. **Issue:** Existing ordinance does not encourage the adoption of Renewable/Distributed Energy Resources in New Construction and Substantial Renovation.

   i. Potential Solution: Encourage and/or require solar ready design for new construction projects larger than 5000 square feet.

f. **Issue:** The most effective point in the development process to encourage solar orientation is when a parcel is being subdivided into lots for sale. Saratoga Spring's subdivision regulation does not require streets and lots to be oriented to maximize the solar resource available to each lot or to a minimum percentage of lots.

   i. Potential Solution: Explore methods to encourage subdivision solar orientation analysis.

29. Electric Vehicle (EV) Ready Environment

a. **Issue:** Current zoning does not define permitted electric vehicle supply equipment uses by zoning district nor encourage increased adoption of electric vehicle supply equipment.

   i. Potential Solution: Explore what methods other municipalities encourage EV readiness in zoning.

   ii. Potential Solution: Include language that expressly allows EV charging stations in all zoning districts.

   iii. Potential Solution: Explore requiring Level 2 or 3 charging station be installed in off street parking areas of new commercial development.

30. Energy Efficiency

a. **Issue:** By following existing zoning regulation, the City may not be able to achieve the energy efficiency goals outlined in the comprehensive plan and yield the desired long term benefits for our community.

   i. Potential Solution: Explore "incentives" (monetary or otherwise) for new commercial building construction projects and/or commercial significant renovation projects that exceed the current version of the NY State building code exceeding building code by 20%. Example - the building owner could receive a green building "Payments in Lieu of Taxes" (PILOT). Virginia Beach offers property tax relief for homes or buildings that are at least 30% more efficient than the current state energy code. If a home or building is certified as 30% more efficient by an architect or engineer, the owner gets a 15-cent reduction in property taxes per $100 of assessed value each year the incentive is offered.

   ii. Potential Solution: Explore requirements for all new construction and major renovations of city-owned, occupied, or funded buildings over 10,000 sq. ft. to

exceed the current version of the NY State building code exceeding building code by 20%.

iii. Potential Solution: The Planning Department could offers free green building consultations to help improve an applicant's project(s).

iv. Potential Solution: Explore tools for building owners to complete whole-building energy assessments prior to renovation of residential buildings.

31. Environment

a. **Issue:** The City of Saratoga Springs may not have the necessary tools to practically and effectively reduce the obtrusive aspects of outdoor light usage while preserving safety, security, and the nighttime use and enjoyment of property.

   i. Potential Solution: Explore adoption of all or parts of the International Dark-Sky Association (IDA) and the Illuminating Engineering Society of North America (IESNA) Model Lighting Ordinance (MLO) or the Pattern Outdoor Lighting Code in order to address outdoor lighting pollution.

b. **Issue:** Developers are not encouraged to conserve and reuse building materials and/or recycle construction and demolition debris.

   i. Potential Solution: The City could develop a construction and waste demolition diversion plan. Some municipalities require projects to divert a percentage of construction and demolition debris away from the landfill through reuse, recycling and composting.

c. **Issue:** Current regulation does not encourage water conservation methods. Water conservation reduces the burden on municipal water supply and wastewater systems, saves energy from reduced amounts of water pumped, treated and distributed, and reduces wastewater treatment collection.

   i. Potential Solution: Explore requiring EPA Water Sense toilet and aerators in commercial development.

d. **Issue:** The City may not be providing sufficient regulation to assist in the reduction of heat islands. Rooftops, roads, parking lots and other paved surfaces absorb and retain heat, leading to an increase in air temperatures in the immediate area. Higher air temperatures contribute to higher energy costs for air conditioning, compromise human health, and increase air pollution.

   i. Potential Solution: Incorporate the Urban and Community Forestry Master Plan to enhance tree specifications in the UDO.

   ii. Potential Solution: Explore methods to encourage the development of green roof systems on new and existing buildings.

   iii. Potential Solution: Remove potential impediments to the addition of passive solar shading devices and/or increased overhangs intended to reduce the impact of

solar heat gain on a building or lot, by exempting dimensional requirements under certain circumstances.

e. **Issue:** Developers often use conventional stormwater practices and have not fully embraced green infrastructure techniques that can capture and treat stormwater runoff before it is delivered to the watershed.

   i. Potential Solution: Remove barriers to and promote use of green infrastructure in the UDO. Where possible, encourage use of bioswales, vegetation protection, and rain gardens in concert with more traditional “gray” infrastructure engineered solutions to stormwater management.

PART 3 – Analysis of Zoning Ordinance, Adopted Plans and Policies, and Additional Studies

As part of this zoning diagnostic, a number of previous plans and reports adopted by the city in the past several years were also reviewed. The intent of this review was to identify other findings or improvements which have been recommended which should be incorporated into the new ordinance. A review of each of these plans or reports follows.

Zoning Ordinance Analysis

A review of the existing zoning regulation was conducted to identify areas which required change, or which were recommended to improve the ordinance or make necessary corrections. The following pages represent a more detailed look at specific sections of the zoning ordinance which were identified for potential improvements or corrections.

Analysis – Existing Zoning Ordinance		
Section	**Topic / Item**	**Recommendation**
1.7	Interpretation of District Boundaries	Revise or remove provision for when a zoning district boundary line divides a lot, the district requirements on either side of the boundary may be extended into the remaining portion of the property.
2.2	Prohibited uses	Prohibited uses follow former comprehensive plan SDA – needs update. Revise some prohibited uses in transect zones to potentially be permitted with review, provided that transect designs are being met.
Table 2	Special permit uses	There are effectively no uses allowed by right in transect zones. Revise some special permit uses in transect zones to potentially be allowed with site plan review, provided transect designs are being met.
Table 2	Barns and stables	Consider permitting barns and stables as accessory structures in the Suburban Residential – 1 (SR-1) and SR-2 areas, since they are already permitted in Rural Residential (RR), Urban Residential – 1 (UR-1), and UR-2.
Table 2	Car rentals	Add car rental agency to Highway General Business (HGB) district
Table 2	Office/Medical Business / Tourist Related Business districts – South Broadway	South Broadway area near park needs special consideration for sensitive design as approach into the city. Need to improve design considerations for these zones coming into the city gateway.
Table 3	Structure heights	Review and revise height limits in districts. Many residential districts permit up to 60' or 70', UR-5 permits 185' - these should be lower.
Table 3	Structure heights	Clarify in UDO that structure heights do not include accessory appurtenances such as chimneys, spires, cupolas, etc – which are permitted to extend a limited amount above allowed height of structure.
Table 3	Side yard setbacks	Consider removing "total" side yard setback distances, if we already have minimum setbacks for each side.
Table 3	Lot Widths	Review current lot width requirements to ensure compatibility with existing lot widths.
Table 3	Lot Size	Review all of the current lot size and coverage percentages to ensure compatibility with existing lot sizes and neighborhood character.
Table 3	Note (J)	Note (J) regarding size limit of one-story structures in Neighborhood Complementary Use- 3 (NCU-3) district – appears to be error in table - remove this note in NCU-3
Table 3	General notes	Consider removing requirement that terraces and patios must be set back a minimum of 10' from an adjoining property line
Table 3	Minimum 2-story requirement in Transect Zones	Clarify the minimum 2-story requirement for transect zones so that it is not misinterpreted or circumvented

Analysis – Existing Zoning Ordinance		
Section	**Topic / Item**	**Recommendation**
Table 3	Industrial-Light (IND-L) district	There are no area and bulk requirements listed for the IND-L district, these should be added.
Sec 2.3 A	Principal buildings	Clarify wording regarding the number of principal buildings permitted per lot.
Section 3 – Overlay Zoning Districts		
Sec 3.1	Transect zones	Clarify use of "should" and "shall" throughout section to ensure required elements are clear.
Sec 3.1	Illustrations	Revise/update illustrations to clarify zoning and design intent
Sec 3.4.3	Corridor Lodging	Review / revise corridor lodging district area, consider adding West Ave, verify existing locations are still needed.
Section 4 – Incentive Zoning Districts		
Sec 4.1	Senior housing incentive	Consider removing 2nd floor requirement for all senior housing developments in the Tourist Related Business (TRB) and HGB districts.
Sec 4.1	Senior housing incentive	Review permitted districts for affordable senior housing incentives to consider what new areas if any may be appropriate
Sec 4.1	Senior housing incentive	Consider still permitting full or partial incentive where development is not 100% senior housing, but instead a large percentage.
Sec 4.2	Open space incentive	Define amount of public open space or other qualifications needed to obtain the density bonus. Consider sliding scale which can go up to the full 20% bonus, based on amount of land and amenities provided.
Sec 4.3	Affordable housing/recreation	Define amount of public recreation space or affordable housing needed to obtain the density bonus. Consider sliding scale which can go up to the full 20% bonus, based on amount of land, amenities or housing provided.
Sec 4.3	Affordable housing/recreation	Clarify design requirements to obtain density bonus, including the fact that any affordable housing must be integral to overall project design and not segregated, if recreation space can be off-site, etc.
Sec 4.3	Affordable housing/recreation	Verify intent that incentive must go through subdivision process.
Sec 4.3	Affordable housing/recreation	Incentive is only permitted in two districts. Review existing districts where incentive is permitted, consider allowing in other districts, perhaps with different requirements if necessary.
Sec 4.3	Affordable housing	Consider adding additional housing types as allowed or encouraged by the zoning to provide better housing diversification and more flexibility.
Section 6 – Supplemental Regulations		
Sec 6.1	Signs	Revise and clarify sign requirements in the UDO. Provide examples of each sign "type" with measurement method, general standards.

Analysis – Existing Zoning Ordinance		
Section	**Topic / Item**	**Recommendation**
Sec 6.1	Electronic signs	Clarify code regarding prohibition or limit on digital or video signs, clarify use of neon signs, decoration or advertisements inside of commercial widows.
Sec 6.1	Window signs	Clarify code regarding use of "window" signs, applied on window vs. hung inside of window, size, use in combination with other approved signs, etc.
Sec 6.1	Residential signs	Clarify/revise sign standards for non-residential uses in residential districts. Clarify "residential" districts. Should also permit wall sign in lieu of a freestanding sign, not placed in freestanding sign section.
Sec 6.1	Signs	Clarify use, size and height requirements for all signs by district
Sec 6.1	Sandwich board signs	Clarify use of sandwich board signs, allowed size and where they are permitted, hours of use. Consider permitting on commercial streets other than just Broadway. Consider use outside of public right-of-way.
Sec 6.1	Signs	Clarify and define portable signs, and their difference with sandwich board signs.
Sec 6.1	Signs	Revise code to permit greater flexibility in wall sign placement, accommodate vertical or projecting signs with certain conditions.
Sec 6.1	Signs	Revise code to require, as a condition of a sign permit, that the street address number be prominently displayed on the primary façade.
Sec 6.1	Temporary signs	Add provision for temporary banners or signs for new businesses which have just opened that have not had permanent sign built or approved yet, with limitations.
Sec 6.1	Freestanding signs	Revise code to permit "residential subdivision" signs to be permitted for similar off-street townhouse, apartment or condo developments as well.
Sec 6.2	Parking requirements	Review and revise general parking requirements, verify minimum or maximum number of required spaces. Clarify provisions and alternatives for shared parking, off-site parking accommodations.
Sec 6.2.2	Planning Board waivers	Revise and clarify parking waiver ability of Planning Board to set more specific criteria or safeguards in order to qualify for waiver, set temporary conditional approval during trial period, etc. Set a threshold where board can waive certain requirements without zoning board variance approval. Review allowable districts where this threshold waiver may be obtained, consider different thresholds for different districts. Add ability to waive certain dimensional requirements.
Sec 6.2	Parking requirements	Update/revise off-street loading area requirements.
Sec 6.2	Bicycle parking	Include required bicycle parking provisions for transect zones, recommended bicycle parking for other districts.

Analysis – Existing Zoning Ordinance		
Section	**Topic / Item**	**Recommendation**
Sec 6.2	Transect Zone 6 (T-6) parking requirements	Investigate alternatives or mitigations to having no minimum parking requirements for projects within the T-6 district. Consider parking offsets or in-lieu provisions for certain sized projects.
Sec 6.2.7 F	Parking lot landscaping	Revise landscaping standards to provide meaningful landscaped areas as part of parking lot, provide design standards, guidance, calculation method, dimensional requirements, etc. Include landscaping design standards for areas around the perimeter of the parking lot (not just within parking area) and along street frontage as applicable. Landscaping requirements may differ by district.
Sec 6.2.7	Parking	Include provision for permeable parking surfaces, as possible incentive, or to count toward landscaping percentage.
Sec 6.2.7 D	Parking location	Provide acceptable parking setbacks by district for front, rear and side yard areas.
Sec 6.2	Parking structures	Provide design standards for parking structures.
Sec 6.2	Parking structures	Revise code to require/enforce use of liner buildings around parking structures – they are not being provided as originally intended. Avoid creation of single-use structures.
Sec 6.3.3	Vehicle fueling stations	Provide design standards for gas stations.
Sec 6.4.3	Home occupations	Revise and clarify home occupation provisions, consider limit on off-street parking. Coordinate sign requirements with sign section.
Sec 6.4.3	Home occupations	Revise to permit in accessory structure, not limited to primary, with conditions as necessary.
Sec 6.4.4	Temp accessory dwellings	Review and clarify use of temporary accessory dwelling units, time limit on temporary status. Consider permitting in legal accessory structures, or permitting a secondary entrance, instead of limiting to primary structure through primary entrance.
Sec 6.4.6	Pools	Review definition of yard areas on corner lots as it relates to pools, where they could potentially be permitted in front yards.
Sec 6.4.8	Solar access	Revise solar access provision to more adequately balance property rights with right to solar access. Coordinate with solar access committee on recommended strategies for consideration.
Section 7 - Permits & Approvals		
Sec 7.0	Permits and approvals	Revise review and approval process section to clarify process, strengthen requirements and improve public noticing. Add process flow-chart to clarify steps.
Sec 7.1.6	Property owner notification	Consider adding requirement to post notice sign on property notifying public of pending review projects for certain thresholds, such as use variances, special permit applications, demolition or major projects.

Analysis – Existing Zoning Ordinance		
Section	**Topic / Item**	**Recommendation**
Sec 7.1.6	Property owner notification	Consider adding requirement for online posting of project descriptions or applications in advance of review board meetings.
Sec 7.2.6	Public hearing	Clarify that public hearings shall also be posted on city website.
Sec 7.2.7	Property owner notification	Consider adding requirement to post notice sign on property notifying public of pending review projects for certain thresholds, such as use variances, special permit applications, demolition or major projects.
Sec 7.3	Land disturbance	Strengthen and clarify land disturbance section. Consider different clearing thresholds for different districts. Include protection for larger, old-growth trees prior to site clearing, provision to have these incorporated into design. Include potential fines for clearing without permit.
Sec 7.3.2	Storm water control	Clarify wording to address ambiguity identified by EPA letter to city.
Sec 7.3.2	Storm water control	Review and revise current stormwater pollution prevention thresholds. Coordinate with current New York State Department of Environmental Conservation (NYSDEC) guidelines.
7.4.18	City Landmarks	Consider removing the listing of individual parcel info and "metes & bounds" data for specific properties and historic districts if this data is already on file with city records and can instead be simply displayed on the map.
7.4.18	Map of Historic District Areas	Update historic district map to include city landmarks.
Section 8 – Variance and Interpretation Appeals		
Sec 8.0	Variances & Interpretations	Consider adding requirement to post notice sign on property notifying public of pending review projects for certain thresholds, such as use variances, special permit applications, demolition or major projects.
Sec 8.0	Variances duration	Consider adding expiration date to variances which were once-utilized, but which are no longer needed.
Sec 10.2	Planned Unit Developments (PUD)	PUDs are currently permitted in almost all districts except RR, and some protected areas. Review zoning districts where PUDs are permitted, consider removing them from transect zones and other districts where they are not needed.
Sec 10.2	Planned Unit Developments	Consider a minimum lot/land size for PUDs.
APPENDIX A – DEFINITION OF TERMS		
	Definitions, general	Combine all definitions from subsections of city code into one section. Cross-check for duplicates, conflicts and consistency with usage in code. Identify terms in code which are missing from definitions.
	Agriculture	Consider revising definition of agricultural uses to expand activities, include agri-tourism, production for consumption on-site (tastings, events, tours) and retail sales.

Analysis – Existing Zoning Ordinance		
Section	**Topic / Item**	**Recommendation**
	Yard-Front	Clarify definition of corner lot to explain remaining two sides of the lot are "sides".
	Story	Clarify definition of "story", especially with regards to required 2-story development.
	Accessory structure (residential)	Update definition for "accessory residential structure" to include potential for finished and/or habitable spaces.
	Accessory structure (residential)	Clarify definitions in code related to dwelling units, and the specific features such as bathrooms, kitchens, etc. which differentiate between a normal habitable space used for a playroom or office from an accessory dwelling unit.
	Accessory structure	Add a definition for accessory structure. Clarify the inclusion of antennas, satellite dishes, solar panels, HVAC equipment etc and how those relate to required setbacks or distance separations.
	Structure	Revise definitions to not define air conditioning units and similar mechanical systems as a structure. Develop separate category and distance separations for them.
	Alley	Review and clarify definition of "Alley".
	Family, transients, etc.	Clarify/revise definition single-family residences and transient accommodations – include tenure.
General / Other		
	Infill development	Need to ensure more consistency with neighborhood context for infill development and teardowns.
	Utility lines	Require or incentivize buried utility lines underground in certain areas and with certain triggers.
	Civic / Amenity spaces	Refine requirements for these and clarify. How are these measured? Provide list of items developers can choose from, trails, and gardens.
	Street standards	Integrate complete streets plan into street standards.
	Carriage houses	Include standards to help insure architectural style or character of carriage houses remains original or tied to design of primary structure.
	Sidewalks	Provide mechanism for city to require sidewalk construction in missing/infill areas as part of building permit approval or other process.
	Neighborhood character	Provide basic controls to maintain built pattern of historic neighborhoods with regard to front porches, garage to the side or rear of site, attached or detached, etc.
	Transect zoning	Need to help encourage transect zoning designs to break up the scale and mass of the building, more creative designs.
	Street lighting	Require dimming adapters for LED streetlights
	First floor retail	Need to better define how much of the first floor area needs to be usable commercial space instead of inactive uses such as parking.

Analysis – Existing Zoning Ordinance		
Section	**Topic / Item**	**Recommendation**
	Mixed-use developments	Consider re-defining "mixed-use" as potentially being mixed-use for the entire property (rather than only for each individual building) to provide greater design flexibility in certain zones. This would allow a commercial building along the street with a residential building in the rear.
	Public Notices	Review and revise public notice procedures to clarify that notices should be sent in radius, measured from property line of subject parcel, and not applicant address.

Each of the recommendations in the table above are planned to be researched for inclusion in the code edits, unless directed otherwise. The recommendations listed here are not intended to be fully inclusive, as additional edits to the city codes are likely to be identified during the course of the project.

2014 Saratoga Greenbelt Trail Plan

Adopted in May of 2014, the Greenbelt Trail Plan outlined a long-term plan to implement a trail system throughout the city. Each of the items below was reviewed to see how it could be further implemented in the new UDO code.

Section / Page	Recommendation	How to Implement or Improve
Section 1, pg 6	Incorporate Saratoga Greenbelt Trail into zoning map.	Consider showing location of the Saratoga Greenbelt Trail on the zoning map. Development proposals should include reservation of the rail corridor area for future trail and open space use, but such proposals shall not be penalized for reserving the rail corridor acreage when calculating density. If public access or recreational use is not feasible on an individual parcel of land when development proposals are approved, then such proposals should include reservation of these lands for future conservation and open space use. Consider formalizing all existing trails by ensuring that they are zoned Institutional Parkland/Recreation. Consider the creation of a trail/greenway overlay zone.
Section 6, pg 70	Use shared use path guidelines outlined in this document	Incorporate shared use path design criteria into street and trail standards within the code; illustrate existing and proposed trail connection on zoning map.
Section 6, pg 71	Use boardwalk guidelines outlined in this document	Consider inclusion of boardwalk design criteria into code, or reference these standards in the trail plan.
Section 6, pg 72	Use shared street guidelines outlined in this document	Incorporate shared street design guidance into street standards within code; identify streets or areas where these elements are desired.
Section 6, pg 73	Use cycle track guidelines outlined in this document	Consider inclusion of boardwalk design criteria into code, or reference these standards in the trail plan; identify streets or areas where these elements are desired.
Section 6, pg 74	Use marked / unsignalized crossing guidelines outlined in this document	Incorporate marked / unsignalized crossing design criteria into code as part of general street standards.
Section 6, pg 75	Use signalized / controlled guidelines outlined in this document	Incorporate signalized / controlled crossing design criteria into code as part of general street standards.
Section 6, pg 76	Use undercrossing guidelines outlined in this document	Consider inclusion of undercrossing design criteria into code, or reference these standards in the trail plan.
Section 6, pg 77	Use overcrossing guidelines outlined in this document	Consider inclusion of undercrossing design criteria into code, or reference these standards in the trail plan.
Section 6, pg 78	Use wayfinding and orientation guidelines outlined in this document	Coordinate some of the suggested wayfinding signage with the wayfinding program in progress by the city and incorporate into code.

2013 Urban and Community Forest Master Plan

Adopted in May of 2013, the Urban and Community Forest Master Plan (UCFMP) identified specific current and future legislative changes which needed to be made to preserve and expand our current urban forest. Each of the items below was reviewed to see how it could be further implemented in the new UDO code.

Section / Page	Recommendation	How to Implement or Improve
Section 3, pg 3	Review / revise section 220 of City Code (trees) to make it an effective tool for accomplishing goals of UCFMP*	Follow the UCFMP's draft revision of section 220; include street trees and landscaping requirements in zoning to match goals of UCFMP.
Section 5, pg 4	Update Transect Zone Design	Review / revise code to reflect urban forestry best practices, green infrastructure, and complete streets standards.
Section 5, pg 4	Update Public Water Supply and Wetland Protection District, and Watercourse Protection District	Update sections as needed to reflect the important role of trees and vegetation as part of city's green infrastructure and riparian buffer system.
Section 5, pg 4	Update Special Use Permit	Review / revise to include assessment of existing trees and environmental resources of the site which should be maintained; trees as a buffer function or mitigating impacts.
Section 3.5, pg 4	Update Site Plan Review	Review / revise and expand to include more provisions for preservation of existing trees; planting new trees; landscaping standards.
Section 3.5, pg 4	Update Land Disturbance	Review / revise in context of current site prep / construction best practices and DEC stormwater guidelines, with special provisions to protect trees in ROW.
Section 3.5, pg 5	Update Historic Review	Review / revise to clarify and specify the extent to which Historic Review section affects existing trees in historic district.
Section 3.5, pg 5	Update Parking Requirements	Review / revise references made to 'open space', 'landscaping', 'clearing', 'natural resources', etc. to clarify and enhance specific regulations; provide landscaping standards for parking lots.
Section 3.5, pg 5	Update Planned Unit Developments	Review / revise references made to 'open space', 'landscaping', 'clearing', 'natural resources', etc. to clarify and enhance specific regulations.

Section / Page	Recommendation	How to Implement or Improve
Section 3.6, pg 5-6	Update Subdivision Regulations and consolidate with provisions of the UDO with goal of preserving and expanding the urban forest	Follow the UCFMP's draft revision of the subdivision regulations and make sure changes are synced with other areas of the city code and the UDO.
Section 3.8, pg 6	Revise standard construction / tree planting details to conform to current industry best practices	Review UCFMP recommendations for updates to standard details, coordinate with city.
Section 4.1 C, pg 10	Revise standard details and code to establish standards to allow for greater sidewalk design flexibility	Provide street details which provide adequate tree belt planting widths, flexibility in sidewalk design; alternate pavement designs; structural soil; stormwater best practices, etc.

When the UCFMP was written, it provided very specific steps and changes to the existing city code. At that time, it was not known the city would be working to develop a UDO. It is now generally recommended that the current city code Chapter 220 – Trees could be incorporated entirely into the new UDO code as part of the general urban forest requirements. This would provide guidance on future landscaping, street trees and maintenance of existing foliage within one document.

The UDO can assimilate several elements into a more cohesive set of urban forestry and landscape design guidelines. These guidelines can help refine, clarify and integrate the design intent of the city's transect zones, tree code, Urban and Community Forestry Master Plan, complete streets policy and related studies.

2012 Complete Streets Policy

Adopted May of 2012, the Complete Streets policy sought to identify specific ways which the streets and roads of Saratoga Springs could be improved over time to enhance and provide transportation options to multi-modal transportations systems, including walking and bicycling.

The final Complete Streets plan is currently in progress. The UDO development team will be working in parallel with that effort to incorporate the details of the Complete Streets designs into the new code as it is established.

Page	Recommendation	How to Implement or Improve
pg 7	Requirements for defined pedestrian and bicycle spaces, specific sidewalk requirements, street trees, benches, pedestrian scale lighting, transit stop shelters, bike racks, etc.	Incorporate recommendations as part of new street design standards. Provide graphic design guidelines depicting new goals and requirements for street improvements.
pg 7	Maintain compact land use pattern	Strengthen and maintain land use policy of urbanized downtown with surrounding greenbelt; minimize potential for sprawl.
pg 9	Focus growth downtown	Same as above.
pg 9	Encourage non-vehicular traffic	Conversely, use parking regulations to discourage excess vehicular traffic.
pg 9	Complete Streets checklists should be completed by project sponsors for all municipal and private projects that impact city streets	Include checklists as part of new code. Checklist could be used in code and for review of private development projects by the land use boards.
pg 10	Identify current regulations in the UDO and provide recommendations and amendments to enhance guidelines	Incorporate design concepts into new street standards; review 'Shared Access Saratoga's 2011 Complete Streets Policy Audit'.
pg 12	Enforcement of complete streets policy	Define criteria in code where complete streets requirements or goals must be met via street reconstruction or transitional improvements over time.

2006 Building Heights Study

In 2006, BFJ Planning conducted a study of building heights in the core downtown areas of the city to assess the current allowable building heights in comparison to the heights of the existing buildings, and what it may look like if the full heights were achieved. The study identified a range of options for building heights which were more contextual to individual streets, based on relative width to height ratios. Based on the findings of the study, some reduced building heights were suggested on narrower streets to more closely align with a desired 1:1 ratio. Additional suggestions were made with regard to providing some variability in building or facade height to maintain a more interesting character, or to emphasize corner conditions.

The options suggested in the study will be considered for inclusion in the code, specifically with regard to the extent to which these would be applicable to form-based codes and design guidelines in some of the transect zones.

2002 Open Space Plan

Adopted by the city in 2002, the Open Space Plan identified goals and strategies to protect valuable natural resources and open space areas throughout the city.

Page	Recommendation	How to Implement or Improve
pg 7	Preserve greenbelt via Conservation Development District (CDD)	Maintain Rural Residential (RR) zoning strategy; require preservation of open space resources via conservation subdivision, amenity zoning and other tools; provide guidance on creative site design.
pg 8	Maintain concept of CDD	Maintain base density of one home per two acres, variable lot sizes, flexible area and bulk requirements; clustered homes using conservation subdivision; density bonuses as incentive for public access / open space / trail provisions.
pg 16	Preserve specific farms identified in the Open Space & Recreation Resources map	Provide guidance information on purchase of development rights (PDR) strategies; amenity zoning strategies.
pg 17	Protect agricultural heritage areas even as development occurs	Use creative subdivision design process outlined for CDD in the comprehensive plan.
pg 17	Avoid development on steep slopes	Review and clarify definition of steep slopes, remove from development area as part of conservation subdivision design.
pg 18	Strengthen stream and buffer requirements	Increase watercourse development buffer from 50’ to 100'; limit soil disturbance activities and require substantial vegetative buffer (no cutting) within 75' of stream.
Pg 18	Strengthen stream and buffer requirements	Indicate watercourse protection overlay areas on zoning map.
pg 18	Increase recreational facilities	Review Open Space and Recreation Resources map for specific areas to be considered for recreation land; utilize amenity zoning to help promote additional recreational areas.
pg 19	Maintain character of specific rural and scenic roads	Consider reasonable landscaping and design standards for future development along scenic routes; encourage clustering or redirecting development away from roadside; consider identifying scenic roads on zoning map.
pg 19	Specific areas for potential rezoning - rural or scenic roads and vistas	Review Open Space and Recreation Resources map for specific areas to be considered for open space zoning.
pg 20	Scenic rural roads guidelines	Develop reasonable landscaping and design standards for roadside areas along identified scenic routes; identify scenic routes on zoning map; sync guidelines of city and county DPW, NYSDOT and improve guidelines for treatment of rural roads.

Page	Recommendation	How to Implement or Improve
pg 20	2 types of gateway areas: primarily undeveloped, and special mixed-use 'gateway' development	Provide basic design and landscaping standards for gateway zoning districts.
pg 20	Improve site design and architecture of development through design standards	Create design guidelines for pedestrian and bike connections, parking buffering, architecture and signage, access consolidation, etc.
pg 21	Increase waterfront access	Utilize amenity zoning to help establish future waterfront access.
pg 24	Trail linkages through easements from willing landowners	Provide incentives in the CDD for providing public access to conservation lands and assistance in development of trails; show existing and future trail connection on zoning map.

2001 A Working Plan for Historic Preservation

Adopted in November of 2001, *A Working Plan for Historic Preservation* outlined strategies to protect the historic architectural resources of the city which contribute and enhance its character. Each of the items below was reviewed to see how it could be further implemented in the new UDO code.

Section / Page	Recommendation	How to Implement or Improve
Section VII - 1.1.1, pg 15	Articulate a consistent vision for historic preservation	Incorporate historic district design guidelines into code; provide guidance for historic preservation.
Section VII - 1.2.3, pg 16	Implement a way-finding / sign plan for heritage tourism sites throughout the city	Coordinate with current city effort to establish wayfinding system; incorporate wayfinding system into code.
Section VII - 1.2.4, pg 16	Develop a display program for downtown buildings and streetscapes. Using a standard format, show a historic photo of the original building with reader-friendly written explanations.	
Section VII - 1.3.2, pg 17	Develop brochures to clarify all archaeological standards and procedures for contractors and provide accurate information as to timeliness of digs and penalties for failure to comply.	Refer to archaeological procedures in code to increase awareness, refer to New York's State Historic Preservation Office (*SHPO*) information.
Section VII - 2.1.2, pg 19	Revisit Articles VII and VIII of the City's Zoning Ordinance to update and strengthen the design criteria for designated buildings and districts.	Review section 7.4 and 7.5 of the zoning code; update and clarify design criteria for Design Review Commission (DRC) applications; provide design review guidance.
Section VII - 2.1.3, pg 19	Require public notice to neighboring property owners for projects coming before the Design Review Commission	Augment and improve the notification procedures for development review applications.
Section VII - 2.1.4, pg 19	Heighten the importance of historic preservation as the basis for regulatory review.	Clarify intent and objectives of historic review process; rename the DRC the Historic Preservation and Design Review Commission.
Section VII - 2.1.5, pg 19	Enact local legislation that requires the City of Saratoga Springs to conform to all historic preservation regulations and processes applicable to private property owners.	Clarify code intent that provisions of historic preservation and design standards apply to municipal projects.

Section / Page	Recommendation	How to Implement or Improve
Section VII - 2.1.8, pg 19	Ensure that historic buildings are not demolished or compromised to provide parking.	Review and strengthen existing language and procedures related to demolition; provide checklists or determining criteria necessary for demolition permit.
Section VII - 2.1.10, pg 19	Review all potentially significant buildings prior to demolition and protect them while alternatives to demolition are sought.	Revise current procedures to enact a 30-day review period for demolition applications.
Section VII - 2.2.4, pg 19	Adopt specific language that requires the Zoning Board of Appeals (ZBA) to make findings of hardship on appeals of DRC decisions, and provide special training for ZBA members who conduct such appeals.	Provide additional criteria and review guidance for historic review applications to assist in the review process; require written findings statement from the ZBA for significant decisions; set threshold for significant decisions; ensure public is adequately notified of significant decisions.
Section VII - 2.3.4, pg 20	Ensure that roadway projects are implemented using state-of-the-art "context sensitive design" techniques that respect the historic fabric of the community.	Incorporate historic considerations into street standards; include context-based considerations when applying a “generic” street standard to a specific street.
Section VII - 2.4.1, pg 20	Expand the National and State Register of Historic Districts and the City's Historic zoning district.	Review the existing boundaries of historic districts and consider expansions and adjustments to align with established areas; review West Side historic district; illustrate historic districts on zoning map instead of on a separate map.
Section VII - 2.4.2, pg 21	Include all properties on, and eligible for, the State and National Register of Historic Places in the City's Historic Zoning District.	Review the existing boundaries of historic districts and consider expansions and adjustments to align with established areas; consider identifying specific historic properties outside of the historic districts-if necessary-on the zoning map to increase awareness during reviews.
Section VII - 2.4.3, 2.3.4, pg 21	Look for additional undocumented historic properties	Review historic district boundaries and historic properties with Preservation Foundation and other groups to update data and verify accuracy.
Section VII - 2.4.5, pg 21	Assess areas peripheral to National Register Districts for possible designation as "Conservation Districts" for buffering purposes	Investigate potential for provision in new code which provides additional protections, buffers or design considerations for applications adjacent to historic properties; alternately, consider expanding historic zoning area to include a new zone for buffering purposes.
Section VII - 2.6.1, pg 23	Protect historic landscapes and vistas important to the community	Include protection measures for historic trees.
Section VII - 2.7.3, pg 23	Develop new sign guidelines and ordinance revisions that are more sensitive to applications on historic buildings and within historic vistas.	Review, clarify and improve existing sign standards; consider a provision for signs on identified historic structures which provides additional direction by DRC to consider historic context.
Section VII - 2.7.4, pg 23	Develop color guidelines and procedures for review of exterior color changes on historic properties.	Review existing criteria on color selections, consider edits to code language which would clarify or provide guidance on appropriate selections.

Section / Page	Recommendation	How to Implement or Improve
Section VII - 2.7.5, pg 23	Develop specific zoning and preservation standards that address the aesthetic and planning issues of "big box" development	Provide additional design standards, form-based code and desired development examples.
Section VII - 2.7.6, pg 23	Develop design guidelines for streetscapes in the downtown area and in the residential historic districts	Provide street standards which direct the design of different types of streets found within the city.
Section VII - 2.7.7, pg 23	Eliminate conflicting policies, such as zoning districts that allow development which is out of character with extant historic buildings	Provide intent, basic principles, guidelines and examples of desired development for each zoning district which would serve to assist in the design review process and inform the reviewing boards in how to achieve the correct character of development that is in keeping with local context.
Section VII - 2.7.8, pg 23	Increase penalties for violations of preservation, zoning and design review regulations sufficient to encourage compliance	Review existing penalties and enforcement procedures in code; consider revisions which would strengthen code and increase compliance.
Section VII - 2.7.9, pg 23	Institute a variety of enforcement mechanisms for specified conditions and incorporate into City codes	Review existing penalties and enforcement procedures in code; consider revisions which would strengthen code and increase compliance; consider performance bonds to ensure compliance with conditions placed on various design review and development approvals.
Section VII - 2.7.10, pg 23	Develop a uniform checklist to aid applicants in tracking their requests as they are being processed and highlight where actions can be taken concurrently	Provide a review and approval flow chart in code to clarify process for applicants; update application checklists; it is recommended that the city establish new procedures (outside of the purview of the code) which would improve the tracking and notification of applications.
Section VII - 2.7.11, pg 23	Examine all review processes to see where they overlap and could be streamlined	Revise process where reviews could be conducted concurrently, simplify where necessary to guard against possible 'catch 22' situations for property owners.
Section VII - 2.9.1, pg 25	Strengthen oversight activities having impacts on archaeological sites.	Review land disturbance code and consider changes to increase awareness of archaeological considerations; increase penalties for clearing or digging without required permits.
Section VII - 2.9.2, pg 25	Develop specific standards and guidelines for archaeological review requirements in historic districts and other archaeologically sensitive areas.	

Conclusion

Final Thoughts and Next Steps

This Diagnosis Report evaluates the efficiency and effectiveness of the zoning ordinance, how well it is equipped to implement the 2015 Comprehensive Plan as well as other City adopted plans and policies, and provides an assessment of usability and clarity. This step was designed to enable a discussion—and eventual consensus—on the necessary course of action prior to drafting any new codes. Part Two of this report is numbered so that the City Council and the larger community can track identified issues and potential solutions, provide input to the direction on priority strategies and changes which should be pursued moving forward.

After City Council review, the next step is to develop a detailed outline of how the UDO may be structured, organized and designed to provide a guidance document which is both informative and effective for residents, applicants and city officials alike.

After the structure of the UDO is established, work will begin on compiling the various relevant policy documents and recommended changes into a first draft document for public review. To gain consensus and provide transparency into the process, a public meeting will be scheduled to discuss the draft code and begin a more detailed discussion on specific community interests.

Additional drafts of the proposed UDO will be developed, revised and published over the course of the project as it approaches final adoption, during which point there will be public hearings and land use board reviews.

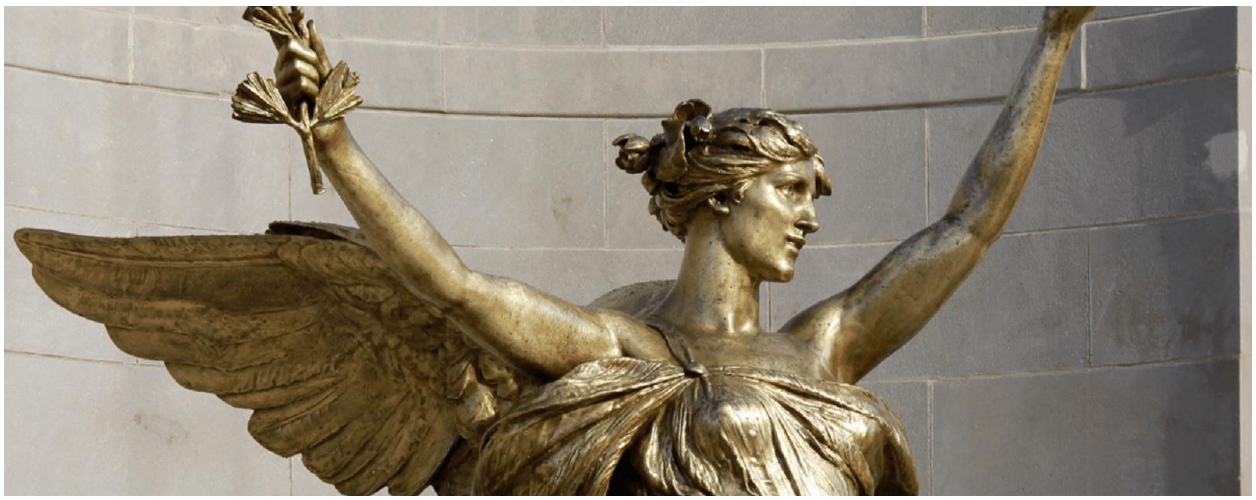

CITY OF SARATOGA SPRINGS

DESIGN REVIEW COMMISSION

CITY HALL - 474 BROADWAY
SARATOGA SPRINGS, NEW YORK 12866
TEL: 518-587-3550 x.515 FAX: 518-580-9480
WWW.SARATOGA-SPRINGS.ORG

Office use only
Date Rec'd: _____
Application #: _____
Check #: _____
Amount: $_____

APPLICATION FOR: ARCHITECTURAL / HISTORIC REVIEW

(Rev: 1/4/11)

	APPLICANT(S)*	OWNER(S) *(If not applicant)*	AGENT(S)
Name	James and Sons Tobacconists	Southgate Broadway 360LLC	ADIRONDACK SIGN CO
Address	360 Broadway	12 Racket Ln	72 BALLSTON AVE
	SARATOGA SPRINGS, NY 12866	Essex, CT 06426	SARATOGA SPRINGS, NY 12866
Tel./Fax	[redacted]	/	[redacted]
Email	[redacted]		[redacted]

Identify primary contact person: ☐ Applicant ☐ Owner ☒ Agent

* An applicant must be the property owner, lessee, or one with an option to lease or purchase the subject property.
Identify the applicant's interest in premises: ☐ Owner ☒ Lessee ☐ Under option to lease or purchase

Property Address (# & St.): 360 Broadway Tax Parcel #: 165 . 67 - 2 - 1
(*for example: 165.52 – 4 – 37*)

Current Zoning District: T-6 Property use: ☐ Residential ☒ Non-residential/mixed-use

Type of Review: ☒ Architectural ☐ Historic ☐ Extension/modification (of current approval)

Summary description of proposed action:

Fabricate and Install 1.5" thick HDU lettering. Color will be Black
Mounting will be pin mounted into the building facade over doorway.

Has a previous application been filed with the DRC for this property? ☒ No ☐ Yes – date(s)? _____

Application fee (payable to "Commissioner of Finance"): **Combined Application for Historic and Architectural Review:**

Residential Structures (principal, accessory)	$25	Non-residential / mixed-use structures (principal)	$300
Residential approval – extension	$25	Non-residential signs, awnings, accessory structures	$100
Residential - administrative action	$25	Non-residential approval – extension	$100
		Non-residential - administrative action	$100

A "complete" application consists of 1 original and 9 collated sets of application & other materials as required below:

New Construction / Additions

- ☐ Color photographs showing site/exterior details of existing structures and adjacent properties
- ☐ Site plan, drawn to scale, showing existing & proposed construction, property lines & dimensions, required & proposed setbacks & lot coverage, site features (fences, walks, trees, etc.); on no larger than 2'x3' sheet – smaller preferred if legible
- ☐ Elevation drawings showing design of all sides of existing & proposed construction – label dimensions, colors, materials, lighting (fixture & lamp type, wattage), etc. - include compass bearing & scale; no larger than 2'x3' sheet – smaller permitted if legible
- ☐ Floor plans for proposed structure; on sheet no larger than 2'x3' – smaller permitted if legible
- ☐ Product literature, specifications and samples of proposed materials and colors

Change in exterior building materials (windows, doors, roof, siding, etc.), or color (in non-residential districts only)

- ☐ Color photographs showing site/exterior details of existing structures and that illustrate affected features
- ☐ Elevation drawings showing all sides of existing & proposed construction – label dimensions, colors, materials, lighting (fixture & lamp type, wattage), etc. - include compass bearing & scale; no larger than 2'x3' sheet – smaller permitted if legible
- ☐ Product literature, specifications and samples of proposed materials and colors

Within front yard setbacks in Historic Districts only (Front setbacks: UR-1 & INST-HTR=30'; UR-4=25'; UR-2, UR-3 & NCUD-1=10')

- Installation, removal or change in material of drive- and walkways
- Installation or removal of architectural, sculptural or vegetative screening over 3' in height
- Installation of accessory utility structures or radio/satellite transmission/reception devices (more than 2' diameter)

For any of above:

- ☐ Color photographs showing site/exterior details of existing structures, and of adjacent properties
- ☐ Site plan showing existing & proposed construction: include property lines & dimensions, required & proposed setbacks & lotcoverage, site features (fences, walks, trees, etc.) street names, compass bearing & scale; no larger than 2'x3' sheet – smaller preferred if legible
- ☐ Product literature, specifications and samples of proposed materials and colors

Signage / Awnings

- ☐ Color photographs showing site/exterior details of existing structures, and adjacent properties
- ☐ Plan showing location of proposed sign/awning structure on building/premises: no larger than 11"x17"
- ☐ Scaled illustration of proposed sign/awning structure and lettering (front view & profile): include all dimensions of structure; type, dimensions and style of lettering or logo; description of colors, materials, mounting method and hardware
- ☐ Descriptions, specifications of proposed lighting including fixture & lamp type, wattage, mounting method, and location
- ☐ Product literature, specifications and samples of proposed materials and colors

Demolition

- ☐ Color photographs showing site/exterior details of existing structures, and of adjacent properties
- ☐ Site plan showing existing and any proposed structures - include dimensions, setbacks, street names, compass bearing, and scale
- ☐ Written description of reasons for demolition and, in addition:
  - ☐ For structures of "architectural/historical significance", demonstrate "good cause" why structure cannot be preserved
  - ☐ For structures in an architectural district that might be eligible for listing on National Register of Historic Places, or for a "contributing" structure in a National Register district (contact City staff), provide plans for site development following demolition - include a timetable and letter of credit for project completion

Telecommunication facilities

- ☐ Color photographs showing site/existing structures, and of adjacent properties
- ☐ Site plan showing existing and proposed structures: include dimensions, setbacks, street names, compass bearing, and scale
- ☐ Scaled illustration of proposed structures: include all dimensions; colors, materials, lighting, mounting details
- ☐ Consult Article 240-12.22 of the City's Zoning Ordinance and City staff to ensure compliance with requirements for visual impact assessment and existing and proposed vegetative screening

Request for extension of current approval

- ☐ Identify date of original DRC approval: _____ Current expiration date: _____
- ☐ Describe why this extension is necessary and whether any significant changes have occurred either on the site or in the neighborhood.

SEQR Environmental Assessment Form (attached)

☐ Applicants proposing the following must complete "Part I" of the attached SEQR Short Environmental Assessment Form:

- Construction or expansion of a multi-family residential structure (4 units +)
- Construction or expansion (exceeding 4,000 sq. ft. gross floor area) of a principal or accessory non-residential structure
- Telecommunications facility, radio antennae, satellite dishes
- Demolition

Applicant / Owner Disclosure and Signature

Does any City officer, employee or family member thereof have a financial interest (as defined by General Municipal Law Section 809) in this application? ☐ No ☐ Yes - If yes, a statement disclosing the name, residence, nature, and extent of this interest must be filed with this application.

I, the undersigned, the owner, purchaser under contract, or lessee of the property, hereby request approval by the Design Review Commission for review approval relating to the above-identified property. I agree to meet all requirements under Article VII for Historic Review or Article VIII for Architectural Review of the Zoning Code of the City of Saratoga Springs.

Signature: _____ Date: _____

If applicant is lessee, owner must also sign.

Signature: _____ Date: _____

FOR OFFICE USE ONLY

This application has been reviewed by the Zoning Enforcement Officer and is being forwarded to the Commission.

Signature: _____ Date: _____

Additional Comments: _____

_____

_____

_____

_____

_____

_____

_____

_____

PROJECT I.D. NUMBER

617.20
Appendix C
State Environmental Quality Review

SEQR

SHORT ENVIRONMENTAL ASSESSMENT FORM

For UNLISTED ACTIONS Only

PART 1 – PROJECT INFORMATION (To be completed by Applicant or Project Sponsor)

1. APPLICANT/SPONSOR	2. PROJECT NAME

3. PROJECT LOCATION
Municipality: County:

4. PRECISE LOCATION (Street address and road intersections, prominent landmarks, etc. or provide map)

5. IS PROPOSED ACTION:
☐ New ☐ Expansion ☐ Modification/alteration

6. DESCRIBE PROJECT BRIEFLY:

7. AMOUNT OF LAND AFFECTED:
Initially _____ acres Ultimately _____ acres

8. WILL PROPOSED ACTION COMPLY WITH EXISTING ZONING OR OTHER LAND USE RESTRICTIONS?
☐ Yes ☐ No If No, describe briefly

9. WHAT IS PRESENT LAND USE IN VICINITY OF PROJECT?
☐ Residential ☐ Industrial ☐ Commercial ☐ Agriculture ☐ Park/Forest/Open Space ☐ Other
Describe:

10. DOES ACTION INVOLVE A PERMIT APPROVAL, OR FUNDING, NOW OR ULTIMATELY FROM ANY OTHER GOVERNMENTAL AGENCY (FEDERAL, STATE OR LOCAL)?
☐ Yes ☐ No If Yes, list agency(s) name and permit/approvals

11. DOES ANY ASPECT OF THE ACTION HAVE A CURRENTLY VALID PERMIT OR APPROVAL?
☐ Yes ☐ No If Yes, list agency name and permit/approval

12. AS A RESULT OF PROPOSED ACTION WILL EXISTING PERMIT/APPROVAL REQUIRE MODIFICATION?
☐ Yes ☐ No

I CERTIFY THAT THE INFORMATION PROVIDED ABOVE IS TRUE TO THE BEST OF MY KNOWLEDGE

Applicant/sponsor name: _____ Date: _____

Signature: _____

CONTINUED

PART 11 – ENVIRONMENTAL ASSESSMENT (To be completed by Agency)

A. DOES ACTION EXCEED ANY TYPE 1 THRESHOLD IN 6 NYCRR, PART 617.4? If yes, coordinate the review process and use the FULL EAF

☐ Yes ☐ No

B. WILL ACTION RECEIVE COORDINATED REVIEW AS PROVIDED FOR UNLISTED ACTIONS IN 6 NYCRR 617.6? If No, a negative declaration may be superseded by another involved agency.

☐ Yes ☐ No

C. COULD ACTION RESULT IN ANY ADVERSE EFFECTS ASSOCIATED WITH THE FOLLOWING: (Answers may be handwritten if legible)

C1. Existing air quality, surface or groundwater quality or quantity, noise levels, existing traffic patterns, solid waste production or disposal, potential for erosion, drainage or flooding problems? Explain briefly:

C2. Aesthetic, agricultural, archaeological, historic or other natural or cultural resources, or community or neighborhood character? Explain briefly.

C3. Vegetation or fauna, fish, shellfish or wildlife species, significant habitats, or threatened or endangered species? Explain briefly.

C4. A community's existing plans or goals as officially adopted, or a change in use or intensity of use of land or other natural resources? Explain briefly.

C5. Growth, subsequent development, or related activities likely to be induced by the proposed action? Explain briefly.

C6. Long turn, short term, cumulative, or other effects not identified in C1-C5? Explain briefly.

C7. Other impacts (including changes in use of either quantity or type of energy)? Explain briefly.

D. WILL THE PROJECT HAVE AN IMPACT ON THE ENVIRONMENTAL CHARACTERISTICS THAT CAUSED THE ESTABLISHMENT OF A CEA?

☐ Yes ☐ No

E. IS THERE, OR IS THERE LIKELY TO BE, CONTROVERSY RELATED TO POTENTIAL ADVERSE ENVIRONMENTAL IMPACTS?

☐ Yes ☐ No If Yes, explain briefly.

PART 111 – DETERMINATION OF SIGNIFICANCE (To be completed by Agency)

INSTRUCTIONS: For each adverse effect identified above, determine whether it is substantial, large, important or otherwise significant. Each effect should be assessed in connection with its (a) setting (i.e. urban or rural); (b) probability of occurring;; (c) duration; (d) irreversibility; (e) geographic scope; and (f) magnitude. If necessary, add attachments or reference supporting materials. Ensure that explanations contain sufficient detail to show that all relevant adverse impacts have been identified and adequately addressed. If question D of Part 11 wash checked yes, the determination and significance must evaluate the potential impact of the proposed action on the environmental characteristics of the CEA.

☐ Check this box if you have identified one or more potentially large or significant adverse impacts which MAY occur. Then proceed directly to the FULL EAF and/or prepare a positive declaration.

☐ Check this box if you have determined, based on the information and analysis above and any supporting documentation, that the proposed action WILL NOT result in any significant adverse environmental impacts AND provide on attachments as necessary, the reasons supporting this determination:

_____

Name of Lead Agency

_____ _____

Print or Type Name of Responsible Officer in Lead Agency | Title of Responsible Officer

_____ _____

Signature of Responsible Officer in Lead Agency | Signature of Preparer (If different from responsible officer)

_____

Date

DRC

SEQR Environmental Assessment Form (attached)

☐ Applicants proposing the following must complete "Part I" of the attached SEQR Short Environmental Assessment Form:
- Construction or expansion of a multi-family residential structure (4 units +)
- Construction or expansion (exceeding 4,000 sq. ft. gross floor area) of a principal or accessory non-residential structure
- Telecommunications facility, radio antennae, satellite dishes
- Demolition

Applicant / Owner Disclosure and Signature

Does any City officer, employee or family member thereof have a financial interest (as defined by General Municipal Law Section 809) in this application? ☒ No ☐ Yes - If yes, a statement disclosing the name, residence, nature, and extent of this interest must be filed with this application.

I, the undersigned, the owner, purchaser under contract, or lessee of the property, hereby request approval by the Design Review Commission for review approval relating to the above-identified property. I agree to meet all requirements under Article VII for Historic Review or Article VIII for Architectural Review of the Zoning Code of the City of Saratoga Springs.

Signature: _____ Date: _____

If applicant is lessee, owner must also sign.

Signature: James L. Kommer Date: _____

FOR OFFICE USE ONLY

This application has been reviewed by the Zoning Enforcement Officer and is being forwarded to the Commission.

Signature: _____ Date: _____

Additional Comments: _____

JAMES & SONS TOBACCONISTS

9.5"

7.75"

- Lettering to be pin mounted to facade
- 1.5" thick HDU painted black
- Overall size is 9.5" x 175.5"

This proof is not submitted for color approval or print quality. Please proof read carefully upon receipt. Colors viewed on monitors may vary slightly from actual colors in final production. If color critical, please provide accurate color samples (ie: pantone, paint swatches, etc.) Signed proofs indicate review and acceptance of the proof. Once proof is signed and returned with approval, we are not responsible for any discrepancies regarding color, spelling or materials used in production.

PROOFS MUST BE SIGNED AND RETURNED VIA EMAIL OR FAX BEFORE PROCEEDING

ADIRONDACK SIGN COMPANY
72 Ballston Ave., Saratoga Springs, NY 12866
[redacted]
www.AdkSignCo.com

Customer: James & Sons Tobacconists
Project Name: Building Lettering
Designer: RD
Date: 7/22/16
Rev Date:

Approved As Is: _____
Signature/Date

Approved with Corrections;
no further proof needed: _____

Revisions Required; New proof needed: _____

This proof is not submitted for color approval or print quality. Please proof read carefully upon receipt. Colors viewed on monitors may vary slightly from actual colors in final production. If color critical, please provide accurate color samples (ie: pantone, paint swatches, etc.) Signed proofs indicate review and acceptance of the proof. Once proof is signed and returned with approval, we are not responsible for any discrepancies regarding color, spelling or materials used in production.

PROOFS MUST BE SIGNED AND RETURNED VIA EMAIL OR FAX BEFORE PROCEEDING

ADIRONDACK SIGN COMPANY
72 Ballston Ave., Saratoga Springs, NY 12866
[redacted]
www.AdkSignCo.com

Customer: James & Sons Tobacconists
Project Name: Building Lettering
Designer: RD
Date: 7/22/16
Rev Date:

Approved As Is: _____
Signature/Date

Approved with Corrections; no further proof needed: _____

Revisions Required; New proof needed: _____

CITY OF SARATOGA SPRINGS

DESIGN REVIEW COMMISSION

CITY HALL - 474 BROADWAY
SARATOGA SPRINGS, NEW YORK 12866
TEL: 518-587-3550 x.515 FAX: 518-580-9480
WWW.SARATOGA-SPRINGS.ORG

Office use only
Date Rec'd: _____
Application #: _____
Check #: _____
Amount: $_____

APPLICATION FOR:
ARCHITECTURAL / HISTORIC REVIEW

(Rev: 1/4/11)

	APPLICANT(S)*	OWNER(S) *(If not applicant)*	AGENT(S)
Name	Carpe Diem Real, Properties LLC	Carpe Diem Real, Properties LLC	ADIRONDACK SIGN CO
Address	489 Broadway	PO Box 304	72 BALLSTON AVE
	SARATOGA SPRINGS, NY 12866	Chestertown, NY 12817	SARATOGA SPRINGS, NY 12866
Tel./Fax	[redacted]	[redacted]	[redacted]
Email	[redacted]	[redacted]	[redacted]

Identify primary contact person: ☐ Applicant ☐ Owner ☒ Agent

* An applicant must be the property owner, lessee, or one with an option to lease or purchase the subject property.
Identify the applicant's interest in premises: ☒ Owner ☐ Lessee ☐ Under option to lease or purchase

Property Address (# & St.): 489 Broadway Tax Parcel #: 165 . 51 - 3 - 21
(*for example: 165.52 – 4 – 37*)

Current Zoning District: T-6 Property use: ☐ Residential ☒ Non-residential/mixed-use

Type of Review: ☒ Architectural ☐ Historic ☐ Extension/modification (of current approval)

Summary description of proposed action: Fabrication and install of sign panels for install onto sign band . Inner sign panel will be 3MM silver dibond with prismatic cut lettering and painted brillant Gold. Letters will be 1" HDU and mounted onto backer with industrial adhesive. There will be three panels.
Frontage 26.5' with sign total of 36.7 sq ft.
Approved building permit attached for sign band and location.

Has a previous application been filed with the DRC for this property? ☐ No ☒ Yes – date(s)? 2013?

Application fee (payable to "Commissioner of Finance"): **Combined Application for Historic and Architectural Review:**

Residential Structures (principal, accessory)	$25	Non-residential / mixed-use structures (principal)	$300
Residential approval – extension	$25	Non-residential signs, awnings, accessory structures	$100
Residential - administrative action	$25	Non-residential approval – extension	$100
		Non-residential - administrative action	$100

A "complete" application consists of 1 original and 9 collated sets of application & other materials as required below:

New Construction / Additions

- ☐ Color photographs showing site/exterior details of existing structures and adjacent properties
- ☐ Site plan, drawn to scale, showing existing & proposed construction, property lines & dimensions, required & proposed setbacks & lot coverage, site features (fences, walks, trees, etc.); on no larger than 2'x3' sheet – smaller preferred if legible
- ☐ Elevation drawings showing design of all sides of existing & proposed construction – label dimensions, colors, materials, lighting (fixture & lamp type, wattage), etc. - include compass bearing & scale; no larger than 2'x3' sheet – smaller permitted if legible
- ☐ Floor plans for proposed structure; on sheet no larger than 2'x3' – smaller permitted if legible
- ☐ Product literature, specifications and samples of proposed materials and colors

Change in exterior building materials (windows, doors, roof, siding, etc.), or color (in non-residential districts only)

- ☐ Color photographs showing site/exterior details of existing structures and that illustrate affected features
- ☐ Elevation drawings showing all sides of existing & proposed construction – label dimensions, colors, materials, lighting (fixture & lamp type, wattage), etc. - include compass bearing & scale; no larger than 2'x3' sheet – smaller permitted if legible
- ☐ Product literature, specifications and samples of proposed materials and colors

Within front yard setbacks in Historic Districts only (Front setbacks: UR-1 & INST-HTR=30'; UR-4=25'; UR-2, UR-3 & NCUD-1=10')

- Installation, removal or change in material of drive- and walkways
- Installation or removal of architectural, sculptural or vegetative screening over 3' in height
- Installation of accessory utility structures or radio/satellite transmission/reception devices (more than 2' diameter)

For any of above:

- ☐ Color photographs showing site/exterior details of existing structures, and of adjacent properties
- ☐ Site plan showing existing & proposed construction: include property lines & dimensions, required & proposed setbacks & lotcoverage, site features (fences, walks, trees, etc.) street names, compass bearing & scale; no larger than 2'x3' sheet – smaller preferred if legible
- ☐ Product literature, specifications and samples of proposed materials and colors

Signage / Awnings

- ☐ Color photographs showing site/exterior details of existing structures, and adjacent properties
- ☐ Plan showing location of proposed sign/awning structure on building/premises: no larger than 11"x17"
- ☐ Scaled illustration of proposed sign/awning structure and lettering (front view & profile): include all dimensions of structure; type, dimensions and style of lettering or logo; description of colors, materials, mounting method and hardware
- ☐ Descriptions, specifications of proposed lighting including fixture & lamp type, wattage, mounting method, and location
- ☐ Product literature, specifications and samples of proposed materials and colors

Demolition

- ☐ Color photographs showing site/exterior details of existing structures, and of adjacent properties
- ☐ Site plan showing existing and any proposed structures - include dimensions, setbacks, street names, compass bearing, and scale
- ☐ Written description of reasons for demolition and, in addition:
  - ☐ For structures of "architectural/historical significance", demonstrate "good cause" why structure cannot be preserved
  - ☐ For structures in an architectural district that might be eligible for listing on National Register of Historic Places, or for a "contributing" structure in a National Register district (contact City staff), provide plans for site development following demolition - include a timetable and letter of credit for project completion

Telecommunication facilities

- ☐ Color photographs showing site/existing structures, and of adjacent properties
- ☐ Site plan showing existing and proposed structures: include dimensions, setbacks, street names, compass bearing, and scale
- ☐ Scaled illustration of proposed structures: include all dimensions; colors, materials, lighting, mounting details
- ☐ Consult Article 240-12.22 of the City's Zoning Ordinance and City staff to ensure compliance with requirements for visual impact assessment and existing and proposed vegetative screening

Request for extension of current approval

- ☐ Identify date of original DRC approval: _____ Current expiration date: _____
- ☐ Describe why this extension is necessary and whether any significant changes have occurred either on the site or in the neighborhood.

SEQR Environmental Assessment Form (attached)

☐ Applicants proposing the following must complete "Part I" of the attached SEQR Short Environmental Assessment Form:

- Construction or expansion of a multi-family residential structure (4 units +)
- Construction or expansion (exceeding 4,000 sq. ft. gross floor area) of a principal or accessory non-residential structure
- Telecommunications facility, radio antennae, satellite dishes
- Demolition

Applicant / Owner Disclosure and Signature

Does any City officer, employee or family member thereof have a financial interest (as defined by General Municipal Law Section 809) in this application? ☐ No ☐ Yes - If yes, a statement disclosing the name, residence, nature, and extent of this interest must be filed with this application.

I, the undersigned, the owner, purchaser under contract, or lessee of the property, hereby request approval by the Design Review Commission for review approval relating to the above-identified property. I agree to meet all requirements under Article VII for Historic Review or Article VIII for Architectural Review of the Zoning Code of the City of Saratoga Springs.

Signature: _____ Date: _____

If applicant is lessee, owner must also sign.

Signature: _____ Date: _____

FOR OFFICE USE ONLY

This application has been reviewed by the Zoning Enforcement Officer and is being forwarded to the Commission.

Signature: _____ Date: _____

Additional Comments: _____

_____

_____

_____

_____

_____

_____

_____

_____

PROJECT I.D. NUMBER

617.20
Appendix C
State Environmental Quality Review

SEQR

SHORT ENVIRONMENTAL ASSESSMENT FORM

For UNLISTED ACTIONS Only

PART 1 – PROJECT INFORMATION (To be completed by Applicant or Project Sponsor)

1. APPLICANT/SPONSOR	2. PROJECT NAME

3. PROJECT LOCATION
Municipality: County:

4. PRECISE LOCATION (Street address and road intersections, prominent landmarks, etc. or provide map)

5. IS PROPOSED ACTION:
☐ New ☐ Expansion ☐ Modification/alteration

6. DESCRIBE PROJECT BRIEFLY:

7. AMOUNT OF LAND AFFECTED:
Initially _____ acres Ultimately _____ acres

8. WILL PROPOSED ACTION COMPLY WITH EXISTING ZONING OR OTHER LAND USE RESTRICTIONS?
☐ Yes ☐ No If No, describe briefly

9. WHAT IS PRESENT LAND USE IN VICINITY OF PROJECT?
☐ Residential ☐ Industrial ☐ Commercial ☐ Agriculture ☐ Park/Forest/Open Space ☐ Other
Describe:

10. DOES ACTION INVOLVE A PERMIT APPROVAL, OR FUNDING, NOW OR ULTIMATELY FROM ANY OTHER GOVERNMENTAL AGENCY (FEDERAL, STATE OR LOCAL)?
☐ Yes ☐ No If Yes, list agency(s) name and permit/approvals

11. DOES ANY ASPECT OF THE ACTION HAVE A CURRENTLY VALID PERMIT OR APPROVAL?
☐ Yes ☐ No If Yes, list agency name and permit/approval

12. AS A RESULT OF PROPOSED ACTION WILL EXISTING PERMIT/APPROVAL REQUIRE MODIFICATION?
☐ Yes ☐ No

I CERTIFY THAT THE INFORMATION PROVIDED ABOVE IS TRUE TO THE BEST OF MY KNOWLEDGE

Applicant/sponsor name: _____ Date: _____

Signature: _____

CONTINUED

PART 11 – ENVIRONMENTAL ASSESSMENT (To be completed by Agency)

A. DOES ACTION EXCEED ANY TYPE 1 THRESHOLD IN 6 NYCRR, PART 617.4? If yes, coordinate the review process and use the FULL EAF

☐ Yes ☐ No

B. WILL ACTION RECEIVE COORDINATED REVIEW AS PROVIDED FOR UNLISTED ACTIONS IN 6 NYCRR 617.6? If No, a negative declaration may be superseded by another involved agency.

☐ Yes ☐ No

C. COULD ACTION RESULT IN ANY ADVERSE EFFECTS ASSOCIATED WITH THE FOLLOWING: (Answers may be handwritten if legible)

C1. Existing air quality, surface or groundwater quality or quantity, noise levels, existing traffic patterns, solid waste production or disposal, potential for erosion, drainage or flooding problems? Explain briefly:

C2. Aesthetic, agricultural, archaeological, historic or other natural or cultural resources, or community or neighborhood character? Explain briefly.

C3. Vegetation or fauna, fish, shellfish or wildlife species, significant habitats, or threatened or endangered species? Explain briefly.

C4. A community's existing plans or goals as officially adopted, or a change in use or intensity of use of land or other natural resources? Explain briefly.

C5. Growth, subsequent development, or related activities likely to be induced by the proposed action? Explain briefly.

C6. Long turn, short term, cumulative, or other effects not identified in C1-C5? Explain briefly.

C7. Other impacts (including changes in use of either quantity or type of energy)? Explain briefly.

D. WILL THE PROJECT HAVE AN IMPACT ON THE ENVIRONMENTAL CHARACTERISTICS THAT CAUSED THE ESTABLISHMENT OF A CEA?

☐ Yes ☐ No

E. IS THERE, OR IS THERE LIKELY TO BE, CONTROVERSY RELATED TO POTENTIAL ADVERSE ENVIRONMENTAL IMPACTS?

☐ Yes ☐ No If Yes, explain briefly.

PART 111 – DETERMINATION OF SIGNIFICANCE (To be completed by Agency)

INSTRUCTIONS: For each adverse effect identified above, determine whether it is substantial, large, important or otherwise significant. Each effect should be assessed in connection with its (a) setting (i.e. urban or rural); (b) probability of occurring;; (c) duration; (d) irreversibility; (e) geographic scope; and (f) magnitude. If necessary, add attachments or reference supporting materials. Ensure that explanations contain sufficient detail to show that all relevant adverse impacts have been identified and adequately addressed. If question D of Part 11 wash checked yes, the determination and significance must evaluate the potential impact of the proposed action on the environmental characteristics of the CEA.

☐ Check this box if you have identified one or more potentially large or significant adverse impacts which MAY occur. Then proceed directly to the FULL EAF and/or prepare a positive declaration.

☐ Check this box if you have determined, based on the information and analysis above and any supporting documentation, that the proposed action WILL NOT result in any significant adverse environmental impacts AND provide on attachments as necessary, the reasons supporting this determination:

_____

Name of Lead Agency

_____ _____

Print or Type Name of Responsible Officer in Lead Agency | Title of Responsible Officer

_____ _____

Signature of Responsible Officer in Lead Agency | Signature of Preparer (If different from responsible officer)

_____

Date

DRC

Request for extension of current approval

☐ Identify date of original DRC approval: _____ Current expiration date: _____ Org. App. No. _____

☐ Describe why this extension is necessary and whether any significant changes have occurred either on the site or in the neighborhood.

SEQR Environmental Assessment Form

☐ Applicants proposing the following must complete "Part I" of the SEQR Short Environmental Assessment Form (available here: http://www.dec.ny.gov/docs/permits_ej_operations_pdf/seafpartone.pdf):

- Construction or expansion of a multi-family residential structure (4 units +)
- Construction or expansion (exceeding 4,000 sq. ft. gross floor area) of a principal or accessory non-residential structure
- Telecommunications facility, radio antennae, satellite dishes
- Demolition

Disclosure

Does any City officer, employee or family member thereof have a financial interest (as defined by General Municipal Law Section 809) in this application?

☒ No ☐ Yes - If yes, a statement disclosing the name, residence, nature, and extent of this interest must be filed with this application.

Certification

I/we, the property owner(s), or purchaser(s)/lessee(s) under contract, of the land in question, hereby request an appearance before the Design Review Commission.

By the signature(s) attached hereto, I/we certify that the information provided within this application and accompanying documentation is, to the best of my/our knowledge, true and accurate. I/we further understand that intentionally providing false or misleading information is grounds for immediate denial of this application.

I/we hereby authorize the members of the Design Review Commission and designated City staff to enter the property associated with this application for purposes of conducting any necessary site inspections relating to this application.

Furthermore, I/we agree to meet all requirements under Article VII for Historic Review or Article VIII for Architectural Review of the Zoning Code of the City of Saratoga Springs.

Brenda Carpenter _____ Date: 9/12/16
(applicant signature)

_____ Date: _____
(applicant signature)

If applicant is not the currently the owner of the property, the current owner must also sign.

Owner Signature: Brenda Carpenter Date: 9/12/16

Owner Signature: _____ Date: _____

Revised 06/03/16

This proof is not submitted for color approval or print quality. Please proof read carefully upon receipt. Colors viewed on monitors may vary slightly from actual colors in final production. If color critical, please provide accurate color samples (ie: pantone, paint swatches, etc.) Signed proofs indicate review and acceptance of the proof. Once proof is signed and returned with approval, we are not responsible for any discrepancies regarding color, spelling or materials used in production.

PROOFS MUST BE SIGNED AND RETURNED VIA EMAIL OR FAX BEFORE PROCEEDING

ADIRONDACK SIGN COMPANY
72 Ballston Ave.
Saratoga Springs, NY 12866
[redacted]
www.AdkSignCo.com

Customer: Carpe Diem Real Properties, LLC
Project Name: 489 Building Sign
Designer: RD
Date: 8/30/16
Revision Date:

Approved As Is: _____
Signature/Date

Approved with Corrections; no further proof needed: _____

Revisions Required; New proof needed: _____

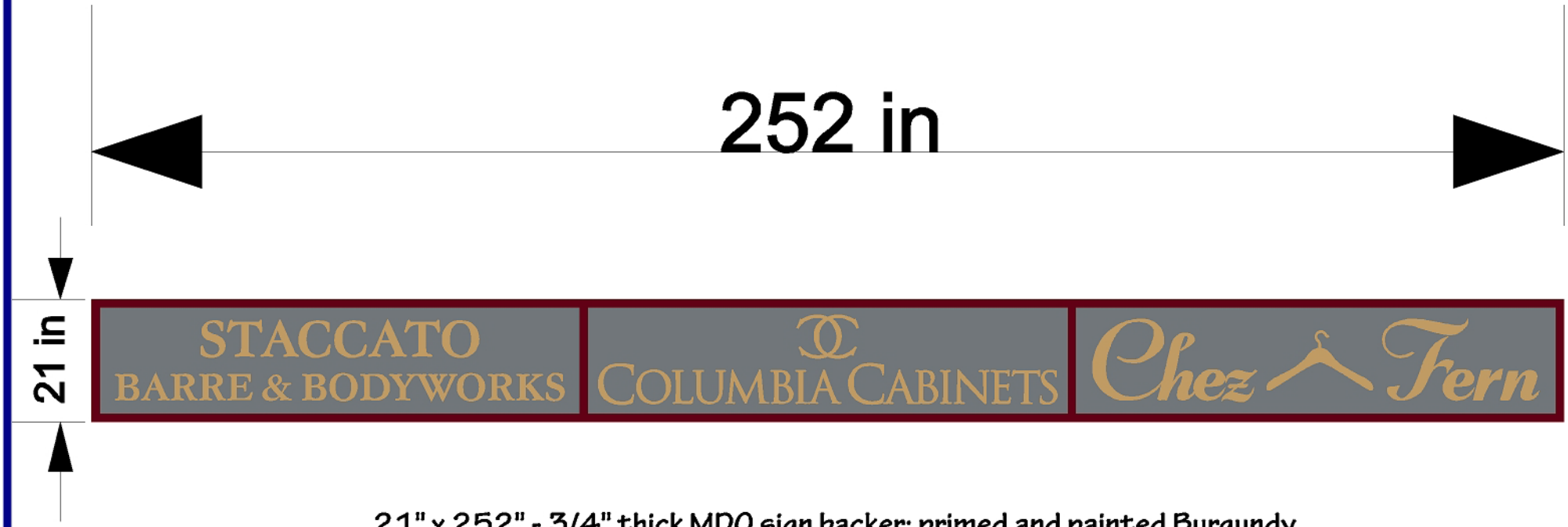

21" x 252" - 3/4" thick MDO sign backer; primed and painted Burgundy
- Q3 @ 18" x 82" Inner Sign Panels - 3mm Silver Dibond
- Prizmatic cut lettering; primed and painted Brilliant Gold

This proof is not submitted for color approval or print quality. Please proof read carefully upon receipt. Colors viewed on monitors may vary slightly from actual colors in final production. If color critical, please provide accurate color samples (ie: pantone, paint swatches, etc.) Signed proofs indicate review and acceptance of the proof. Once proof is signed and returned with approval, we are not responsible for any discrepancies regarding color, spelling or materials used in production.

PROOFS MUST BE SIGNED AND RETURNED VIA EMAIL OR FAX BEFORE PROCEEDING

ADIRONDACK SIGN COMPANY
72 Ballston Ave., Saratoga Springs, NY 12866
[redacted]
www.AdkSignCo.com

Customer: Carpe Diem Real Properties, LLC
Project Name: 489 Building Sign
Designer: RD
Date: 8/30/16
Revision Date:

Approved As Is: _____
Signature/Date

Approved with Corrections;
no further proof needed: _____

Revisions Required; New proof needed: _____

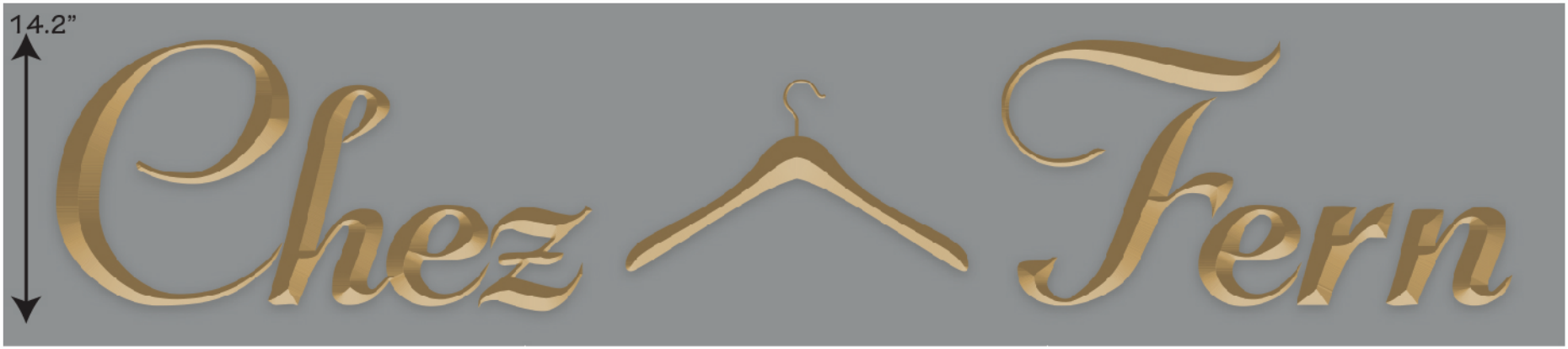

- 18" x 82" Inner Sign Panel - 3mm Silver Dibond
- Prizmatic cut lettering; primed and painted Brilliant Gold

This proof is not submitted for color approval or print quality. Please proof read carefully upon receipt. Colors viewed on monitors may vary slightly from actual colors in final production. If color critical, please provide accurate color samples (ie: pantone, paint swatches, etc.) Signed proofs indicate review and acceptance of the proof. Once proof is signed and returned with approval, we are not responsible for any discrepancies regarding color, spelling or materials used in production.

PROOFS MUST BE SIGNED AND RETURNED VIA EMAIL OR FAX BEFORE PROCEEDING

ADIRONDACK SIGN COMPANY
72 Ballston Ave., Saratoga Springs, NY 12866
[redacted]
www.AdkSignCo.com

Customer: Carpe Diem Real Properties, LLC
Project Name: Building Signage
Designer: RD
Date: 8/30/16
Rev Date:

Approved As Is: _____
Signature/Date

Approved with Corrections;
no further proof needed: _____

Revisions Required; New proof needed: _____

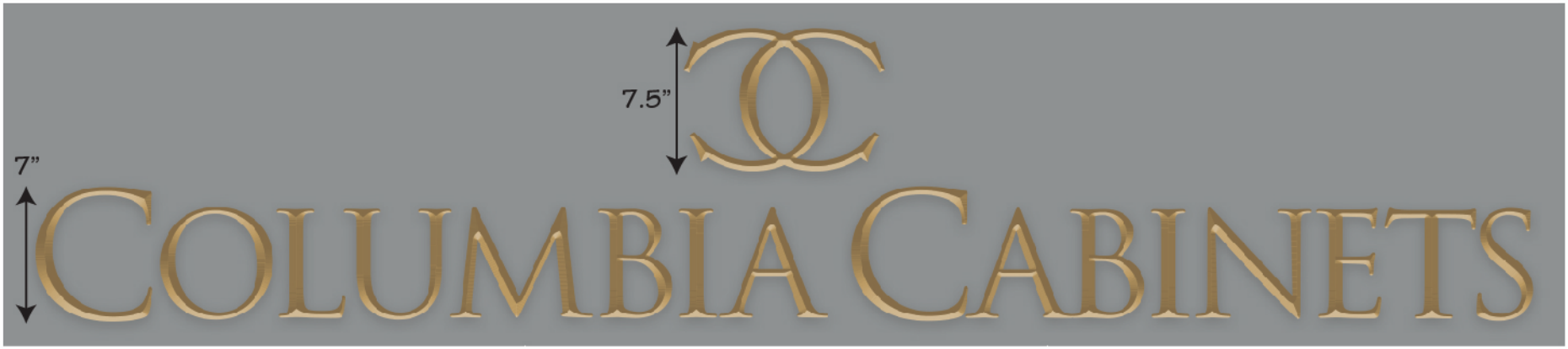

- 18” x 82” Inner Sign Panel - 3mm Silver Dibond
- Prizmatic cut lettering; primed and painted Brilliant Gold

This proof is not submitted for color approval or print quality. Please proof read carefully upon receipt. Colors viewed on monitors may vary slightly from actual colors in final production. If color critical, please provide accurate color samples (ie: pantone, paint swatches, etc.) Signed proofs indicate review and acceptance of the proof. Once proof is signed and returned with approval, we are not responsible for any discrepancies regarding color, spelling or materials used in production.

PROOFS MUST BE SIGNED AND RETURNED VIA EMAIL OR FAX BEFORE PROCEEDING

ADIRONDACK SIGN COMPANY
72 Ballston Ave., Saratoga Springs, NY 12866
[redacted]
www.AdkSignCo.com

Customer: Carpe Diem Real Properties, LLC
Project Name: Building Signage
Designer: RD
Date: 8/30/16
Rev Date:

Approved As Is: _____
Signature/Date

Approved with Corrections;
no further proof needed: _____

Revisions Required; New proof needed: _____

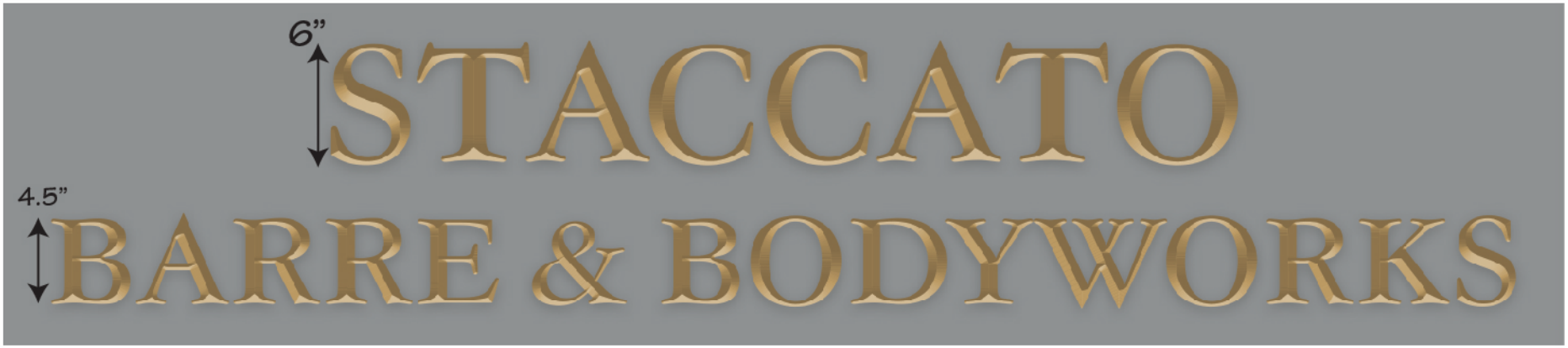

- 18” x 82” Inner Sign Panel - 3mm Silver Dibond
- Prizmatic cut lettering; primed and painted Brilliant Gold

This proof is not submitted for color approval or print quality. Please proof read carefully upon receipt. Colors viewed on monitors may vary slightly from actual colors in final production. If color critical, please provide accurate color samples (ie: pantone, paint swatches, etc.) Signed proofs indicate review and acceptance of the proof. Once proof is signed and returned with approval, we are not responsible for any discrepancies regarding color, spelling or materials used in production.

PROOFS MUST BE SIGNED AND RETURNED VIA EMAIL OR FAX BEFORE PROCEEDING

ADIRONDACK SIGN COMPANY
72 Ballston Ave., Saratoga Springs, NY 12866
[redacted]
www.AdkSignCo.com

Customer: Carpe Diem Real Properties, LLC
Project Name: Building Signage
Designer: RD
Date: 8/30/16
Rev Date:

Approved As Is: _____
Signature/Date

Approved with Corrections;
no further proof needed: _____

Revisions Required; New proof needed: _____

CITY OF SARATOGA SPRINGS

DESIGN REVIEW COMMISSION

City Hall - 474 Broadway
Saratoga Springs, New York 12866
Tel: 518-587-3550 x.515 fax: 518-580-9480
www.saratoga-springs.org

[FOR OFFICE USE]

_____ (Application #)

_____ (Date received)

ARCHITECTURAL / HISTORIC REVIEW APPLICATION

	APPLICANT(S)*	OWNER(S) *(If not applicant)*	ATTORNEY/AGENT
Name	Michael Criscione Agency	Gibraltar Management	Action Sign Company, LLC
Address	133 Ballston Ave.	150 White Plains Rd./Suite 400	3276 River Rd.
	Saratoga Springs, NY 12866	Tarrytown, NY 10951	Rensselaer, NY 12144-5121
Phone	[redacted] /	[redacted]	[redacted]
Email		[redacted]	[redacted]

Identify primary contact person: ☐ Applicant ☐ Owner ■ Attorney/Agent

* An applicant must be the property owner, lessee, or one with an option to lease or purchase the property in question.
PLEASE REFER TO OWNER AUTHORIZATION LETTER

Applicant's interest in premises: ☐ Owner ☐ Lessee ☐ Under option to lease or purchase

PROPERTY INFORMATION

Property Address/Location: 133 Ballston Ave. Tax Parcel #: _____ . _____ - _____ - _____
(for example: 165.52 – 4 – 37)

Current Zoning District: UR-2 Property use: ☐ Residential ■ Non-residential/mixed-use

Type of Review: ■ Architectural ☐ Historic ☐ Extension/modification (of current approval)

Summary description of proposed action:
Remove existing Building Signage & Replace with new National Rebranding Sign. (1) Good Hands logo with Allstate Channel letters, per attached Scope of Work.

Has a previous application been filed with the DRC for this property? ■ No ☐ Yes – date(s)? _____

- App. No.(s)? _____

Revised 06/03/16

APPLICATION FEE (payable to "Commissioner of Finance"):

Residential Structures (principal, accessory)	$25	Non-residential / mixed-use structures (principal)	$300
Residential approval – extension	$25	Non-residential signs, awnings, accessory structures	$100
Residential - administrative action	$25	Non-residential approval – extension	$100
		Non-residential - administrative action	$100

A "complete" application consists of **1 original, 9 hard copies, and 1 electronic copy of application & ALL other materials as required below:

New Construction / Additions

- ☐ Color photographs showing site/exterior details of existing structures and adjacent properties
- ☐ Site plan, drawn to scale, showing existing & proposed construction, property lines & dimensions, required & proposed setbacks & lot coverage, site features (fences, walks, trees, etc.); on no larger than 2'x3' sheet – smaller preferred if legible
- ☐ Elevation drawings showing design of all sides of existing & proposed construction – label dimensions, colors, materials, lighting (fixture & lamp type, wattage), etc. - include compass bearing & scale; no larger than 2'x3' sheet – smaller permitted if legible
- ☐ Floor plans for proposed structure; on sheet no larger than 2'x3' – smaller permitted if legible
- ☐ Product literature, specifications and samples of proposed materials and colors

Change in exterior building materials (windows, doors, roof, siding, etc.), or color (in non-residential districts only)

- ☐ Color photographs showing site/exterior details of existing structures and that illustrate affected features
- ☐ Elevation drawings showing all sides of existing & proposed construction – label dimensions, colors, materials, lighting (fixture & lamp type, wattage), etc. - include compass bearing & scale; no larger than 2'x3' sheet – smaller permitted if legible
- ☐ Product literature, specifications and samples of proposed materials and colors

Within front yard setbacks in Historic Districts only (Front setbacks: UR-1 & INST-HTR=30'; UR-4=25'; UR-2, UR-3 & NCUD-1=10')

- Installation, removal or change in material of drive- and walkways
- Installation or removal of architectural, sculptural or vegetative screening over 3' in height
- Installation of accessory utility structures or radio/satellite transmission/reception devices (more than 2' diameter)

For any of above:

- ☐ Color photographs showing site/exterior details of existing structures, and of adjacent properties
- ☐ Site plan showing existing & proposed construction: include property lines & dimensions, required & proposed setbacks & lot coverage, site features (fences, walks, trees, etc.) street names, compass bearing & scale; no larger than 2'x3' sheet – smaller preferred if legible
- ☐ Product literature, specifications and samples of proposed materials and colors

Signage / Awnings

- ■ Color photographs showing site/exterior details of existing structures, and adjacent properties
- ■ Plan showing location of proposed sign/awning structure on building/premises: no larger than 11"x17"
- ■ Scaled illustration of proposed sign/awning structure and lettering (front view & profile): include all dimensions of structure; type, dimensions and style of lettering or logo; description of colors, materials, mounting method and hardware
- ■ Descriptions, specifications of proposed lighting including fixture & lamp type, wattage, mounting method, and location
- ■ Product literature, specifications and samples of proposed materials and colors

Demolition

- ☐ Color photographs showing site/exterior details of existing structures, and of adjacent properties
- ☐ Site plan showing existing and any proposed structures - include dimensions, setbacks, street names, compass bearing, and scale
- ☐ Written description of reasons for demolition and, in addition:
  - ☐ For structures of "architectural/historical significance", demonstrate "good cause" why structure cannot be preserved
  - ☐ For structures in an architectural district that might be eligible for listing on National Register of Historic Places, or for a "contributing" structure in a National Register district (contact City staff), provide plans for site development following demolition - include a timetable and letter of credit for project completion

Telecommunication facilities

- ☐ Color photographs showing site/existing structures, and of adjacent properties
- ☐ Site plan showing existing and proposed structures: include dimensions, setbacks, street names, compass bearing, and scale
- ☐ Scaled illustration of proposed structures: include all dimensions; colors, materials, lighting, mounting details
- ☐ Consult Article 240-12.22 of the City's Zoning Ordinance and City staff to ensure compliance with requirements for visual impact assessment and existing and proposed vegetative screening

Request for extension of current approval

☐ Identify date of original DRC approval: _____ Current expiration date: _____ Org. App. No. _____

☐ Describe why this extension is necessary and whether any significant changes have occurred either on the site or in the neighborhood.

SEQR Environmental Assessment Form

☐ Applicants proposing the following must complete "Part I" of the SEQR Short Environmental Assessment Form (available here: http://www.dec.ny.gov/docs/permits_ej_operations_pdf/seafpartone.pdf):

- Construction or expansion of a multi-family residential structure (4 units +)
- Construction or expansion (exceeding 4,000 sq. ft. gross floor area) of a principal or accessory non-residential structure
- Telecommunications facility, radio antennae, satellite dishes
- Demolition

Disclosure

Does any City officer, employee or family member thereof have a financial interest (as defined by General Municipal Law Section 809) in this application?

■ No ☐ Yes - If yes, a statement disclosing the name, residence, nature, and extent of this interest must be filed with this application.

Certification

I/we, the property owner(s), or purchaser(s)/lessee(s) under contract, of the land in question, hereby request an appearance before the Design Review Commission.

By the signature(s) attached hereto, I/we certify that the information provided within this application and accompanying documentation is, to the best of my/our knowledge, true and accurate. I/we further understand that intentionally providing false or misleading information is grounds for immediate denial of this application.

I/we hereby authorize the members of the Design Review Commission and designated City staff to enter the property associated with this application for purposes of conducting any necessary site inspections relating to this application.

Furthermore, I/we agree to meet all requirements under Article VII for Historic Review or Article VIII for Architectural Review of the Zoning Code of the City of Saratoga Springs.

_____ Date: 8-23-2016
(applicant signature)

_____ Date: _____
(applicant signature)

If applicant is not the currently the owner of the property, the current owner must also sign.

PLEASE REFER TO OWNER AUTHORIZATION LETTER

Owner Signature: _____ Date: _____

Owner Signature: _____ Date: _____

FOR OFFICE USE ONLY

This application has been reviewed by the Zoning Enforcement Officer and is being forwarded to the Commission.

Signature: _____ Date: _____

Additional Comments: _____

_____

_____

_____

_____

_____

_____

_____

_____

PHILADELPHIASIGN
BRINGING THE WORLD'S BRANDS TO LIFE

Philadelphia Sign Company • 707 West Spring Garden St • Palmyra, NJ 08065

Re: SiteID NYETL
Criscione Agency
133 Ballston Ave
Saratoga Springs, NY 12866

AUTHORIZATION AND CONSENT FORM

By my signature below, I hereby represent that I am the owner of the property indicated above or otherwise duly authorized by the Lease to grant authorization for Philadelphia Sign Company and/or their sub contractor to apply for permits and install new signage at the above referenced location as per the attached brand book.

LANDLORD APPROVAL

Signature _____ *Print Name* Loomis J. Grossman *Date* 7/28/16

Title owner *email* [redacted]

Address 150 White Plains Road *Phone* [redacted]
Tarrytown, NY 10591

Return Form to: **Philadelphia Sign Company**
707 West Spring Garden St
Palmyra, NJ 08065

email (Preferred): [redacted]

or FAX to: [redacted]

Action Sign Company, LLC ASC Powder Coating, a division of
3276 River Rd., Rensselaer, NY 12144-5121
[redacted]

August 4, 2016

City of Saratoga Springs
Design Review Commission
City Hall
474 Broadway
Saratoga Springs, NY 12866

Re: Narrative
Allstate-Criscione Agency, Michael J Criscione, 133 Ballston Ave., Saratoga Springs, NY 12866
Building Signage National Rebranding

Dear Design Review Commission;

We have been hired by Philadelphia Sign of Palmyra, NJ, to permit signage for the above Allstate location.

Scope of work will be to remove the outdated Allstate Building Sign-Logo & Channel letters, and install the current National Rebranding Sign Identification.

Allstate colors of blue and white remain the same.

Our Client is requesting a minimal change in size, as well.
The "Good Hands" Logo and the "Allstate" Channel letters are minimally larger.
The "Good Hands" Logo background switches from the white to the blue, with the outline portion switching from the blue to the white, as you will see on the renderings.

The Street View in the attached packet- the existing Sign and Logo get washed out at a distance.
Therefore, it is our professional opinion that a minimally larger sign, would be in the client and their client's best interest, and yet remain aesthetically pleasing to the surrounding area.

Code will allow 40 Sq. Ft. for Building sign, based on length of building (20') x 2 = 40 sq. ft.
Client is requesting a 3 unit sign, which is 33.76 sq. ft.
Code allows 18" high letters/logo
Client is requesting a 24" logo, and 41" high letters

Attached, please find the following for your review:

Design Review Commission Application for the City of Saratoga Springs
Authorization and Consent form from Gibraltar Management as Owner's Agent
Arial Site Plan showing location of Sign and Business location.
Color Elevation Rendering, showing existing sign, and proposed sign, with measurements.
Sign Manufacturing and installation details, including illumination.
Color rendering from Street View, circa 2015

Thank you for your time to review our application.

Best Regards,

Wendy Schouten-Eades,
Project Coordinator

SIGN#	PAGE#	SIGNTYPE	ACTION
~~E01~~	~~P01~~	~~ALST.DOOR.STD.VIN~~	~~Remove & Replace Sign~~
E02	P02	ALST.CL.RW.B_24	Remove & Replace Sign
~~E03~~	~~P02~~	~~No Action~~	~~No Action~~
~~N01~~	~~P02~~	~~ALST.WVT_C~~	~~New Sign~~

Michael J Criscione **Agent #:0A0000**

Allstate

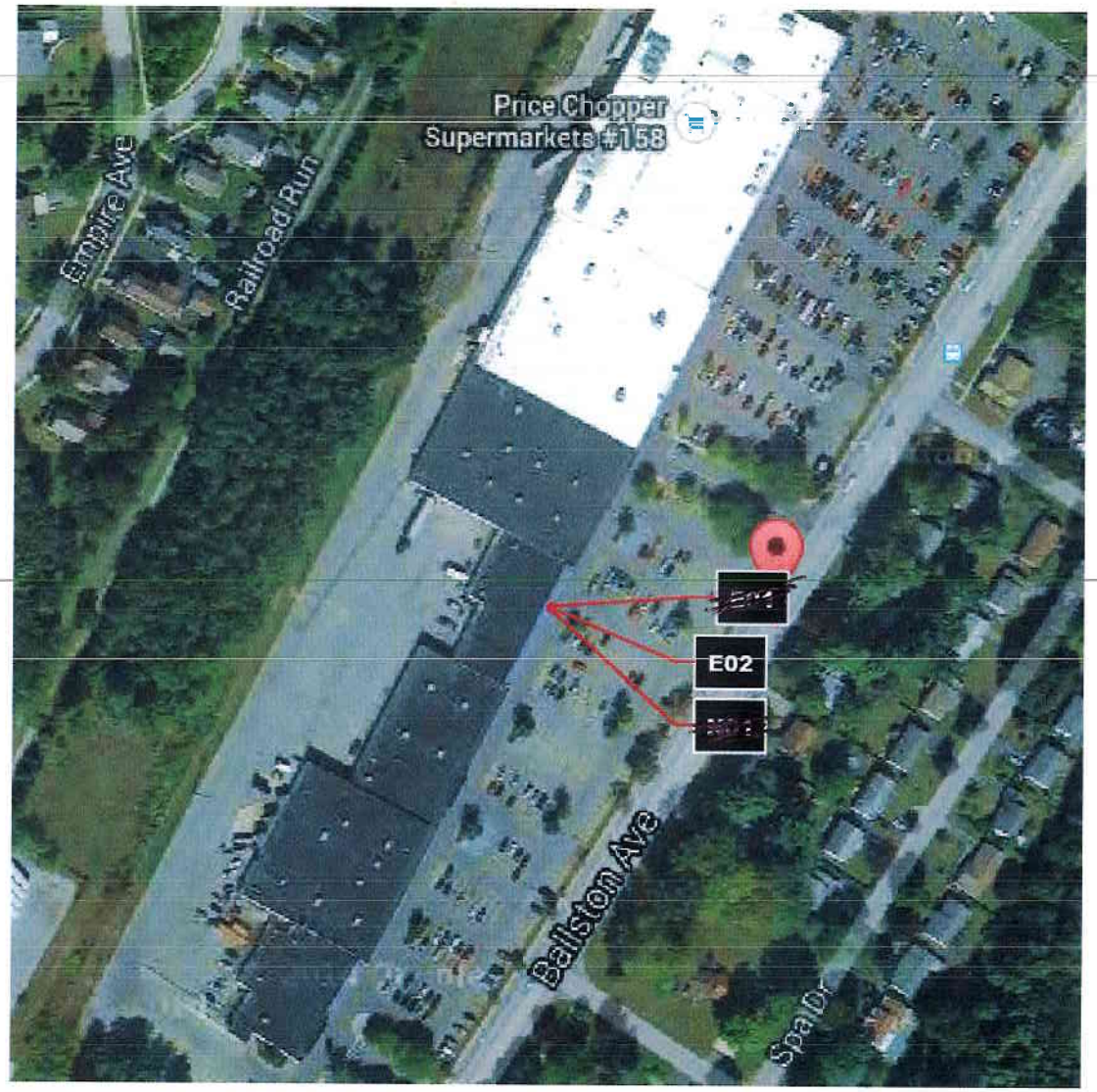

PHILADELPHIASIGN
BRINGING THE WORLD'S BRANDS TO LIFE

707 West Spring Garden Street
Palmyra, NJ 08065-1798

DRAWING NUMBER: **A22903**

LOCATION: **NYETL** **- NY**

Criscione Agency
133 Ballston Ave
Saratoga Springs, NY

THIS IS AN ORIGINAL UNPUBLISHED DRAWING CREATED BY PHILADELPHIA SIGN IT IS SUBMITTED FOR YOUR PERSONAL USE IN CONJUNCTION WITH A PROJECT BEING PLANNED FOR YOU BY PHILADELPHIA SIGN IT IS NOT TO BE SHOWN TO ANYONE OUTSIDE YOUR

SIGN#	SIGN TYPE	SIGN DESCRIPTION	ACTION
E02	*ALST.CL.RW.B_24*	24"h Illuminated Blue Day/White Night Raceway Channel Letters 3' 5-3/8"oah x 14' 1-5/8"oal (49 SF)	Remove & Replace Sign
E03	*No Action*	No Action - A Frame Sign - Not in Scope of Work	No Action
N01	*ALST.WVT_C*	1st Surface Window Vinyl Treatment "C" Swoosh Version	New Sign

PROPOSED SIGNAGE PHOTO

EXISTING SIGNAGE PHOTO

Existing Sign Dimensions:
23-1/2"h x 13' 0"w

**NOTE:*
Your approval of the Brandbook indicates your acceptance that the signage, provided to you and owned by Allstate, will be manufactured and installed as shown, pending landlord and/or municipality approval. Once accepted, signage may not be declined at time of installation for any reason other than a manufacturing defect. Any Allstate-branded items that we install are the property of Allstate .

PHILADELPHIASIGN
BRINGING THE WORLD'S BRANDS TO LIFE
707 West Spring Garden Street
Palmyra, NJ 08065-1798

CLIENT: ALLSTATE - NY

LOCATION: **NYETL**
Criscione Agency
133 Ballston Ave
Saratoga Springs, NY

DATE: 3/27/2015

SHEET: P02

DWG BY: TP

REVISION:
5.20.16 RJW Rev E02, Add N01

DRAWING NUMBER: A22903

THIS IS AN ORIGINAL UNPUBLISHED DRAWING CREATED BY PHILADELPHIA SIGN IT IS SUBMITTED FOR YOUR PERSONAL USE IN CONJUNCTION WITH A PROJECT BEING PLANNED FOR YOU BY PHILADELPHIA SIGN IT IS NOT TO BE SHOWN TO ANYONE OUTSIDE YOUR

ENGINEERING
SHOP
VINYL / LAYOUT
ROUTING / KNIFE

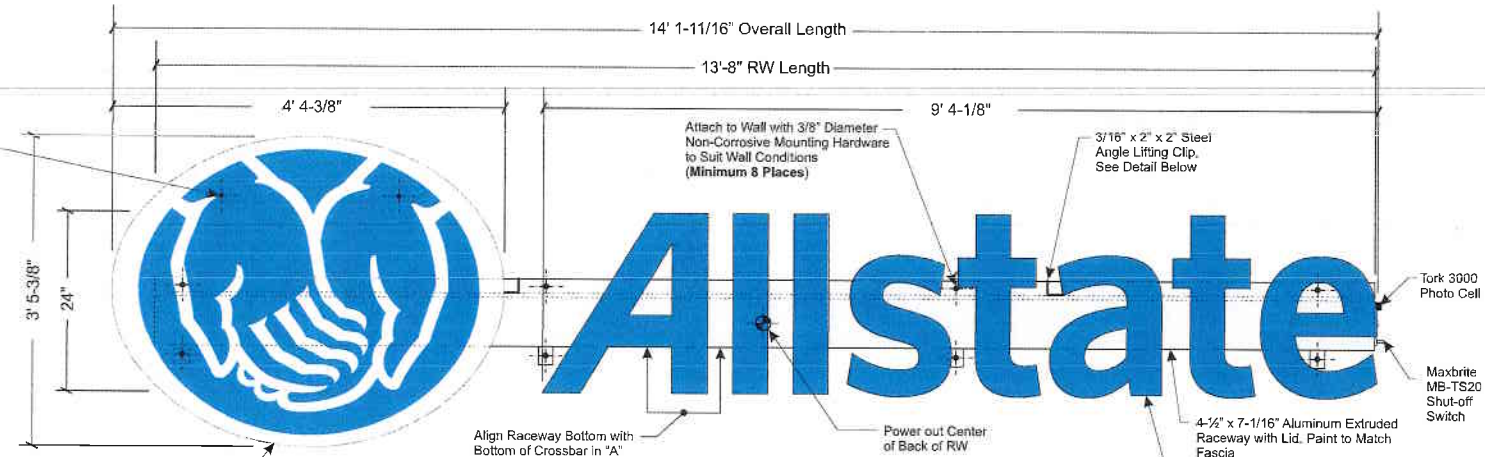

ALST.CL.RW.B.EL_24
FRONT ELEVATION
Scale: 3/4" = 1'-0"

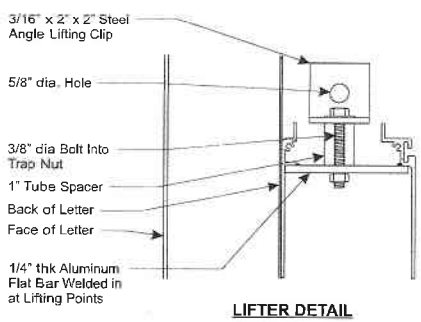

LIFTER DETAIL
Scale: 3" = 1'-0"

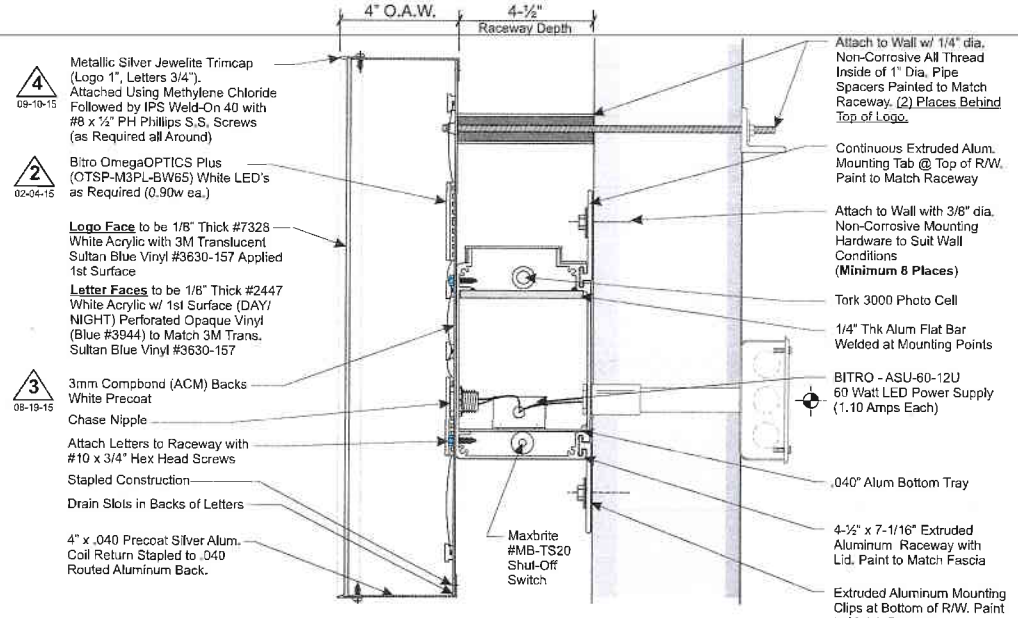

SECTION
Scale: 3" = 1'-0"

ELECTRICAL LOAD
(1.16) Amps @ 120 Volts
ELECTRICAL REQ'MTS
(1) 20 Amp/120 Volt Circuits
2 02-04-15

LED Specifications:
1. (2) BITRO - ASU-60-12U 60 Watt LED Power Supply
2. (90 Each) Bitro OmegaOPTICS Plus (OTSP-M3PL-BW65) White LEDs

STANDARD LETTER NOTES:
1. Sufficient Primary Circuit In Vicinity Of Sign By Others.
2. Letter To Letter Wiring & Final Primary Hook-up By Sign Installer, Where Allowed By Local Codes.
3. Sign Shall Be U.L. Listed.
4. Mounting Hardware By Sign Installer.
5. Full Size Drilling Template Furnished With Sign.

Note: This sign is intended to be installed in accordance with the requirements of Article 600 of the National Electrical Code and/or other applicable local codes. This includes proper grounding and bonding of the sign.

PERMIT DRAWING

PHILADELPHIASIGN
BRINGING THE WORLD'S BRANDS TO LIFE
707 West Spring Garden Street
Palmyra, New Jersey 08065
Phone: 856.829.1460
Fax: 856.829.8549
www.philadelphiasign.com

CUSTOMER: ALLSTATE
JOB NUMBER:
SIGN TYPE: ALST.CL.RW.B.EL_24
LOCATION:
DATE: 9/30/2014
DRAWN BY: GJF
REVISION:

Number:	Date:	By:
4	9/10/2015	GJF

SHEET: 1 of 1 ENG DEPT
DWG NUMBER: B57463
ENGINEER SEAL:

MAX DESIGN WIND SPEED 90 MPH
EXPOSURE C

THIS IS AN ORIGINAL UNPUBLISHED DRAWING CREATED BY PSCO. IT IS SUBMITTED FOR YOUR PERSONAL USE IN CONJUNCTION WITH A PROJECT BEING PLANNED FOR YOU BY PSCO. IT IS NOT TO BE SHOWN TO ANYONE OUTSIDE YOUR ORGANIZATION NOR IS IT TO BE USED, COPIED, REPRODUCED, OR EXHIBITED IN ANY FASHION.

133 Ballston Spa Road, Saratoga Springs, NY

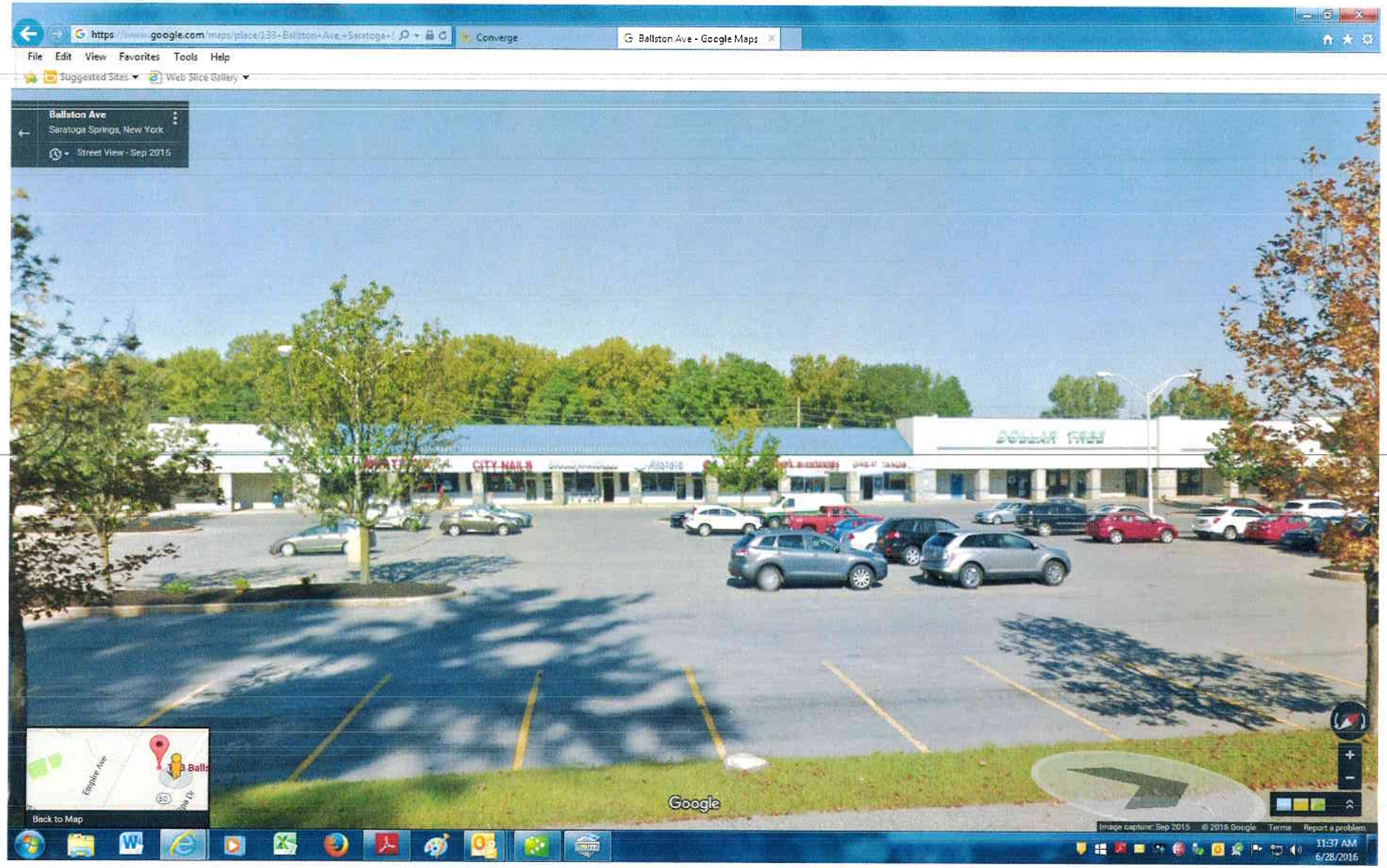

PHILADELPHIASIGN

BRINGING THE WORLD'S BRANDS TO LIFE

Philadelphia Sign Company • 707 West Spring Garden St • Palmyra, NJ 08065

Re: SiteID NYETL
Criscione Agency
133 Ballston Ave
Saratoga Springs, NY 12866

AUTHORIZATION AND CONSENT FORM

By my signature below, I hereby represent that I am the owner of the property indicated above or otherwise duly authorized by the Lease to grant authorization for Philadelphia Sign Company and/or their sub contractor to apply for permits and install new signage at the above referenced location as per the attached brand book.

LANDLORD APPROVAL owners representative

Signature [illegible] *Print Name* Scott Zelekauitz *Date* 6/23/16

Title V.P. *email* [redacted]

Address 150 White Plains Rd *Phone* [redacted]

Tarrytown, NY 10591

Return Form to: **Philadelphia Sign Company**
707 West Spring Garden St
Palmyra, NJ 08065

email (Preferred): [redacted]

or FAX to: [redacted]

CITY OF SARATOGA SPRINGS

DESIGN REVIEW COMMISSION

City Hall - 474 Broadway
Saratoga Springs, New York 12866
Tel: 518-587-3550 x.515 fax: 518-580-9480
www.saratoga-springs.org

[FOR OFFICE USE]

_____ (Application #)

_____ (Date received)

ARCHITECTURAL / HISTORIC REVIEW APPLICATION

	APPLICANT(S)*	OWNER(S) *(If not applicant)*	ATTORNEY/AGENT
Name	Presbyterian New England Congregatio		
Address	24 Circular Street		
	Saratoga Springs, NY 12866		
Phone	[redacted]	/	/
Email	[redacted]		

Identify primary contact person: ■ Applicant ☐ Owner ☐ Attorney/Agent

* An applicant must be the property owner, lessee, or one with an option to lease or purchase the property in question.

Applicant's interest in premises: ■ Owner ☐ Lessee ☐ Under option to lease or purchase

PROPERTY INFORMATION

Property Address/Location: 24 Circular Street Tax Parcel #: 165 . 84 - 1 - 76
(*for example: 165.52 – 4 – 37*)

Current Zoning District: UR-2 Property use: ☐ Residential ■ Non-residential/mixed-use

Type of Review: ☐ Architectural ■ Historic ☐ Extension/modification (of current approval)

Summary description of proposed action:
High Peaks Solar will install ninety-nine [99] solar modules on two roof surfaces that face southwest.

Has a previous application been filed with the DRC for this property? ■ No ☐ Yes – date(s)? _____

- App. No.(s)? _____

APPLICATION FEE (payable to "Commissioner of Finance"):

Residential Structures (principal, accessory)	$25	Non-residential / mixed-use structures (principal)	$300
Residential approval – extension	$25	Non-residential signs, awnings, accessory structures	$100
Residential - administrative action	$25	Non-residential approval – extension	$100
		Non-residential - administrative action	$100

A "complete" application consists of **1 original, 9 hard copies, and 1 electronic copy of application & ALL other materials as required below:

New Construction / Additions

- ☐ Color photographs showing site/exterior details of existing structures and adjacent properties
- ☐ Site plan, drawn to scale, showing existing & proposed construction, property lines & dimensions, required & proposed setbacks & lot coverage, site features (fences, walks, trees, etc.); on no larger than 2'x3' sheet – smaller preferred if legible
- ☐ Elevation drawings showing design of all sides of existing & proposed construction – label dimensions, colors, materials, lighting (fixture & lamp type, wattage), etc. - include compass bearing & scale; no larger than 2'x3' sheet – smaller permitted if legible
- ☐ Floor plans for proposed structure; on sheet no larger than 2'x3' – smaller permitted if legible
- ☐ Product literature, specifications and samples of proposed materials and colors

Change in exterior building materials (windows, doors, roof, siding, etc.), or color (in non-residential districts only)

- ■ Color photographs showing site/exterior details of existing structures and that illustrate affected features
- ☐ Elevation drawings showing all sides of existing & proposed construction – label dimensions, colors, materials, lighting (fixture & lamp type, wattage), etc. - include compass bearing & scale; no larger than 2'x3' sheet – smaller permitted if legible
- ■ Product literature, specifications and samples of proposed materials and colors

Within front yard setbacks in Historic Districts only (Front setbacks: UR-1 & INST-HTR=30'; UR-4=25'; UR-2, UR-3 & NCUD-1=10')

- Installation, removal or change in material of drive- and walkways
- Installation or removal of architectural, sculptural or vegetative screening over 3' in height
- Installation of accessory utility structures or radio/satellite transmission/reception devices (more than 2' diameter)

For any of above:

- ☐ Color photographs showing site/exterior details of existing structures, and of adjacent properties
- ☐ Site plan showing existing & proposed construction: include property lines & dimensions, required & proposed setbacks & lot coverage, site features (fences, walks, trees, etc.) street names, compass bearing & scale; no larger than 2'x3' sheet – smaller preferred if legible
- ☐ Product literature, specifications and samples of proposed materials and colors

Signage / Awnings

- ☐ Color photographs showing site/exterior details of existing structures, and adjacent properties
- ☐ Plan showing location of proposed sign/awning structure on building/premises: no larger than 11"x17"
- ☐ Scaled illustration of proposed sign/awning structure and lettering (front view & profile): include all dimensions of structure; type, dimensions and style of lettering or logo; description of colors, materials, mounting method and hardware
- ☐ Descriptions, specifications of proposed lighting including fixture & lamp type, wattage, mounting method, and location
- ☐ Product literature, specifications and samples of proposed materials and colors

Demolition

- ☐ Color photographs showing site/exterior details of existing structures, and of adjacent properties
- ☐ Site plan showing existing and any proposed structures - include dimensions, setbacks, street names, compass bearing, and scale
- ☐ Written description of reasons for demolition and, in addition:
  - ☐ For structures of "architectural/historical significance", demonstrate "good cause" why structure cannot be preserved
  - ☐ For structures in an architectural district that might be eligible for listing on National Register of Historic Places, or for a "contributing" structure in a National Register district (contact City staff), provide plans for site development following demolition - include a timetable and letter of credit for project completion

Telecommunication facilities

- ☐ Color photographs showing site/existing structures, and of adjacent properties
- ☐ Site plan showing existing and proposed structures: include dimensions, setbacks, street names, compass bearing, and scale
- ☐ Scaled illustration of proposed structures: include all dimensions; colors, materials, lighting, mounting details
- ☐ Consult Article 240-12.22 of the City's Zoning Ordinance and City staff to ensure compliance with requirements for visual impact assessment and existing and proposed vegetative screening

Request for extension of current approval

☐ Identify date of original DRC approval: _____Current expiration date: _____ Org. App. No. _____

☐ Describe why this extension is necessary and whether any significant changes have occurred either on the site or in the neighborhood.

SEQR Environmental Assessment Form

☐ Applicants proposing the following must complete "Part I" of the SEQR Short Environmental Assessment Form (available here: http://www.dec.ny.gov/docs/permits_ej_operations_pdf/seafpartone.pdf):

- Construction or expansion of a multi-family residential structure (4 units +)
- Construction or expansion (exceeding 4,000 sq. ft. gross floor area) of a principal or accessory non-residential structure
- Telecommunications facility, radio antennae, satellite dishes
- Demolition

Disclosure

Does any City officer, employee or family member thereof have a financial interest (as defined by General Municipal Law Section 809) in this application?

■ No ☐ Yes - If yes, a statement disclosing the name, residence, nature, and extent of this interest must be filed with this application.

Certification

I/we, the property owner(s), or purchaser(s)/lessee(s) under contract, of the land in question, hereby request an appearance before the Design Review Commission.

By the signature(s) attached hereto, I/we certify that the information provided within this application and accompanying documentation is, to the best of my/our knowledge, true and accurate. I/we further understand that intentionally providing false or misleading information is grounds for immediate denial of this application.

I/we hereby authorize the members of the Design Review Commission and designated City staff to enter the property associated with this application for purposes of conducting any necessary site inspections relating to this application.

Furthermore, I/we agree to meet all requirements under Article VII for Historic Review or Article VIII for Architectural Review of the Zoning Code of the City of Saratoga Springs.

_____ Date: August 22, 2016

(applicant signature)

_____ Date: _____

(applicant signature)

If applicant is not the currently the owner of the property, the current owner must also sign.

Owner Signature: _____ Date: _____

Owner Signature: _____ Date: _____

FOR OFFICE USE ONLY

This application has been reviewed by the Zoning Enforcement Officer and is being forwarded to the Commission.

Signature: _____ Date: _____

Additional Comments: _____

_____

_____

_____

_____

_____

_____

_____

_____

Request for extension of current approval

☐ Identify date of original DRC approval: _____ Current expiration date: _____ Org. App. No. _____

☐ Describe why this extension is necessary and whether any significant changes have occurred either on the site or in the neighborhood.

SEQR Environmental Assessment Form

☐ Applicants proposing the following must complete "Part I" of the SEQR Short Environmental Assessment Form (available here: http://www.dec.ny.gov/docs/permits_ej_operations_pdf/seafpartone.pdf):

- Construction or expansion of a multi-family residential structure (4 units +)
- Construction or expansion (exceeding 4,000 sq. ft. gross floor area) of a principal or accessory non-residential structure
- Telecommunications facility, radio antennae, satellite dishes
- Demolition

Disclosure

Does any City officer, employee or family member thereof have a financial interest (as defined by General Municipal Law Section 809) in this application?

■ No ☐ Yes - If yes, a statement disclosing the name, residence, nature, and extent of this interest must be filed with this application.

Certification

I/we, the property owner(s), or purchaser(s)/lessee(s) under contract, of the land in question, hereby request an appearance before the Design Review Commission.

By the signature(s) attached hereto, I/we certify that the information provided within this application and accompanying documentation is, to the best of my/our knowledge, true and accurate. I/we further understand that intentionally providing false or misleading information is grounds for immediate denial of this application.

I/we hereby authorize the members of the Design Review Commission and designated City staff to enter the property associated with this application for purposes of conducting any necessary site inspections relating to this application.

Furthermore, I/we agree to meet all requirements under Article VII for Historic Review or Article VIII for Architectural Review of the Zoning Code of the City of Saratoga Springs.

_____ Trustee Date: August 22, 2016

(applicant signature)

_____ Date: _____

(applicant signature)

If applicant is not the currently the owner of the property, the current owner must also sign.

Owner Signature: _____ Date: _____

Owner Signature: _____ Date: _____

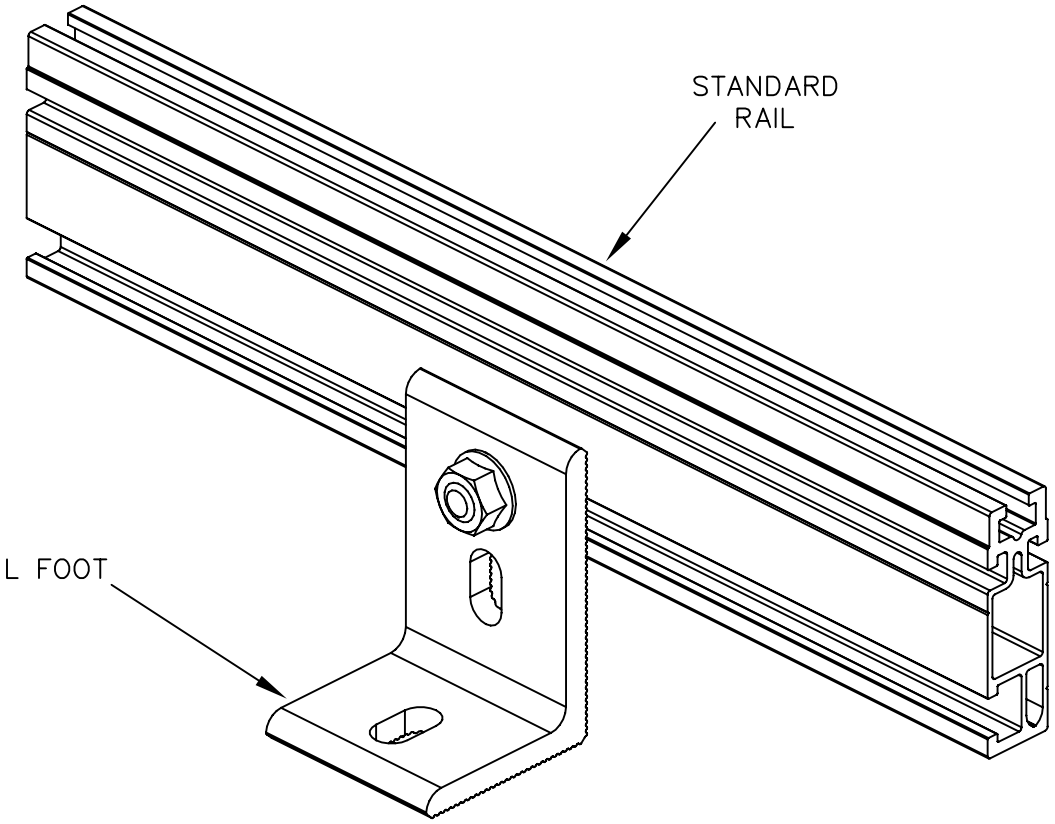

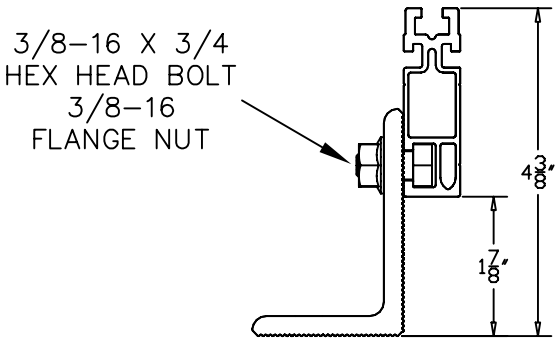

UNIRAC®

© 2008 UNIRAC, INC.

1411 BROADWAY BLVD NE
ALBUQUERQUE, NM 87102 USA
[redacted]
UNIRAC.COM

URASSY–0002

Installation Detail

SolarMount Rail
L-Foot Connection

Value-Added Improvements

- World's first Secure Power Supply now offers up to 2,000 W
- Full grid management capabilities ensures a utility-compliant solution for any market

Reduced Labor

- New Installation Assistant with direct access via smartphone minimizes time in the field
- Integrated disconnect simplifies equipment stocking and speeds installation

Unmatched Flexibility

- SMA's proprietary OptiTrac™ Global Peak technology mitigates shade with ease
- Multiple independent MPPTs accommodate hundreds of stringing possibilities

Trouble-Free Servicing

- Two-part enclosure concept allows for simple, expedited servicing
- Enhanced AFCI technology reduces false tripping while improving sensitivity in real arcs, greatly reducing unneeded service calls

SUNNY BOY 5.0-US/6.0-US

Reduce costs across your entire residential business model

The residential PV market is changing rapidly, and we understand that your bottom line matters more than ever. That's why we've designed a superior residential solution that will help you decrease costs throughout all stages of your business operations. The Sunny Boy 5.0-US/6.0-US join the SMA lineup of field-proven solar technology backed by the world's #1 service team, along with a wealth of improvements. Simple design, improved stocking and ordering, value driven sales support and streamlined installation are just some of the ways that SMA is working to help your business operate more efficiently.

BOTTOM LINE SAVINGS.
FROM THE FACTORY TO THE FIELD.

SMA understands that hard and soft cost reductions must be achieved in order to maintain a competitive presence in the market. That's why we've designed a superior residential solution that will help you decrease costs throughout all stages of your business model.

SIMPLE, FLEXIBLE DESIGN

Speed the completion of customer proposals and maximize the efficiency of your design team with the Sunny Boy 5.0-US/6.0-US, which provides a new level of flexibility in system design by offering:

- Hundreds of stringing configurations
- Multiple independent MPPTs
- SMA's proprietary OptiTrac™ Global Peak shade mitigation technology
- Diverse application options including on- and off-grid compatibility

VALUE DRIVEN SALES ENABLEMENT

SMA wants to enable your sales team by arming them with an abundance of feature/benefit support. Show your customers the value of the Sunny Boy 5.0-US/6.0-US by utilizing:

- Secure Power Supply, now with 2,000 W of opportunity power in the event of a grid outage, as an increased value-add or upsell opportunity
- SMA's 30 year history and status as the #1 global inverter manufacturer instills homeowners with peace of mind and the long-term security they demand from a PV investment
- An economical solution for shade mitigation and the challenges of complex roofs
- Complete grid-management capabilities, ensuring a utility-compliant solution for customers operating in any market

IMPROVED STOCKING AND ORDERING

Ensure that your back office business operations run smoothly and succinctly while mitigating potential errors. The Sunny Boy 5.0-US/6.0-US can help achieve cost savings in these areas by providing:

» An integrated DC disconnect that simplifies equipment stocking and allows for a single inverter part number

» Accurate order processing by eliminating the potential errors associated with incompatible disconnects provided to your installation team

STREAMLINED INSTALLATION AND COMMISSIONING

Expedite your operations in the field by taking advantage of the new Sunny Boy's installer-friendly feature set including:

» Direct access via smartphone and utilization of SMA's Installation Assistant, which minimizes time/labor spent in the field and speeds the path to commissioning

» Improved communication capabilities that remove the need to install additional equipment

» Integrated DC disconnect that simplifies onsite logistics and eliminates the need to install a separate disconnect unit, speeding overall installation time

SUPERIOR SERVICE

SMA understands the factors that contribute to lifetime PV ownership cost, that's why the Sunny Boy 5.0-US/6.0-US was designed for maximum reliability and backstopped by an unmatched service offering. Benefit from:

» Enhanced AFCI technology that improves resistance against false tripping while improving sensitivity in detecting real arcs, which greatly reduces unneeded service calls and increases safety

» The new Sunny Boy's two-part enclosure concept that separates the connection unit from the power unit, which allows for simple, expedited servicing

» The #1 service team in the PV industry, as recognized by IMS research, with experience servicing an installed base of more than 40 GW

SAME NAME, NEW GAME

The Sunny Boy 5.0-US and 6.0-US are once again raising the bar by offering improved performance, enhanced features, and most importantly, an economical approach to residential solar. Your business model is a value chain. The new Sunny Boy-US series can help you stay competitive in an increasingly price sensitive residential market by driving down costs across all of your business operations.

Technical data	Sunny Boy 5.0-US		Sunny Boy 6.0-US	
	208 V	240 V	208 V	240 V
Input (DC)				
Max usable DC power	5300 W	5300 W	5500 W	6300 W
Max. DC Voltage	600 V			
Rated MPP Voltage range	220 – 480 V			
MPPT operating voltage range	100 – 550 V			
Min. DC voltage / start voltage	100 V / 125 V			
Max. operating input current per MPPT	10 A			
Number of MPPT tracker / string per MPPT tracker	3 / 1			
Output (AC)				
AC nominal power	5000 W	5000 W	5200 W	6000 W
Max. AC apparent power	5000 VA	5000 VA	5200 VA	6000 VA
Nominal voltage / adjustable	208 V / ●	240 V / ●	208 V / ●	240 V / ●
AC voltage range	183 – 229 V	211 – 264 V	183 – 229 V	211 – 264 V
AC grid frequency	60 Hz / 50 Hz			
Max. output current	24.0 A	24.0 A	25.0 A	25.0 A
Power factor (cos φ)	1			
Output phases / line connections	1 / 2			
Harmonics	< 4 %			
Efficiency				
Max. efficiency	97.2 %	97.5 %	97.2 %	97.6 %
CEC efficiency	96.5 %	97 %	96.5 %	97 %
Protection devices				
DC disconnect device	●			
DC reverse polarity protection	●			
Ground fault monitoring / Grid monitoring	●			
AC short circuit protection	●			
All-pole sensitive residual current monitoring unit (RCMU)	●			
Arc fault circuit interrupter (AFCI)	●			
Protection class / overvoltage category	I / IV			
General data				
Dimensions (W / H / D) in mm (in)	535 x 730 x 198 (21.1 x 28.5 x 7.8)			
Packaging Dimensions (W / H / D) in mm (in)	600 x 800 x 300 (23.6 x 31.5 x 11.8)			
Weight	26 kg (57 lb)			
Packaging weight	30 kg (66 lb)			
Operating temperature range	– 25°C ...+60°C			
Noise emission (typical)	< 25 dB(A)			
Internal power consumption at night	< 5 W			
Topology	Transformerless			
Cooling concept	Convection			
Features				
Secure Power Supply	●			
Display (2 x 16 characters)	●			
Interfaces: Ethernet / WLAN	● / ●			
Sensor module / External WLAN antenna	○ / ○			
Warranty: 10 / 15 / 20 years	●/○/○			
Certificates and approvals	UL 1741, UL 1998, UL 1699B, IEEE1547, FCC Part 15 (Class A & B), CAN/CSA V22.2 107.1-1			
● Standard features ○ Optional features – Not available Data at nominal conditions NOTE: US inverters ship with gray lids.				
Type designation	SB 5.0-1SP-US-40	SB 5.0-1SP-US-40	SB 6.0-1SP-US-40	SB 6.0-1SP-US-40

Accessories

Sensor module
MD.SEN-US-40

External WLAN antenna
EXTANT-US-40

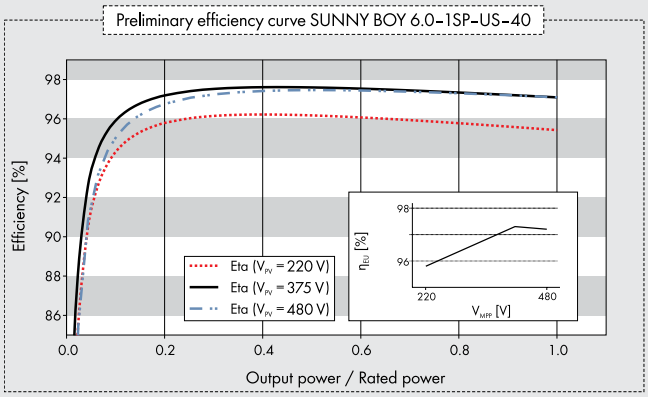

SB5.0-6.0-US-DUS160224 SMA and Sunny Boy are registered trademarks of SMA Solar Technology AG. Printed on FSC-certified paper. All products and services described as well as technical data are subject to change, even for reasons of country-specific deviations, at any time without notice. SMA assumes no liability for errors or omissions. For current information, see www.SMA-Solar.com.

SM SOLAR MOUNT

NEW ENHANCEMENTS

UNIRAC®
A HILTI GROUP COMPANY

SOLARMOUNT defined the standard in solar racking. New enhancements are designed to get installers off the roof faster than ever before. Components are pre-assembled and optimized to reduce installation steps and save labor time. Our new grounding & bonding process eliminates copper wire and grounding straps to reduce costs. Utilize the microinverter mount with a wire management clip for an easier installation.

enphase ENERGY

SOLARMOUNT INTEGRATED BONDING ADVANTAGE

WITH SYSTEM GROUNDING THROUGH ENPHASE MICROINVERTERS AND TRUNK CABLES

LOSE ALL THE COPPER & LUGS

UL2703 LISTED

BONDING & GROUNDING
MECHANICAL LOADING
SYSTEM FIRE CLASSIFICATION
CLASS A - TYPE 1, 2, 3 & 10 MODULES

TÜVRheinland US

ROOF MOUNT SYSTEMS

GET OFF THE ROOF FASTER THAN EVER BEFORE

OPTIMIZED COMPONENTS • VERSATILITY • AVAILABILITY • DESIGN TOOLS

SM SOLAR MOUNT

NEW ENHANCEMENTS

UNIRAC®
A HILTI GROUP COMPANY

OPTIMIZED COMPONENTS

INTEGRATED BONDING & PRE-ASSEMBLED PARTS

Components are pre-assembled and optimized to reduce installation steps and save labor time. Our new grounding & bonding process eliminates copper wire and grounding straps or bonding jumpers to reduce costs. Utilize the microinverter mount with a wire management clip for an easier installation.

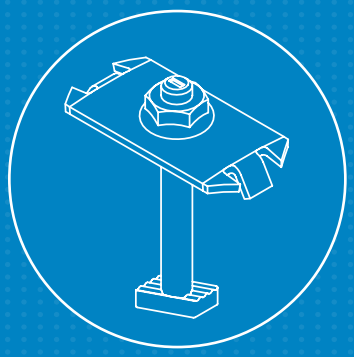

INTEGRATED BONDING MIDCLAMP

VERSATILITY

ONE PRODUCT - MANY APPLICATIONS

Quickly set modules flush to the roof or at a desired tilt angle. Change module orientation to portrait or landscape while securing a large variety of framed modules on flat, low sloped or steep pitched roofs. Available in mill, clear and dark anodized finishes to outperform your projects financial and aesthetic aspirations.

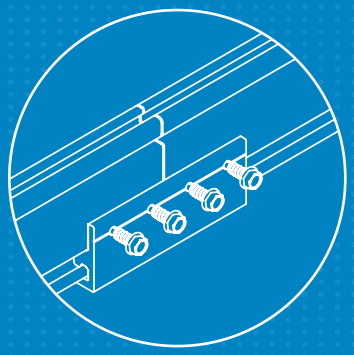

INTEGRATED BONDING SPLICE BAR

AVAILABILITY

NATIONWIDE NETWORK

Unirac maintains the largest network of stocking distributors for our racking solutions. Our partners have distinguished their level of customer support, availability, and overall value, thereby providing the highest level of service to users of Unirac products. Count on our partners for fast and accurate delivery to meet your project objectives. Visit Unirac.com for a list of distributors.

INTEGRATED BONDING L-FOOT w/ T-BOLT

AUTOMATED DESIGN TOOL

DESIGN PLATFORM AT YOUR SERVICE

Creating a bill of materials is just a few clicks away with U-Builder, a powerful online tool that streamlines the process of designing a code compliant solar mounting system. Save time by creating a user profile, and recall preferences and projects automatically when you log in. You will enjoy the ability to share projects with customers; there's no need to print results and send to a distributor, just click and share.

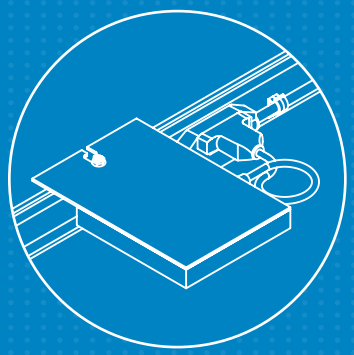

INTEGRATED BONDING MICROINVERTER MOUNT w/ WIRE MANAGEMENT

UNIRAC CUSTOMER SERVICE MEANS THE HIGHEST LEVEL OF PRODUCT SUPPORT

- UNMATCHED EXPERIENCE
- CERTIFIED QUALITY
- ENGINEERING EXCELLENCE
- BANKABLE WARRANTY
- DESIGN TOOLS
- PERMIT DOCUMENTATION

TECHNICAL SUPPORT

Unirac's technical support team is dedicated to answering questions & addressing issues in real time. An online library of documents including engineering reports, stamped letters and technical data sheets greatly simplifies your permitting and project planning process.

CERTIFIED QUALITY PROVIDER

Unirac is the only PV mounting vendor with ISO certifications for 9001:2008, 14001:2004 and OHSAS 18001:2007, which means we deliver the highest standards for fit, form, and function. These certifications demonstrate our excellence and commitment to first class business practices.

BANKABLE WARRANTY

As a Hilti Group Company, Unirac has the financial strength to back our products and reduce your risk. Have peace of mind knowing you are receiving products of exceptional quality. SOLARMOUNT is covered by a 10-year limited product warranty and a 5-year limited finish warranty.

PROTECT YOUR REPUTATION WITH QUALITY RACKING SOLUTIONS BACKED BY ENGINEERING EXCELLENCE AND A SUPERIOR SUPPLY CHAIN

© PUB - 15FEB02 - DIGITAL UPDATES

Sunmodule™

SW 240 mono / Version 2.0

World-class quality
Fully-automated production lines and seamless monitoring of the process and material ensure the quality that the company sets as its benchmark for its sites worldwide.

SolarWorld Plus-Sorting
Plus-Sorting guarantees highest system efficiency. SolarWorld only delivers modules that have greater than or equal to the nameplate rated power.

25 years linear performance guarantee and extension of product warranty to 10 years
SolarWorld guarantees a maximum performance degression of 0.7% p.a. in the course of 25 years, a significant added value compared to the two-phase warranties common in the industry. In addition, SolarWorld is offering a product warranty, which has been extended to 10 years.*

*in accordance with the applicable SolarWorld Limited Warranty at purchase.
www.solarworld.com/warranty

www.tuv.com TÜVRheinland ID: 0000022816
· Qualified, IEC 61215
· Safety tested, IEC 61730
· Periodic Inspection

1)

ISO 9001
ISO 14001
Certified

Intertek

c UL us LISTED 10SE Photovoltaic Module / Panel

Made in USA

SOLARWORLD

We turn sunlight into power.

www.solarworld.com

Sunmodule™
SW 240 mono / Version 2.0

PERFORMANCE UNDER STANDARD TEST CONDITIONS (STC)*

		SW 240
Maximum power	P_{max}	240 Wp
Open circuit voltage	V_{oc}	37.6 V
Maximum power point voltage	V_{mpp}	30.6 V
Short circuit current	I_{sc}	8.22 A
Maximum power point current	I_{mpp}	7.87 A

*STC: 1000W/m², 25°C, AM 1.5

THERMAL CHARACTERISTICS

NOCT	46 °C
TC I_{sc}	0.004 %/K
TC V_{oc}	-0.30 %/K
TC P_{mpp}	-0.45 %/K
Operating temperature	-40°C to 85°C

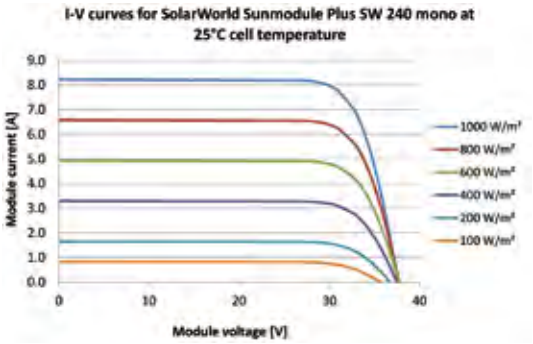

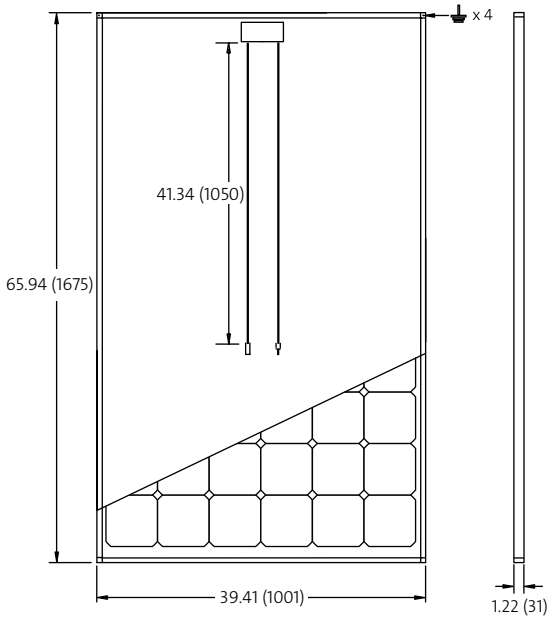

PERFORMANCE AT 800 W/m², NOCT, AM 1.5

		SW 240
Maximum power	P_{max}	175.4 Wp
Open circuit voltage	V_{oc}	34.2 V
Maximum power point voltage	V_{mpp}	27.9 V
Short circuit current	I_{sc}	6.63 A
Maximum power point current	I_{mpp}	6.30 A

Minor reduction in efficiency under partial load conditions at 25°C: at 200W/m², 95% (+/-3%) of the STC efficiency (1000 W/m²) is achieved.

COMPONENT MATERIALS

Cells per module	60
Cell type	Mono crystalline
Cell dimensions	6.14 in x 6.14 in (156 mm x 156 mm)
Front	tempered glass (EN 12150)
Frame	Clear anodized aluminum
Weight	46.7 lbs (21.2 kg)

SYSTEM INTEGRATION PARAMETERS

Maximum system voltage SC II		1000 V
Max. system voltage USA NEC		600 V
Maximum reverse current		16 A
Number of bypass diodes		3
UL Design Loads*	Two rail system	113 psf downward 64 psf upward
UL Design Loads*	Three rail system	170 psf downward 64 psf upward
IEC Design Loads*	Two rail system	113 psf downward 50 psf upward

*Please refer to the Sunmodule installation instructions for the details associated with these load cases.

ADDITIONAL DATA

Power tolerance[2)]	-0 Wp / +5 Wp
J-Box	IP65
Connector	MC4
Module efficiency	14.31 %
Fire rating (UL 790)	Class C

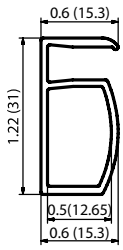

VERSION 2.0 FRAME
- Compatible with "Top-Down" mounting methods
- ⏚ Grounding Locations: 4 corners of the frame

1) Sunmodules dedicated for the United States and Canada are tested to UL 1703 Standard and listed by a third party laboratory. The laboratory may vary by product and region. Check with your SolarWorld representative to confirm which laboratory has a listing for the product.
2) Measuring tolerance traceable to TUV Rheinland: +/- 2% (TUV Power Controlled).
3) All units provided are imperial. SI units provided in parentheses.

SolarWorld AG reserves the right to make specification changes without notice.

CITY OF SARATOGA SPRINGS

DESIGN REVIEW COMMISSION

City Hall - 474 Broadway
Saratoga Springs, New York 12866
Tel: 518-587-3550 x.515 fax: 518-580-9480
www.saratoga-springs.org

[FOR OFFICE USE]

_____ (Application #)

_____ (Date received)

ARCHITECTURAL / HISTORIC REVIEW APPLICATION

	APPLICANT(S)*	OWNER(S) *(If not applicant)*	ATTORNEY/AGENT
Name	Kwang Pai		
Address	30 Gick Rd Saratoga Springs, NY 1286(		
Phone	[redacted]	/	/
Email	[redacted]		

Identify primary contact person: ■ Applicant ☐ Owner ☐ Attorney/Agent

* An applicant must be the property owner, lessee, or one with an option to lease or purchase the property in question.

Applicant's interest in premises: ■ Owner ☐ Lessee ☐ Under option to lease or purchase

PROPERTY INFORMATION

Property Address/Location: 30 Gick Road Saratoga Springs, NY 12866 Tax Parcel #: 153 . 1 - 1 - 1
(*for example: 165.52 – 4 – 37*)

Current Zoning District: _____ Property use: ☐ Residential ■ Non-residential/mixed-use

Type of Review: ■ Architectural ☐ Historic ☐ Extension/modification (of current approval)

Summary description of proposed action:
Approval was given for west side facade in September of 2013, but it has expired. This is to request permission to make an improvement to the building by adding a facade on the west side and south side of the building to match the east side.

Has a previous application been filed with the DRC for this property? ☐ No ■ Yes – date(s)? _____

- App. No.(s)? _____

APPLICATION FEE (payable to "Commissioner of Finance"):

Residential Structures (principal, accessory)	$25	Non-residential / mixed-use structures (principal)	$300
Residential approval – extension	$25	Non-residential signs, awnings, accessory structures	$100
Residential - administrative action	$25	Non-residential approval – extension	$100
		Non-residential - administrative action	$100

A "complete" application consists of **1 original, 9 hard copies, and 1 electronic copy of application & ALL other materials as required below:

New Construction / Additions

- ☐ Color photographs showing site/exterior details of existing structures and adjacent properties
- ☐ Site plan, drawn to scale, showing existing & proposed construction, property lines & dimensions, required & proposed setbacks & lot coverage, site features (fences, walks, trees, etc.); on no larger than 2'x3' sheet – smaller preferred if legible
- ☐ Elevation drawings showing design of all sides of existing & proposed construction – label dimensions, colors, materials, lighting (fixture & lamp type, wattage), etc. - include compass bearing & scale; no larger than 2'x3' sheet – smaller permitted if legible
- ☐ Floor plans for proposed structure; on sheet no larger than 2'x3' – smaller permitted if legible
- ☐ Product literature, specifications and samples of proposed materials and colors

Change in exterior building materials (windows, doors, roof, siding, etc.), or color (in non-residential districts only)

- ☐ Color photographs showing site/exterior details of existing structures and that illustrate affected features
- ☐ Elevation drawings showing all sides of existing & proposed construction – label dimensions, colors, materials, lighting (fixture & lamp type, wattage), etc. - include compass bearing & scale; no larger than 2'x3' sheet – smaller permitted if legible
- ☐ Product literature, specifications and samples of proposed materials and colors

Within front yard setbacks in Historic Districts only (Front setbacks: UR-1 & INST-HTR=30'; UR-4=25'; UR-2, UR-3 & NCUD-1=10')

- Installation, removal or change in material of drive- and walkways
- Installation or removal of architectural, sculptural or vegetative screening over 3' in height
- Installation of accessory utility structures or radio/satellite transmission/reception devices (more than 2' diameter)

For any of above:

- ☐ Color photographs showing site/exterior details of existing structures, and of adjacent properties
- ☐ Site plan showing existing & proposed construction: include property lines & dimensions, required & proposed setbacks & lot coverage, site features (fences, walks, trees, etc.) street names, compass bearing & scale; no larger than 2'x3' sheet – smaller preferred if legible
- ☐ Product literature, specifications and samples of proposed materials and colors

Signage / Awnings

- ☐ Color photographs showing site/exterior details of existing structures, and adjacent properties
- ☐ Plan showing location of proposed sign/awning structure on building/premises: no larger than 11"x17"
- ☐ Scaled illustration of proposed sign/awning structure and lettering (front view & profile): include all dimensions of structure; type, dimensions and style of lettering or logo; description of colors, materials, mounting method and hardware
- ☐ Descriptions, specifications of proposed lighting including fixture & lamp type, wattage, mounting method, and location
- ☐ Product literature, specifications and samples of proposed materials and colors

Demolition

- ☐ Color photographs showing site/exterior details of existing structures, and of adjacent properties
- ☐ Site plan showing existing and any proposed structures - include dimensions, setbacks, street names, compass bearing, and scale
- ☐ Written description of reasons for demolition and, in addition:
  - ☐ For structures of "architectural/historical significance", demonstrate "good cause" why structure cannot be preserved
  - ☐ For structures in an architectural district that might be eligible for listing on National Register of Historic Places, or for a "contributing" structure in a National Register district (contact City staff), provide plans for site development following demolition - include a timetable and letter of credit for project completion

Telecommunication facilities

- ☐ Color photographs showing site/existing structures, and of adjacent properties
- ☐ Site plan showing existing and proposed structures: include dimensions, setbacks, street names, compass bearing, and scale
- ☐ Scaled illustration of proposed structures: include all dimensions; colors, materials, lighting, mounting details
- ☐ Consult Article 240-12.22 of the City's Zoning Ordinance and City staff to ensure compliance with requirements for visual impact assessment and existing and proposed vegetative screening

Request for extension of current approval

☐ Identify date of original DRC approval: _____Current expiration date: _____ Org. App. No. _____

☐ Describe why this extension is necessary and whether any significant changes have occurred either on the site or in the neighborhood.

SEQR Environmental Assessment Form

☐ Applicants proposing the following must complete "Part I" of the SEQR Short Environmental Assessment Form (available here: http://www.dec.ny.gov/docs/permits_ej_operations_pdf/seafpartone.pdf):

- Construction or expansion of a multi-family residential structure (4 units +)
- Construction or expansion (exceeding 4,000 sq. ft. gross floor area) of a principal or accessory non-residential structure
- Telecommunications facility, radio antennae, satellite dishes
- Demolition

Disclosure

Does any City officer, employee or family member thereof have a financial interest (as defined by General Municipal Law Section 809) in this application?

■ No ☐ Yes - If yes, a statement disclosing the name, residence, nature, and extent of this interest must be filed with this application.

Certification

I/we, the property owner(s), or purchaser(s)/lessee(s) under contract, of the land in question, hereby request an appearance before the Design Review Commission.

By the signature(s) attached hereto, I/we certify that the information provided within this application and accompanying documentation is, to the best of my/our knowledge, true and accurate. I/we further understand that intentionally providing false or misleading information is grounds for immediate denial of this application.

I/we hereby authorize the members of the Design Review Commission and designated City staff to enter the property associated with this application for purposes of conducting any necessary site inspections relating to this application.

Furthermore, I/we agree to meet all requirements under Article VII for Historic Review or Article VIII for Architectural Review of the Zoning Code of the City of Saratoga Springs.

_____ Date: 9/16/2016

(applicant signature)

_____ Date: _____

(applicant signature)

If applicant is not the currently the owner of the property, the current owner must also sign.

Owner Signature: _____ Date: _____

Owner Signature: _____ Date: _____

FOR OFFICE USE ONLY

This application has been reviewed by the Zoning Enforcement Officer and is being forwarded to the Commission.

Signature: _____ Date: _____

Additional Comments: _____

_____

_____

_____

_____

_____

_____

_____

_____

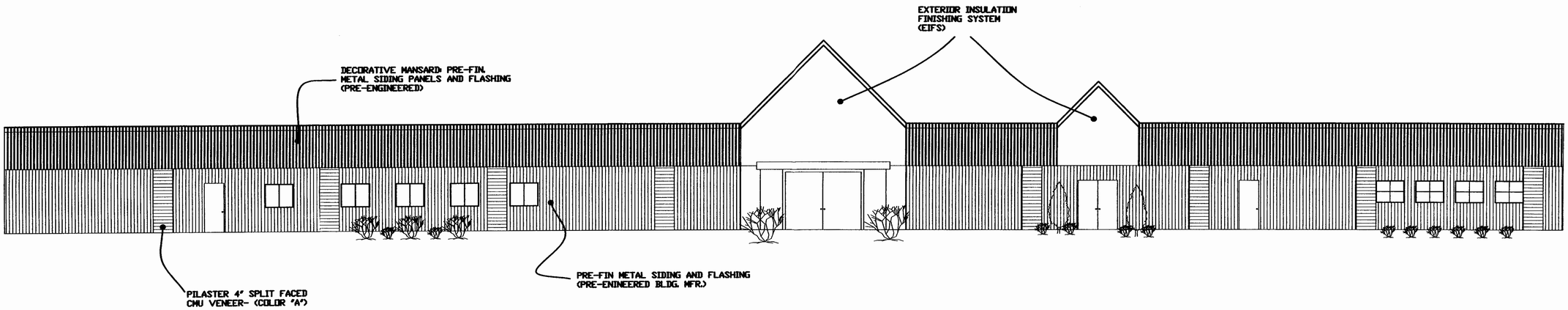

ALL MATERIALS TO MATCH EAST SIDE ELEVATION

PROPOSED RENOVATIONS

BLDG OF KWANG PAI

30 Glick Road Lot 1

Town of Saratoga Springs — County of Saratoga

Job # 13-01-

JENSEN CONSTRUCTION GROUP
6 Industry Drive
Waterford, N.Y. 12188
(518) 235-7715

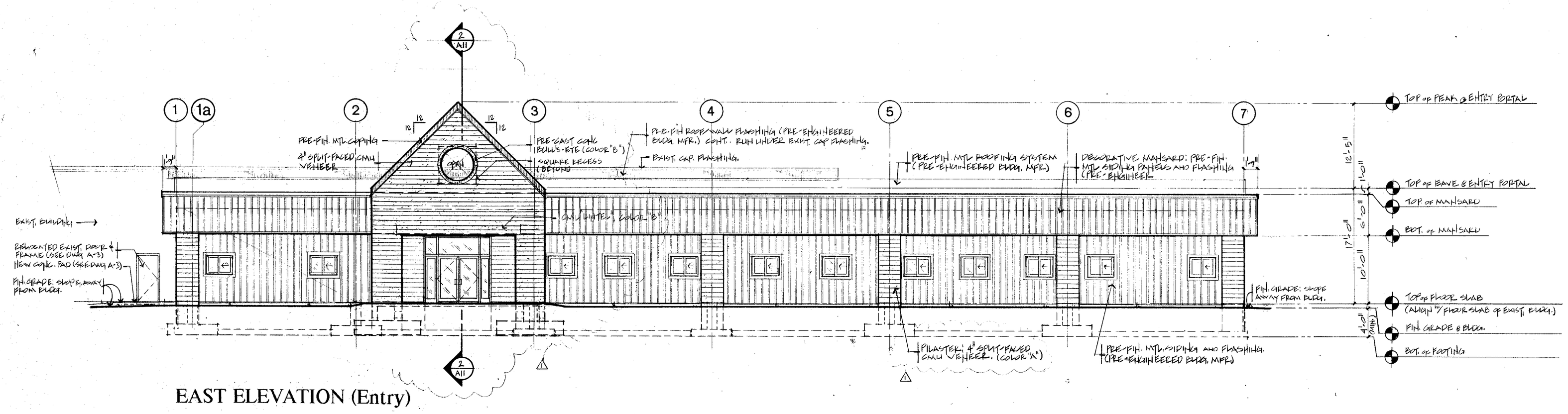

EAST ELEVATION (Entry)

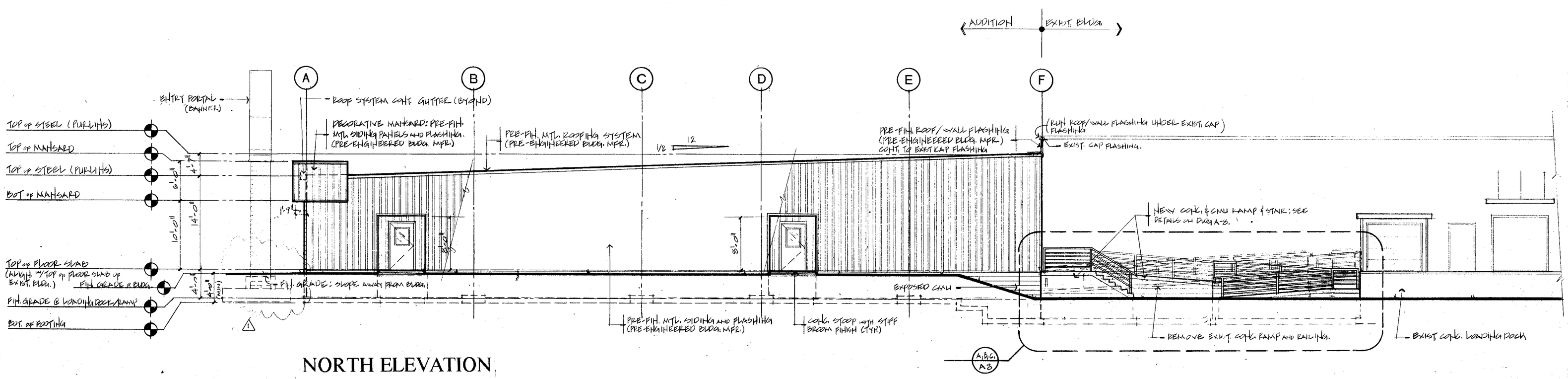

NORTH ELEVATION

HOFFMAN VILARDO ARCHITECTS

6 FRANKLIN SQUARE
SARATOGA SPRINGS
NEW YORK 12866
(518) 583-0525

1997 Copyright ©
Hoffman/Vilardo Architects

ADDITION TO COSCO BUILDING

FOR

WASHINGTON·SARATOGA
WARREN·HAMILTON·ESSEX

B.O.C.E.S.

PLAZA 15

SARATOGA SPRINGS, NEW YORK

SHEET TITLE

■ ELEVATIONS

Drawn By: J.F.V.

Checked By: G.E.H.

Date: 13 JAN. '98

Scale: 1/8"=1'-0"

REVISIONS

■ ISSUED FOR PERMIT 01/15/98 GEH

△1 ADD'L NOTES, REV'S: CMU & ENTRY PORTAL (BANNER) 02/25/98 GEH

Comm. No.: 9721.10

Sheet Number: A-6

DO NOT SCALE DRAWINGS

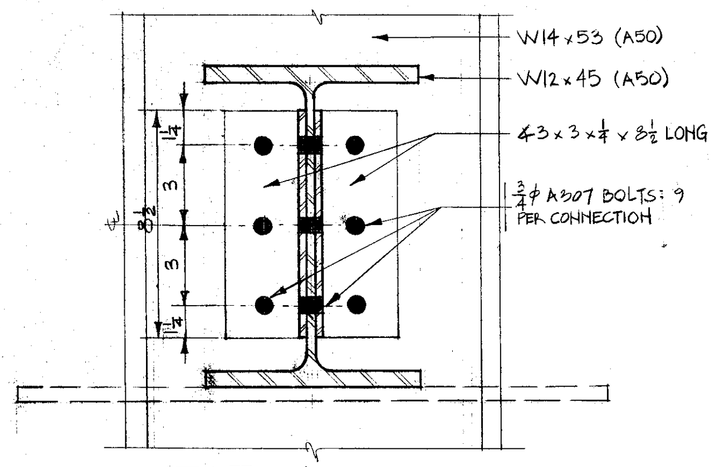

C-1 DETAIL
3 = 1'-0

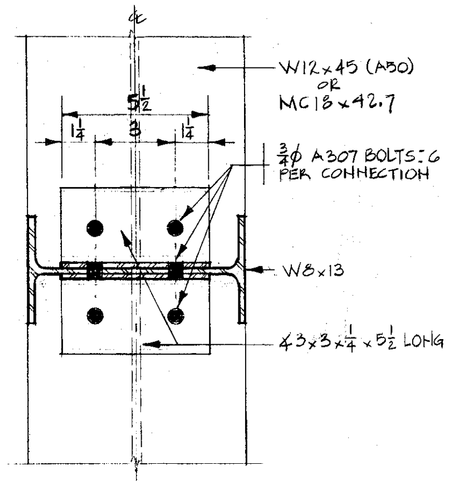

C-2 DETAIL
3 = 1'-0

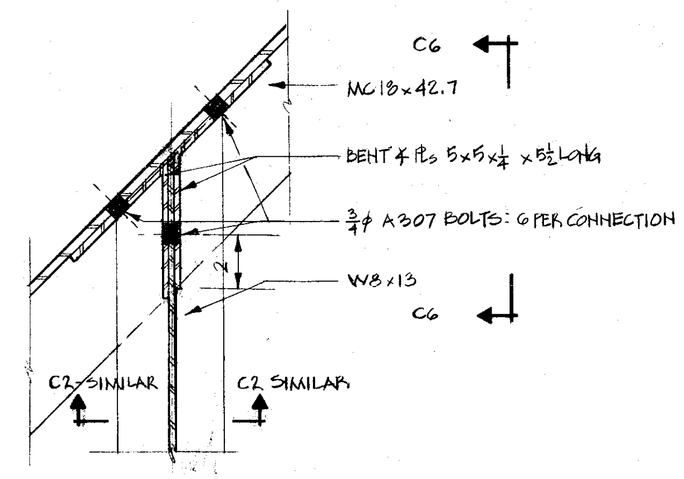

C-3 DETAIL
3 = 1'-0

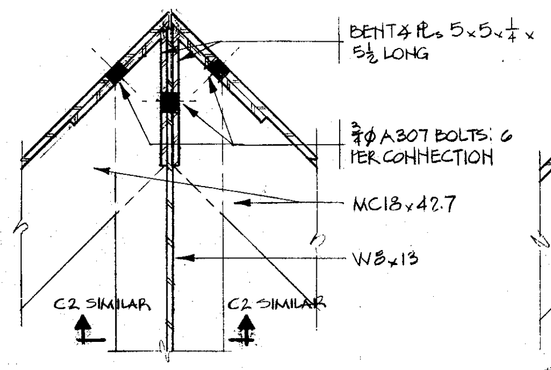

C-4 DETAIL
3 = 1'-0

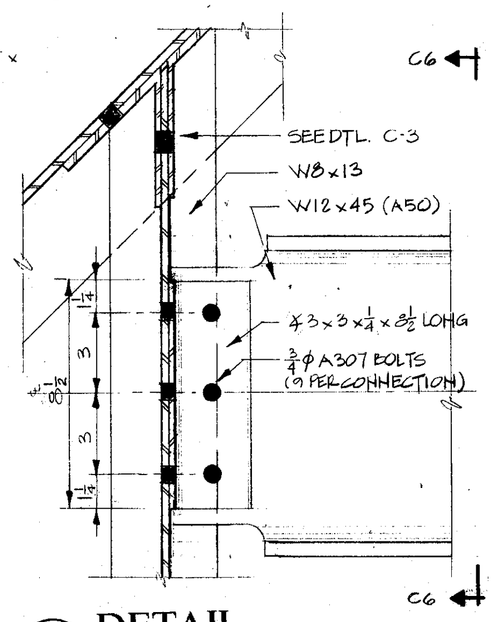

C-5 DETAIL
3 = 1'-0

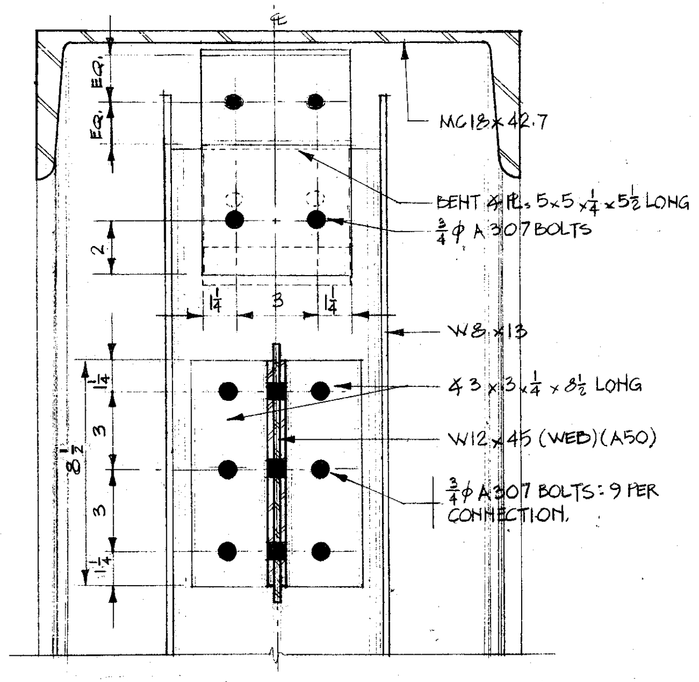

C-6 DETAIL
3 = 1'-0

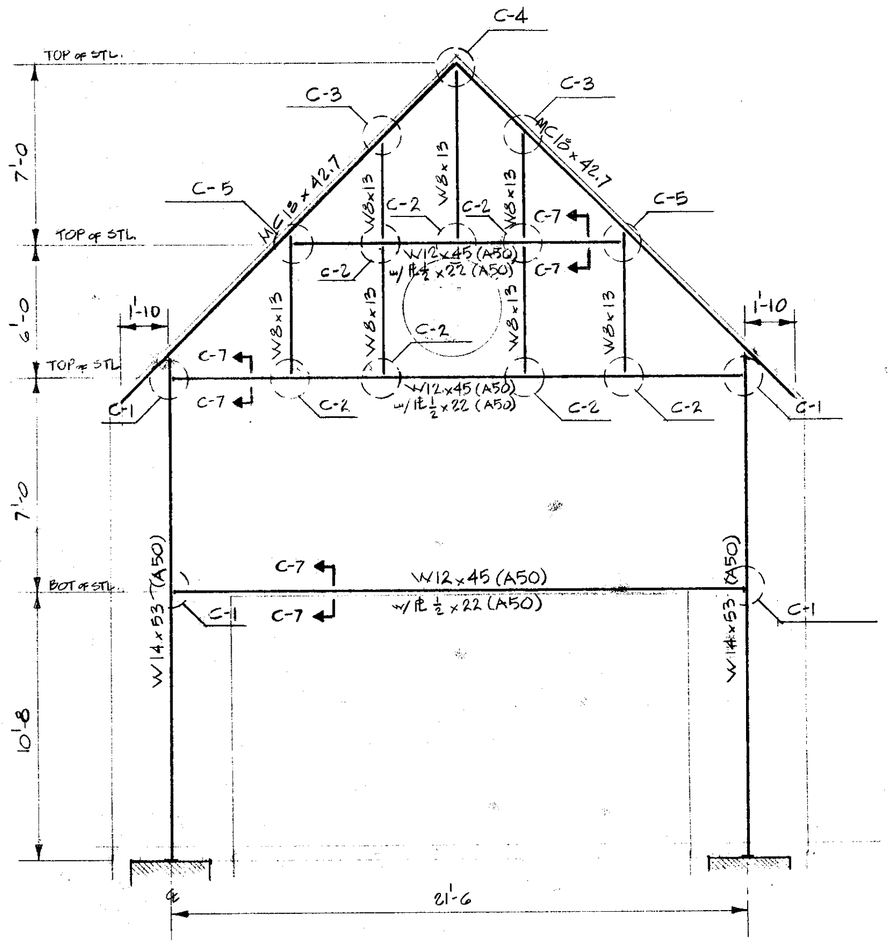

ELEVATION: STEEL FRAMING
1/4 = 1'-0

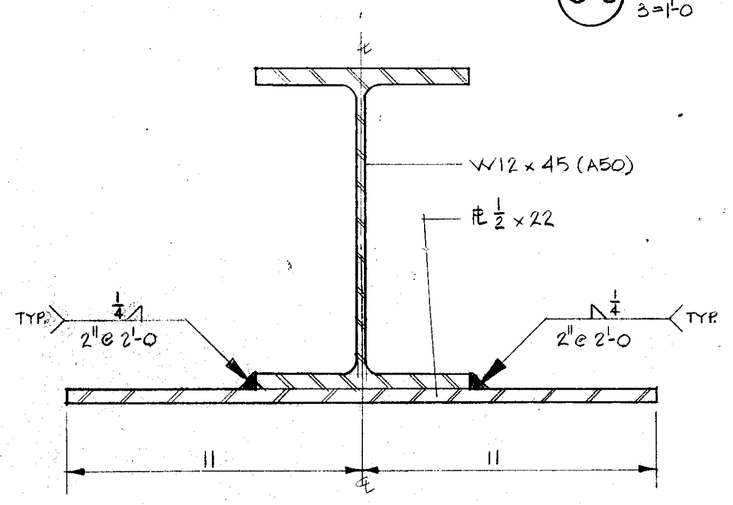

C-7 DETAIL
3 = 1'-0

NOTE:
UNLESS NOTED OTHERWISE, ALL STEEL IS A36.

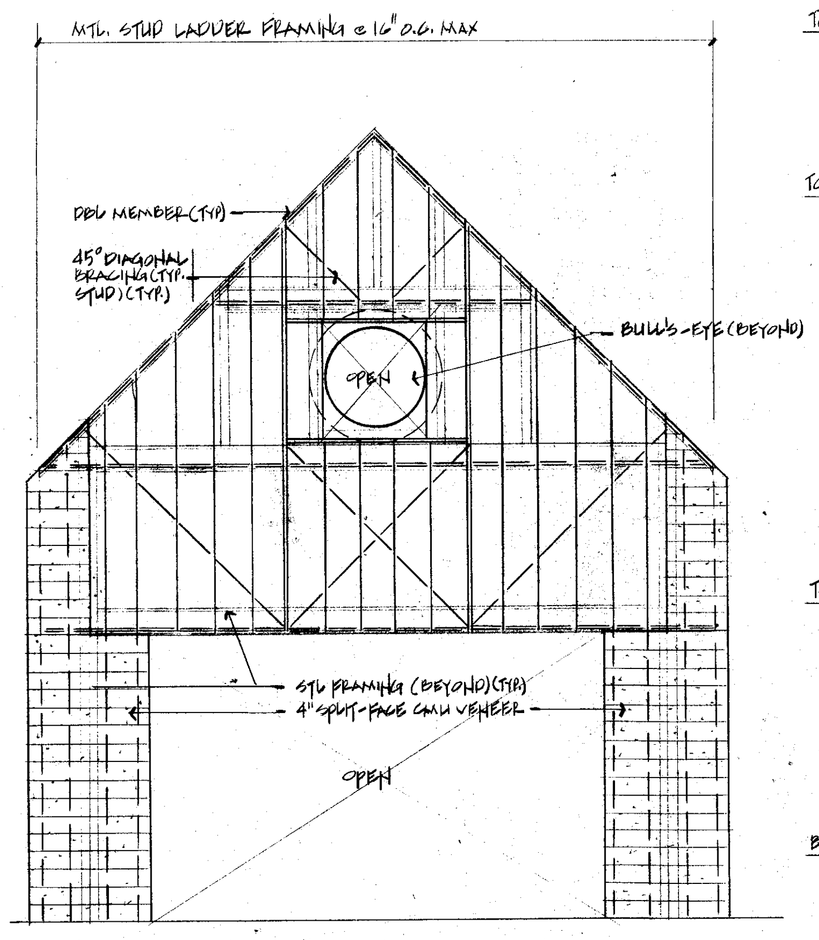

1 REAR ELEVATION: LIGHT GAGE METAL FRAMING
1/4" = 1'-0"

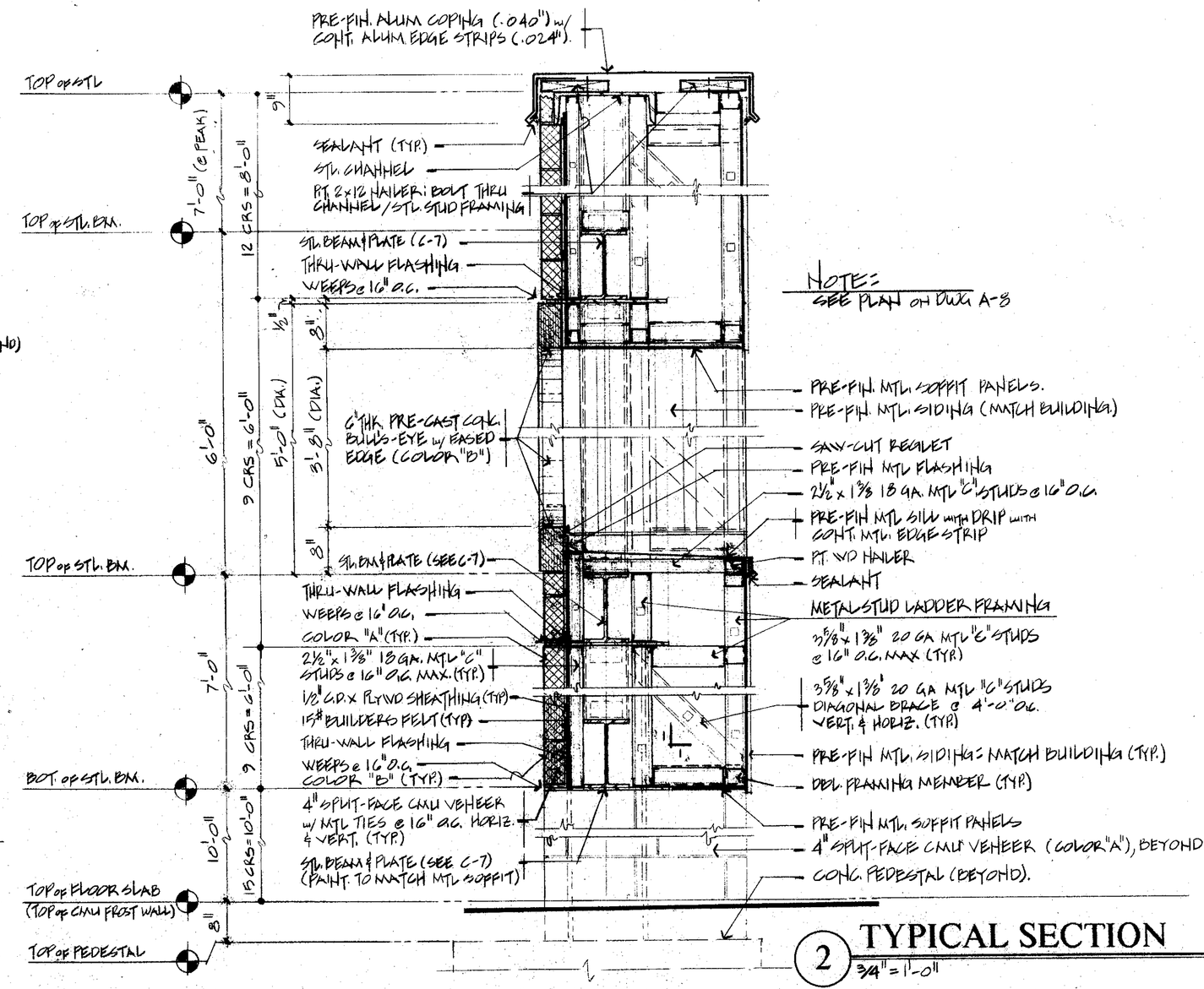

NOTE:
SEE PLAN on DWG A-3

2 TYPICAL SECTION
3/4" = 1'-0"

HOFFMAN VILARDO ARCHITECTS

6 FRANKLIN SQUARE
SARATOGA SPRINGS,
NEW YORK 12866
(518) 583-0525

1998 Copyright ©
Hoffman/Vilardo Architects

ROBERT L. FLANSBURG, P.E.
STRUCTURAL ENGINEER

ADDITION TO COSCO BUILDING

FOR

WASHINGTON·SARATOGA
WARREN·HAMILTON·ESSEX
B.O.C.E.S.

PLAZA 15

SARATOGA SPRINGS, NEW YORK

SHEET TITLE
ENTRY PORTAL
- TYP. SECTION
- STEEL FRAMING ELEV.
- STEEL DETAILS

Drawn By: J.F.V.
Checked By: R.L.F.
Date: 25 FEB '98
Scale: AS NOTED

REVISIONS

Comm. No.: 9721.10

Sheet Number:
A-11

DO NOT SCALE DRAWINGS

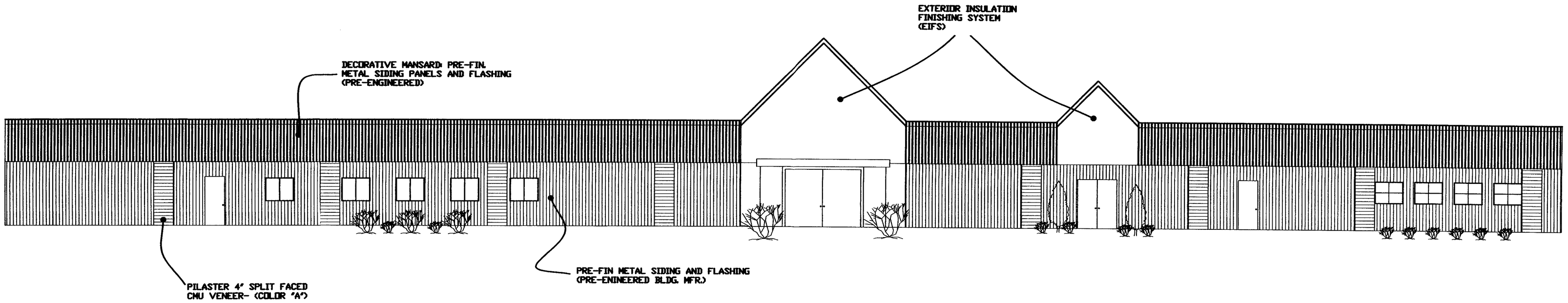

ALL MATERIALS TO MATCH EAST SIDE ELEVATION

PROPOSED RENOVATIONS

BLDG OF KWANG PAI

30 Glick Road Lot 1

Town of Saratoga Springs County of Saratoga

Job # 13-01-

PAI'S MARTIAL ARTS

B
PAK'S MAR

BUILDING
B

BUILDING
B

ENVISION architects

ORIGINAL DESIGN
SARATOGA SPRINGS CITY CENTER PARKING STRUCTURE

Scale:

ENVISION architects

REVISED DESIGN - VIEW 1
SARATOGA SPRINGS CITY CENTER PARKING STRUCTURE

Scale:

ENVISION architects

REVISED DESIGN VIEW 2
SARATOGA SPRINGS CITY CENTER PARKING STRUCTURE

Scale:

The LA GROUP
Landscape Architecture & Engineering P.C.
People. Purpose. Place.

40 Long Alley
Saratoga Springs
NY 12866
[redacted]
www.thelagroup.com

LETTER OF TRANSMITTAL

TO: Saratoga Springs Planning Department
City Hall
Saratoga Springs, NY 12866

DATE: 6/22/2016 JOB NO.: 201575

RE: 246 West Avenue Apartments

WE ARE SENDING YOU ☑ Attached ☐ Under separate cover via_____the following items

☐ Shop drawings ☐ Prints ☐ Plans ☐ Samples ☐ Specifications
☐ Copy of letter ☐ Change order ☐ _____

COPIES	DATE	NO.	DESCRIPTION
3			Full size Elevations and Floor Plans
1			Application fee check for $750
3			11X17 perspectives
3			Architectural/Historic Review Application
3			Short EAF
1			CD of application materials

THESE ARE TRANSMITTED as checked below:

☐ For approval ☐ Approved as submitted ☐ Resubmit_____copies for approval
☐ For your records ☐ Approved as noted ☐ Submit_____copies for distribution
☐ As requested ☐ Return for corrections ☐ Return _____corrected prints
☑ For review and comments ☐ _____
☐ FOR BIDS DUE _____20_____ ☐ PRINTS RETURNED AFTER LOAN TO US

REMARKS:

cc: SIGNED:_____

If enclosures are not as noted, kindly notify us at once.

CITY OF SARATOGA SPRINGS

DESIGN REVIEW COMMISSION

City Hall - 474 Broadway
Saratoga Springs, New York 12866
Tel: 518-587-3550 x.515 fax: 518-580-9480
www.saratoga-springs.org

[FOR OFFICE USE]

_____ (Application #)

_____ (Date received)

ARCHITECTURAL / HISTORIC REVIEW APPLICATION

	APPLICANT(S)*	OWNER(S) *(If not applicant)*	ATTORNEY/AGENT
Name	JOHN PAUL BUILDERS, LLC	246 WEST AVENUE, INC	JON LAPPER, ESQ
Address	796 BURDECK STREET	84 EVERETT ROAD	[redacted]
	SCHENECTADY, NY 12306	ALBANY, NY 12205	
Phone	[redacted]	/	
Email			

Identify primary contact person: ☐ Applicant ☐ Owner ☒ Attorney/Agent

* An applicant must be the property owner, lessee, or one with an option to lease or purchase the property in question.

Applicant's interest in premises: ☐ Owner ☐ Lessee ☒ Under option to lease or purchase

PROPERTY INFORMATION

Property Address/Location: 246 WEST AVE Tax Parcel #: 178 . 33 - 1 - 20&21
(for example: 165.52 – 4 – 37)

Current Zoning District: T-4 Property use: ☒ Residential ☐ Non-residential/mixed-use

Type of Review: ☒ Architectural ☐ Historic ☐ Extension/modification (of current approval)

Summary description of proposed action:

16 APARTMENT UNITS WITHIN A THREE STORY BUILDING WITH PARKING ON THE FIRST FLOOR. THE SITE WILL INCLUDE SURFACE PARKING. THE PROJECT WILL EXTEND A WATERLINE TO THE SITE FOR SERVICE.

Has a previous application been filed with the DRC for this property? ☐ No ☒ Yes – date(s)? APROVED 2/2012 +/-

- App. No.(s)? _____

APPLICATION FEE (payable to "Commissioner of Finance"):

Residential Structures (principal, accessory)	$25	Non-residential / mixed-use structures (principal)	$300
Residential approval – extension	$25	Non-residential signs, awnings, accessory structures	$100
Residential - administrative action	$25	Non-residential approval – extension	$100
		Non-residential - administrative action	$100

**A "complete" application consists of 1 original, 9 hard copies, and 1 electronic copy of application & ALL other materials as required below:

New Construction / Additions

- ☐ Color photographs showing site/exterior details of existing structures and adjacent properties
- ☐ Site plan, drawn to scale, showing existing & proposed construction, property lines & dimensions, required & proposed setbacks & lot coverage, site features (fences, walks, trees, etc.); on no larger than 2'x3' sheet – smaller preferred if legible
- ☐ Elevation drawings showing design of all sides of existing & proposed construction – label dimensions, colors, materials, lighting (fixture & lamp type, wattage), etc. - include compass bearing & scale; no larger than 2'x3' sheet – smaller permitted if legible
- ☐ Floor plans for proposed structure; on sheet no larger than 2'x3' – smaller permitted if legible
- ☐ Product literature, specifications and samples of proposed materials and colors

Change in exterior building materials (windows, doors, roof, siding, etc.), or color (in non-residential districts only)

- ☐ Color photographs showing site/exterior details of existing structures and that illustrate affected features
- ☐ Elevation drawings showing all sides of existing & proposed construction – label dimensions, colors, materials, lighting (fixture & lamp type, wattage), etc. - include compass bearing & scale; no larger than 2'x3' sheet – smaller permitted if legible
- ☐ Product literature, specifications and samples of proposed materials and colors

Within front yard setbacks in Historic Districts only (Front setbacks: UR-1 & INST-HTR=30'; UR-4=25'; UR-2, UR-3 & NCUD-1=10')

- Installation, removal or change in material of drive- and walkways
- Installation or removal of architectural, sculptural or vegetative screening over 3' in height
- Installation of accessory utility structures or radio/satellite transmission/reception devices (more than 2' diameter)

For any of above:

- ☐ Color photographs showing site/exterior details of existing structures, and of adjacent properties
- ☐ Site plan showing existing & proposed construction: include property lines & dimensions, required & proposed setbacks & lot coverage, site features (fences, walks, trees, etc.) street names, compass bearing & scale; no larger than 2'x3' sheet – smaller preferred if legible
- ☐ Product literature, specifications and samples of proposed materials and colors

Signage / Awnings

- ☐ Color photographs showing site/exterior details of existing structures, and adjacent properties
- ☐ Plan showing location of proposed sign/awning structure on building/premises: no larger than 11"x17"
- ☐ Scaled illustration of proposed sign/awning structure and lettering (front view & profile): include all dimensions of structure; type, dimensions and style of lettering or logo; description of colors, materials, mounting method and hardware
- ☐ Descriptions, specifications of proposed lighting including fixture & lamp type, wattage, mounting method, and location
- ☐ Product literature, specifications and samples of proposed materials and colors

Demolition

- ☐ Color photographs showing site/exterior details of existing structures, and of adjacent properties
- ☐ Site plan showing existing and any proposed structures - include dimensions, setbacks, street names, compass bearing, and scale
- ☐ Written description of reasons for demolition and, in addition:
  - ☐ For structures of "architectural/historical significance", demonstrate "good cause" why structure cannot be preserved
  - ☐ For structures in an architectural district that might be eligible for listing on National Register of Historic Places, or for a "contributing" structure in a National Register district (contact City staff), provide plans for site development following demolition - include a timetable and letter of credit for project completion

Telecommunication facilities

- ☐ Color photographs showing site/existing structures, and of adjacent properties
- ☐ Site plan showing existing and proposed structures: include dimensions, setbacks, street names, compass bearing, and scale
- ☐ Scaled illustration of proposed structures: include all dimensions; colors, materials, lighting, mounting details
- ☐ Consult Article 240-12.22 of the City's Zoning Ordinance and City staff to ensure compliance with requirements for visual impact assessment and existing and proposed vegetative screening

Request for extension of current approval

☐ Identify date of original DRC approval: 2/2012+/- Current expiration date: EXPIRED Org. App. No. _____

☐ Describe why this extension is necessary and whether any significant changes have occurred either on the site or in the neighborhood.

SEQR Environmental Assessment Form

☒ Applicants proposing the following must complete "Part I" of the SEQR Short Environmental Assessment Form (available here: http://www.dec.ny.gov/docs/permits_ej_operations_pdf/seafpartone.pdf):

- Construction or expansion of a multi-family residential structure (4 units +)
- Construction or expansion (exceeding 4,000 sq. ft. gross floor area) of a principal or accessory non-residential structure
- Telecommunications facility, radio antennae, satellite dishes
- Demolition

Disclosure

Does any City officer, employee or family member thereof have a financial interest (as defined by General Municipal Law Section 809) in this application?

☒ No ☐ Yes - If yes, a statement disclosing the name, residence, nature, and extent of this interest must be filed with this application.

Certification

I/we, the property owner(s), or purchaser(s)/lessee(s) under contract, of the land in question, hereby request an appearance before the Design Review Commission.

By the signature(s) attached hereto, I/we certify that the information provided within this application and accompanying documentation is, to the best of my/our knowledge, true and accurate. I/we further understand that intentionally providing false or misleading information is grounds for immediate denial of this application.

I/we hereby authorize the members of the Design Review Commission and designated City staff to enter the property associated with this application for purposes of conducting any necessary site inspections relating to this application.

Furthermore, I/we agree to meet all requirements under Article VII for Historic Review or Article VIII for Architectural Review of the Zoning Code of the City of Saratoga Springs.

_____ Date: 6/22/16

(applicant signature)

_____ Date: _____

(applicant signature)

If applicant is not the currently the owner of the property, the current owner must also sign.

Owner Signature: _____ Date: 6/22/16

Owner Signature: _____ Date: _____

617.20
Appendix B
Short Environmental Assessment Form

Instructions for Completing

Part 1 - Project Information. The applicant or project sponsor is responsible for the completion of Part 1. Responses become part of the application for approval or funding, are subject to public review, and may be subject to further verification. Complete Part 1 based on information currently available. If additional research or investigation would be needed to fully respond to any item, please answer as thoroughly as possible based on current information.

Complete all items in Part 1. You may also provide any additional information which you believe will be needed by or useful to the lead agency; attach additional pages as necessary to supplement any item.

Part 1 - Project and Sponsor Information		
Name of Action or Project: 246 West Avenue Apartments		
Project Location (describe, and attach a location map): 246 West Avenue		
Brief Description of Proposed Action: 16 residential units with associated parking. Watermain extension along West Ave.		
Name of Applicant or Sponsor:	Telephone:	
	E-Mail:	
Address:		
City/PO:	State:	Zip Code:

	NO	YES
1. Does the proposed action only involve the legislative adoption of a plan, local law, ordinance, administrative rule, or regulation? If Yes, attach a narrative description of the intent of the proposed action and the environmental resources that may be affected in the municipality and proceed to Part 2. If no, continue to question 2.	X	
2. Does the proposed action require a permit, approval or funding from any other governmental Agency? If Yes, list agency(s) name and permit or approval: Site plan and Special use permit(Saratoga Springs Planning Board) Saratoga Springs Design review commission approval		X

3.a. Total acreage of the site of the proposed action? .51 acres
b. Total acreage to be physically disturbed? .51 acres
c. Total acreage (project site and any contiguous properties) owned or controlled by the applicant or project sponsor? .51 acres

4. Check all land uses that occur on, adjoining and near the proposed action.

☐ Urban ☐ Rural (non-agriculture) ☐ Industrial ☒ Commercial ☐ Residential (suburban)
☐ Forest ☒ Agriculture ☐ Aquatic ☒ Other (specify): YMCA
☐ Parkland

	NO	YES	N/A
5. Is the proposed action,			
a. A permitted use under the zoning regulations?		X	
b. Consistent with the adopted comprehensive plan?		X	

	NO	YES
6. Is the proposed action consistent with the predominant character of the existing built or natural landscape?		X
7. Is the site of the proposed action located in, or does it adjoin, a state listed Critical Environmental Area? If Yes, identify: _____	X	
8. a. Will the proposed action result in a substantial increase in traffic above present levels?	X	
b. Are public transportation service(s) available at or near the site of the proposed action?	X	
c. Are any pedestrian accommodations or bicycle routes available on or near site of the proposed action?		X
9. Does the proposed action meet or exceed the state energy code requirements? If the proposed action will exceed requirements, describe design features and technologies: _____		X
10. Will the proposed action connect to an existing public/private water supply? If No, describe method for providing potable water: _____		X
11. Will the proposed action connect to existing wastewater utilities? If No, describe method for providing wastewater treatment: _____		X
12. a. Does the site contain a structure that is listed on either the State or National Register of Historic Places?	X	
b. Is the proposed action located in an archeological sensitive area?		X
13. a. Does any portion of the site of the proposed action, or lands adjoining the proposed action, contain wetlands or other waterbodies regulated by a federal, state or local agency?	X	
b. Would the proposed action physically alter, or encroach into, any existing wetland or waterbody? If Yes, identify the wetland or waterbody and extent of alterations in square feet or acres: _____	X	

14. Identify the typical habitat types that occur on, or are likely to be found on the project site. Check all that apply:

☐ Shoreline ☐ Forest ☐ Agricultural/grasslands ☒ Early mid-successional

☐ Wetland ☐ Urban ☐ Suburban

	NO	YES
15. Does the site of the proposed action contain any species of animal, or associated habitats, listed by the State or Federal government as threatened or endangered?	X	
16. Is the project site located in the 100 year flood plain?	X	
17. Will the proposed action create storm water discharge, either from point or non-point sources? If Yes, a. Will storm water discharges flow to adjacent properties? ☐ NO ☒ YES		X
b. Will storm water discharges be directed to established conveyance systems (runoff and storm drains)? If Yes, briefly describe: ☐ NO ☒ YES The stormwater design will connect the overflow from the system to an existing city storm main within West Ave.		

	NO	YES
18. Does the proposed action include construction or other activities that result in the impoundment of water or other liquids (e.g. retention pond, waste lagoon, dam)? If Yes, explain purpose and size: _____	X	
19. Has the site of the proposed action or an adjoining property been the location of an active or closed solid waste management facility? If Yes, describe: _____	X	
20. Has the site of the proposed action or an adjoining property been the subject of remediation (ongoing or completed) for hazardous waste? If Yes, describe: _____	X	

I AFFIRM THAT THE INFORMATION PROVIDED ABOVE IS TRUE AND ACCURATE TO THE BEST OF MY KNOWLEDGE

Applicant/sponsor name: _____ Date: _____

Signature: _____

Part 2 - Impact Assessment. The Lead Agency is responsible for the completion of Part 2. Answer all of the following questions in Part 2 using the information contained in Part 1 and other materials submitted by the project sponsor or otherwise available to the reviewer. When answering the questions the reviewer should be guided by the concept "Have my responses been reasonable considering the scale and context of the proposed action?"

	No, or small impact may occur	Moderate to large impact may occur
1. Will the proposed action create a material conflict with an adopted land use plan or zoning regulations?		
2. Will the proposed action result in a change in the use or intensity of use of land?		
3. Will the proposed action impair the character or quality of the existing community?		
4. Will the proposed action have an impact on the environmental characteristics that caused the establishment of a Critical Environmental Area (CEA)?		
5. Will the proposed action result in an adverse change in the existing level of traffic or affect existing infrastructure for mass transit, biking or walkway?		
6. Will the proposed action cause an increase in the use of energy and it fails to incorporate reasonably available energy conservation or renewable energy opportunities?		
7. Will the proposed action impact existing: a. public / private water supplies?		
b. public / private wastewater treatment utilities?		
8. Will the proposed action impair the character or quality of important historic, archaeological, architectural or aesthetic resources?		
9. Will the proposed action result in an adverse change to natural resources (e.g., wetlands, waterbodies, groundwater, air quality, flora and fauna)?		

	No, or small impact may occur	Moderate to large impact may occur
10. Will the proposed action result in an increase in the potential for erosion, flooding or drainage problems?		
11. Will the proposed action create a hazard to environmental resources or human health?		

Part 3 - Determination of significance. The Lead Agency is responsible for the completion of Part 3. For every question in Part 2 that was answered "moderate to large impact may occur", or if there is a need to explain why a particular element of the proposed action may or will not result in a significant adverse environmental impact, please complete Part 3. Part 3 should, in sufficient detail, identify the impact, including any measures or design elements that have been included by the project sponsor to avoid or reduce impacts. Part 3 should also explain how the lead agency determined that the impact may or will not be significant. Each potential impact should be assessed considering its setting, probability of occurring, duration, irreversibility, geographic scope and magnitude. Also consider the potential for short-term, long-term and cumulative impacts.

☐ Check this box if you have determined, based on the information and analysis above, and any supporting documentation, that the proposed action may result in one or more potentially large or significant adverse impacts and an environmental impact statement is required.

☐ Check this box if you have determined, based on the information and analysis above, and any supporting documentation, that the proposed action will not result in any significant adverse environmental impacts.

Name of Lead Agency	Date
Print or Type Name of Responsible Officer in Lead Agency	Title of Responsible Officer
Signature of Responsible Officer in Lead Agency	Signature of Preparer (if different from Responsible Officer)

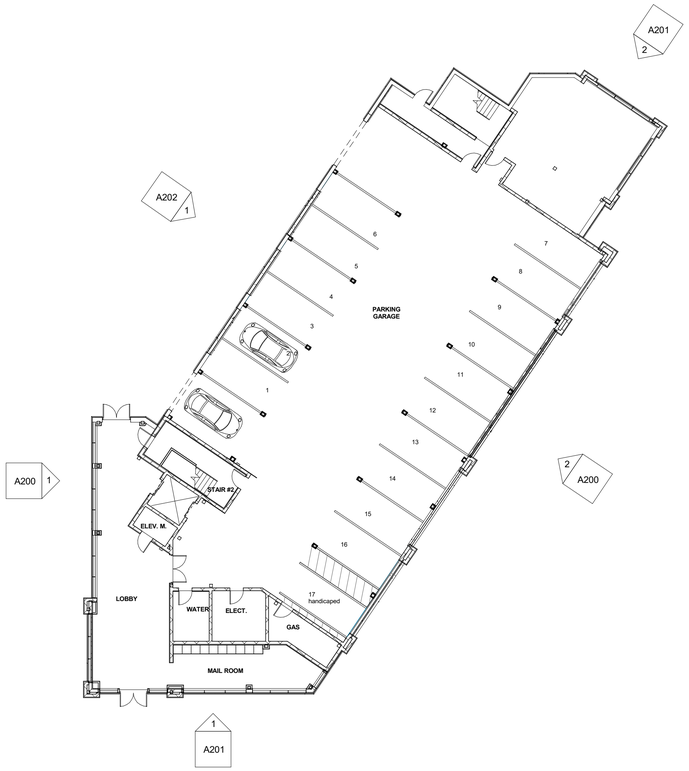

1 Level 1 (GROUND LEVEL PARKING)
1/16" = 1'-0"

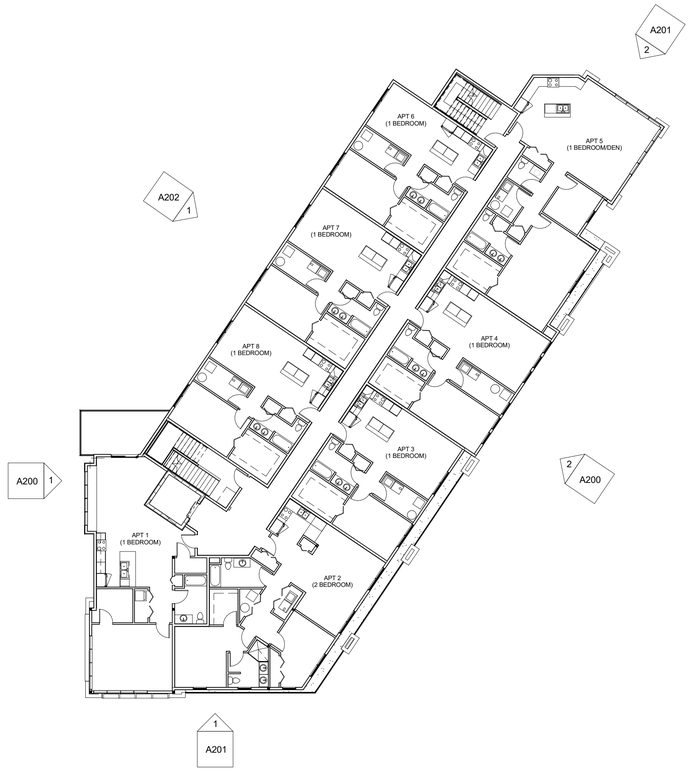

2 LEVEL 2
1/16" = 1'-0"

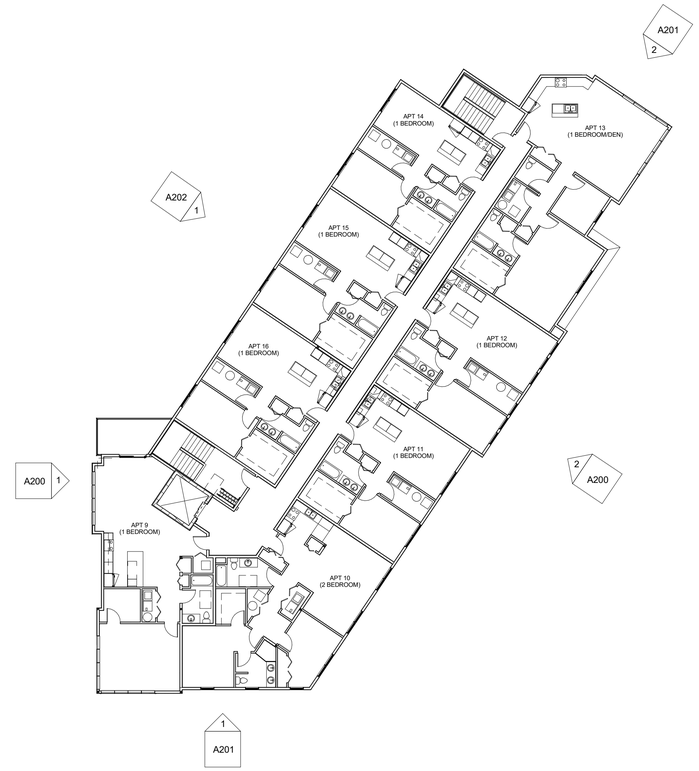

3 LEVEL 3
1/16" = 1'-0"

6/22/16

RE4ORM ARCHITECTURE
323 CLINTON STREET
SCHENECTADY, NY 12305
P:518.399.4174
F:518.399.4105
WWW.RE4ORMARCHITECTURE.COM

246 WEST AVE APARTMENTS

246 WEST AVE
SARATOGA SPRINGS, NY

FLOOR PLANS

A100

CONTRACTOR SHALL VERIFY ALL DIMENSION AT SITE. UNAUTHORIZED ALTERATIONS OR ADDITIONS TO THIS DOCUMENT IS A VIOLATION OF THE NEW YORK STATE EDUCATION LAW.

1 NORTH ELEVATION
1/8" = 1'-0"

2 SOUTH (BIKE PATH) ELEVATION
1/8" = 1'-0"

ELEVATION NOTES	
LABEL	ELEVATION NOTE
E01	"SMARTSIDE" ENGINEERED WOOD LAP SIDING FACTORY FINISHED COLOR TBD
E02	
E03	"SMARTSIDE" ENGINEERED WOOD TRIM FASCIA BOARDS & VENTED SOFFIT FACTORY FINISHED COLOR TBD
E04	"SMARTSIDE" ENGINEERED WOOD TRIM CORNER BOARDS FACTORY FINISHED COLOR TBD
E05	CULTURED STONE SILL
E06	CULTURED STONE VENEER TBD
E07	DECORATIVE HEAVY TIMBER BRACKETS, PAINTED COLOR TBD
E08	"SMARTSIDE" ENGINEERED WOOD SHAKE SIDING FACTORY FINISHED COLOR TBD
E09	COLUMNS WRAPED WITH "SMARTSIDE" ENGINEERED WOOD TRIM BORADS FACTORY FINISHED COLOR TBD
E10	FYPON OR EQUAL DECORATIVE ROUND LOUVER & TRIM
E11	DECORATIVE TRUSS & TRIM PAINTED COLOR TBD
E12	CULTURED STONE VENEER PIER WITH CONCRETE CAP
E13	STANDING SEAM METAL ROOF, COLOR TBD
E14	"MIRATEC" AND "EXTIRA" COMPOSITE BOARDS (PANEL & TRIMS) PAINTED, COLOR TBD
E15	"SMARTSIDE" ENGINEERED WOOD TRIM BOARDS FACTORY FINISHED COLOR TBD
E16	CUPOLA (CONTRACTORS OPTION TO BUILD IN PLACE OR INSTALL PREMENUACTURED UNIT)
E17	CABLE PIPE RAIL WITH PAINTED POSTS COLOR TBD
E18	ROOF CANOPY WITH ASPHALT SHINGLES AND "SMARTSIDE" FASCIA BOARDS & SOFFITS

6/22/16

RE4ORM ARCHITECTURE
323 CLINTON STREET
SCHENECTADY, NY 12305
P:518.399.4174
F:518.399.4105
WWW.RE4ORMARCHITECTURE.COM

246 WEST AVE APARTMENTS

246 WEST AVE
SARATOGA SPRINGS, NY

EXTERIOR ELEVATIONS

A200

CONTRACTOR SHALL VERIFY ALL DIMENSION AT SITE. UNAUTHORIZED ALTERATIONS OR ADDITIONS TO THIS DOCUMENT IS A VIOLATION OF THE NEW YORK STATE EDUCATION LAW.

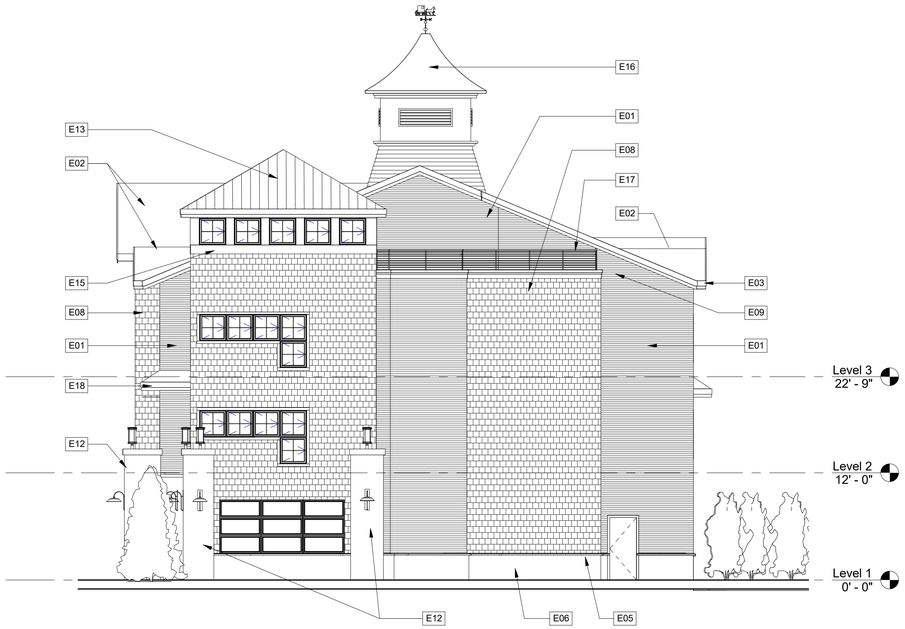

2 EAST ELEVATION
1/8" = 1'-0"

1 WEST ELEVATION
1/8" = 1'-0"

ELEVATION NOTES	
LABEL	ELEVATION NOTE
E01	"SMARTSIDE" ENGINEERED WOOD LAP SIDING FACTORY FINISHED COLOR TBD
E02	
E03	"SMARTSIDE" ENGINEERED WOOD TRIM FASCIA BOARDS & VENTED SOFFIT FACTORY FINISHED COLOR TBD
E04	"SMARTSIDE" ENGINEERED WOOD TRIM CORNER BOARDS FACTORY FINISHED COLOR TBD
E05	CULTURED STONE SILL
E06	CULTURED STONE VENEER TBD
E07	DECORATIVE HEAVY TIMBER BRACKETS, PAINTED COLOR TBD
E08	"SMARTSIDE" ENGINEERED WOOD SHAKE SIDING FACTORY FINISHED COLOR TBD
E09	COLUMNS WRAPED WITH "SMARTSIDE" ENGINEERED WOOD TRIM BORADS FACTORY FINISHED COLOR TBD
E10	FYPON OR EQUAL DECORATIVE ROUND LOUVER & TRIM
E11	DECORATIVE TRUSS & TRIM PAINTED COLOR TBD
E12	CULTURED STONE VENEER PIER WITH CONCRETE CAP
E13	STANDING SEAM METAL ROOF, COLOR TBD
E14	"MIRATEC" AND "EXTIRA" COMPOSITE BOARDS (PANEL & TRIMS) PAINTED, COLOR TBD
E15	"SMARTSIDE" ENGINEERED WOOD TRIM BOARDS FACTORY FINISHED COLOR TBD
E16	CUPOLA (CONTRACTORS OPTION TO BUILD IN PLACE OR INSTALL PREMENUACTURED UNIT)
E17	CABLE PIPE RAIL WITH PAINTED POSTS COLOR TBD
E18	ROOF CANOPY WITH ASPHALT SHINGLES AND "SMARTSIDE" FASCIA BOARDS & SOFFITS

6/22/16

RE4ORM ARCHITECTURE
323 CLINTON STREET
SCHENECTADY, NY 12305
P:518.399.4174
F:518.399.4105
WWW.RE4ORMARCHITECTURE.COM

246 WEST AVE APARTMENTS

246 WEST AVE
SARATOGA SPRINGS, NY

EXTERIOR ELEVATIONS

A201

CONTRACTOR SHALL VERIFY ALL DIMENSION AT SITE. UNAUTHORIZED ALTERATIONS OR ADDITIONS TO THIS DOCUMENT IS A VIOLATION OF THE NEW YORK STATE EDUCATION LAW.

ELEVATION NOTES	
LABEL	ELEVATION NOTE
E01	"SMARTSIDE" ENGINEERED WOOD LAP SIDING FACTORY FINISHED COLOR TBD
E02	
E03	"SMARTSIDE" ENGINEERED WOOD TRIM FASCIA BOARDS & VENTED SOFFIT FACTORY FINISHED COLOR TBD
E04	"SMARTSIDE" ENGINEERED WOOD TRIM CORNER BOARDS FACTORY FINISHED COLOR TBD
E05	CULTURED STONE SILL
E06	CULTURED STONE VENEER TBD
E07	DECORATIVE HEAVY TIMBER BRACKETS, PAINTED COLOR TBD
E08	"SMARTSIDE" ENGINEERED WOOD SHAKE SIDING FACTORY FINISHED COLOR TBD
E09	COLUMNS WRAPED WITH "SMARTSIDE" ENGINEERED WOOD TRIM BORADS FACTORY FINISHED COLOR TBD
E10	FYPON OR EQUAL DECORATIVE ROUND LOUVER & TRIM
E11	DECORATIVE TRUSS & TRIM PAINTED COLOR TBD
E12	CULTURED STONE VENEER PIER WITH CONCRETE CAP
E13	STANDING SEAM METAL ROOF, COLOR TBD
E14	"MIRATEC" AND "EXTIRA" COMPOSITE BOARDS (PANEL & TRIMS) PAINTED, COLOR TBD
E15	"SMARTSIDE" ENGINEERED WOOD TRIM BOARDS FACTORY FINISHED COLOR TBD
E16	CUPOLA (CONTRACTORS OPTION TO BUILD IN PLACE OR INSTALL PREMENUACTURED UNIT)
E17	CABLE PIPE RAIL WITH PAINTED POSTS COLOR TBD
E18	ROOF CANOPY WITH ASPHALT SHINGLES AND "SMARTSIDE" FASCIA BOARDS & SOFFITS

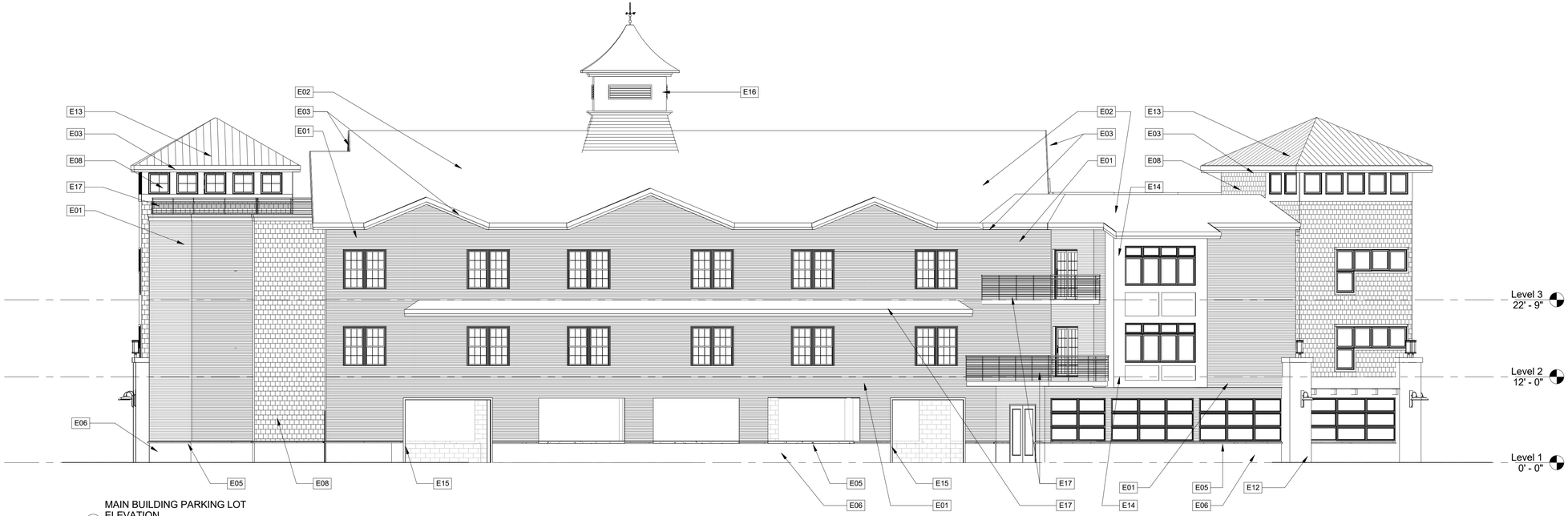

1 MAIN BUILDING PARKING LOT ELEVATION
1/8" = 1'-0"

6/22/16

RE4ORM ARCHITECTURE
323 CLINTON STREET
SCHENECTADY, NY 12305
P:518.399.4174
F:518.399.4105
WWW.RE4ORMARCHITECTURE.COM

246 WEST AVE APARTMENTS

246 WEST AVE
SARATOGA SPRINGS, NY

EXTERIOR ELEVATION

A202

CONTRACTOR SHALL VERIFY ALL DIMENSION AT SITE. UNAUTHORIZED ALTERATIONS OR ADDITIONS TO THIS DOCUMENT IS A VIOLATION OF THE NEW YORK STATE EDUCATION LAW.

246 WEST AVE APARTMENTS

Saratoga, New York

PERSPECTIVE

BE4ORM ARCHITECTURE

246 WEST AVE APARTMENTS

PERSPECTIVE

Saratoga, New York

RE4ORM ARCHITECTURE

246 WEST AVE APARTMENTS

Saratoga, New York

PERSPECTIVE

RE4ORM ARCHITECTURE

The LA GROUP
Landscape Architecture & Engineering P.C.
People. Purpose. Place.

40 Long Alley
Saratoga Springs
NY 12866

[redacted]
www.thelagroup.com

LETTER OF TRANSMITTAL

TO: Saratoga Springs Planning Department
City Hall
Saratoga Springs, NY 12866

DATE: 9/23/16 JOB NO.: 201178

RE: 246 West Avenue Apartments

WE ARE SENDING YOU ☑ Attached ☐ Under separate cover via_____the following items

☐ Shop drawings ☐ Prints ☐ Plans ☐ Samples ☐ Specifications
☐ Copy of letter ☐ Change order ☐ _____

COPIES	DATE	NO.	DESCRIPTION
15			11x17 copies of Revised Rendering
1			CD of PDFs from the submission.
15			24x36 revised elevations

THESE ARE TRANSMITTED as checked below:

☐ For approval ☐ Approved as submitted ☐ Resubmit_____copies for approval
☐ For your records ☐ Approved as noted ☐ Submit_____copies for distribution
☐ As requested ☐ Return for corrections ☐ Return _____corrected prints
■ For review and comments ☐ _____
☐ FOR BIDS DUE _____20_____ ☐ PRINTS RETURNED AFTER LOAN TO US

REMARKS:

cc: SIGNED:_____

If enclosures are not as noted, kindly notify us at once.

1 NORTHEAST ELEVATION - DRC
1/8" = 1'-0"

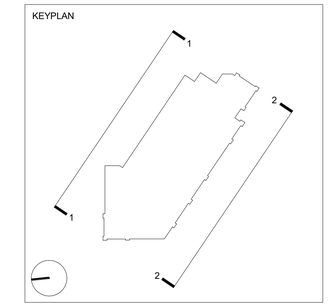

2 SOUTHWEST ELEVATION - DRC
1/8" = 1'-0"

8/17/16

RE4ORM ARCHITECTURE
323 CLINTON STREET
SCHENECTADY, NY 12305
P:518.399.4174
F:518.399.4105
WWW.RE4ORMARCHITECTURE.COM

246 WEST AVE APARTMENTS

246 WEST AVE
SARATOGA SPRINGS, NY

ELEVATIONS

P001

CONTRACTOR SHALL VERIFY ALL DIMENSION AT SITE. UNAUTHORIZED ALTERATIONS OR ADDITIONS TO THIS DOCUMENT IS A VIOLATION OF THE NEW YORK STATE EDUCATION LAW.

1 NORTH ELEVATION - DRC
1/8" = 1'-0"

3 WEST ELEVATION - DRC
1/8" = 1'-0"

2 SOUTHEAST ELEVATION - DRC
1/8" = 1'-0"

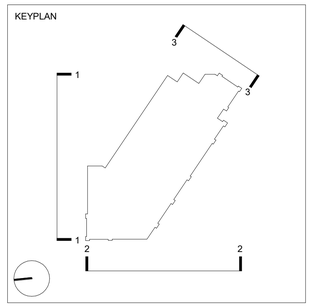

8/17/16

RE4ORM ARCHITECTURE
323 CLINTON STREET
SCHENECTADY, NY 12305
P:518.399.4174
F:518.399.4105
WWW.RE4ORMARCHITECTURE.COM

246 WEST AVE APARTMENTS

246 WEST AVE
SARATOGA SPRINGS, NY

ELEVATIONS

P002

CONTRACTOR SHALL VERIFY ALL DIMENSION AT SITE. UNAUTHORIZED ALTERATIONS OR ADDITIONS TO THIS DOCUMENT IS A VIOLATION OF THE NEW YORK STATE EDUCATION LAW.

246 WEST AVE APARTMENTS

Saratoga, New York

PERSPECTIVE

BE4ORM ARCHITECTURE

246 WEST AVE APARTMENTS

PERSPECTIVE

Saratoga, New York

RE4ORM ARCHITECTURE