CITY OF SARATOGA SPRINGS
PLANNING BOARD
City Hall - 474 Broadway
Saratoga Springs, New York 12866
Tel: 518-587-3550 fax: 518-580-9480
www.saratoga-springs.org

MARK TORPEY, Chair
ROBERT F. BRISTOL, Vice-Chair
TOM L. LEWIS
CLIFFORD VAN WAGNER
HOWARD PINSLEY
JANET CASEY
JAMIN TOTINO
AMY DURLAND, Alternate
RUTH HORTON, Alternate

Planning Board Meeting
City Council Room – 7:00 PM

Agenda

Planning Board Meeting – Thursday, November 10, 2016

City Council Room – 7:00 PM

Applications Under Consideration

A. 15.004.4 Oakridge Phase 2 Subdivision
Meadowbrook Rd , Subdivision extension within the SR-1 District.

Documents:

15.004.4 OAKRIDGEPH2SUBEXT_APP_REDACTED.PDF

B. 16.034 Inclusionary Housing Proposed Zoning Text Amendment
Request for Advisory Opinion from the City Council.

Documents:

16.034 SPAHOUSINGZONINGAMEND_APP_REDACTED.PDF
16.034 SPAHOUSINGZONINGAMEND_COUNTYRESPONSE.PDF
16.034 SPAHOUSINGZONINGAMEND_SARATOGABUILDERSCORR.PDF
16.034 SPAHOUSINGZONINGAMEND_SUSTAINSARATOGACORR.PDF
16.034 SPAHOUSINGZONINGAMEND_SUSTAINSARATOGACORR2.PDF
16.034 SPAHOUSINGZONINGAMEND_SUSTAINSARATOGACORR3.PDF
16.034 SPAHOUSINGZONINGAMEND_PBCORRTOCC10-21-16.PDF

C. 16.038.1 Pet Lodge, SEQRA Coordinated Review Of An Animal Kennel Use
Route 9, SEQRA Coordinated Review in Tourist Related Business (TRB) and Rural Residential (RR) Districts.

Documents:

16.038.1 PETLODGESEQR_ZBAREQ.PDF
16.038.1 PETLODGEOFSARATOGASEQR_ZBAAPP_REDACTED.PDF
16.038.1 PETLODGESEQR_CONCEPT4.PDF
16.038.1 PETLODGESEQR_ARCH1_REDACTED.PDF

D. 16.027 West Avenue Apartments, 246 West Ave
Special use permit for construction of 16 multi-family residential units within the Transect-4 Urban Neighborhood (T-4) District.

Documents:

16.027 WESTAVEAPTSSUP_FULLAPP_REDACTED.PDF

E. 16.028 West Ave Apartments
246 West Ave , Site plan for construction of 16 multi-family residential units within the Transect-4 (T-4) District.

Documents:

16.028 WESTAVEAPTSSITEPLAN_FULLAPP_REDACTED.PDF
16.028 WESTAVEAPTSSITEPLAN_DRCREQADVISOPIN.PDF
16.028 WESTAVEAPTS_LATESTDRCRENDERINGS.PDF
16.028 WESTAVEAPTSITEPLAN_CHAZENSWPPPREVIEW1_REDACTED.PDF

F. 04.029.1 Ice House Site Plan Modification
70 and 72 Putnam Street, proposed site plan modification review in a Transect-6 Urban Core (T-6) District.

Documents:

04.029.1 ICEHOUSEPERMANENTTENT_APP_REDACTED.PDF
04.029.1 ICEHOUSEPERMANENTTENT_EASEMENT.PDF
04.029.1 ICEHOUSEPERMANENTTENT_COUNTYRESPONSE.PDF

G. 16.014.1 21 Park Pl Condos (App 2)
21 Park Pl, 2 lot final residential subdivision within the Urban Residential-4 (UR-4) District.

Documents:

16.014.1 21PARKPLSUBDIVISION_APP_REDACTED.PDF
16.014.1 21PARKPLSUBDIVISION_DEEDRESTRICTDESIGNGUIDE.PDF

Workshop: November 7, 2016 At 5pm In The City Council Room

Salute To Flag

A. Approval Of Minutes: October 27, 2016.

Next Meeting: Tuesday, November 22, 2016 (With Monday, November 21, 2016 Caravan And Workshop)

[FOR OFFICE USE]

(Application #)

(Date received)

CITY OF SARATOGA SPRINGS

PLANNING BOARD

City Hall - 474 Broadway
Saratoga Springs, New York 12866-2296
Tel: 518-587-3550 fax: 518-580-9480
http://www.saratoga-springs.org

(Rev: 12/2015)

APPLICATION FOR: APPROVAL EXTENSIONS – SPECIAL USE PERMIT, SITE PLAN, LAND DISTURBANCE ACTIVITY, SUBDIVISION

Project Name: Oak Ridge Subdivision, Phase 2

Property Address/Location: Meadowbrook Road

Date of original Planning Board approval: November 5, 2015

Current expiration date: November 5, 2016

- ☐ Special Use Permit approval – 18 month extension
- ☐ Site Plan approval – 18 month extension
- ☐ Land Disturbance Activity approval – 18 month extension
- ■ Subdivision approval – 90 day extension

Reason for Extension: Working on completing details of Conservation Easement with Saratoga PLAN.

Since the project was originally approved, are there any significant changes to the site or neighborhood or within the circumstances and findings of fact upon which the original approval was granted? ■ No ☐ Yes If Yes, please describe:

	APPLICANT(S)*	OWNER(S) *(If not applicant)*	ATTORNEY/AGENT
Name	Oak Ridge Development , LLC	Same	The LA Group, PC
Address	23 Dyer Switch Road		40 Long Alley
	Saratoga Springs, NY 12866		Saratoga Springs, NY 12866
Phone	[redacted]		[redacted]
Email			

Identify primary contact person: ☐ Applicant ☐ Owner ■ Agent

* An applicant must be the property owner, lessee, or one with an option to lease or purchase the property in question.

Does any City officer, employee or family member thereof have a financial interest (as defined by General Municipal Law Section 809) in this application? ■ No ☐ Yes If Yes, a statement disclosing the name, residence, nature and extent of this interest must be filed with this application.

Please check the following to affirm information is included with submission:

■ **10 copies and one electronic copy (PDF)** of complete application and any attachments.
■ Application Fee: A check for the total amount below payable to: "Commissioner of Finance" MUST accompany this application.

Special Use Permit approval extension
☐ $250
Site Plan approval extension
☐ Residential - $250
☐ Non-Residential - $500
Land Disturbance Activity approval extension
☐ $250
Subdivision approval extension
■ Residential - $100
☐ Non-Residential - $250

Submission Deadline - Applications must be submitted prior to approval expiration. Check City's website (www.saratoga-springs.org) for application deadlines and meeting dates.

I, the undersigned owner, leasee or purchaser under contract for the property, hereby request approval by the Planning Board for the aforementioned extension of the Site Plan approval.

Applicant Signature: J. S Date: 10/5/16

If applicant is not currently the owner, the owner must also sign.

Owner Signature: _____ Date: _____

Sustainable Saratoga
PO Box 454
Saratoga Springs, NY 12866

[redacted]
www.sustainablesaratoga.org

August 5, 2016

Honorable Joanne Yepsen, Mayor
City of Saratoga Springs
City Hall
474 Broadway
Saratoga Springs, NY 12866

Dear Mayor Yepsen:

RE: SPA-HOUSING ORDINANCE

We are pleased to submit to the City Council the attached zoning amendment that would create "The Saratoga Places for All (SPA) Housing Ordinance".

We request that at the August 16, 2016 City Council meeting, you vote to determine that this zoning amendment has "merit for review" and that it be forward to the City and County Planning Boards for the required advisory opinions.

This is new ordinance is based on the draft ordinance developed in 2006 by the City's Inclusionary Zoning Ordinance Development (IZOD) Committee headed by Monte Franke. This Committee held 30 meetings over 14 months to develop this ordinance. Working off of ordinances from similar sized communities, the Committee uniquely tailored that ordinance to Saratoga Springs. However, in 2007, that ordinance did not make it to the Council table for a vote.

We believe now is the time for the City Council to reconsider this ordinance. It will result in a program that will guarantee more diverse housing opportunities for Saratogians – especially for middle income households. In the last 10 years, housing costs have increased and remain out of reach for many Saratogians. For years there has been much talk of the need for affordable housing – and this ordinance can be part of the effort to make Saratoga Springs more livable for all income groups.

> The ordinance would require developers of housing developments of 10 or more units to set aside up to 20% of the units as affordable in sale or rental to households of modest income. Developers are given up to a 20% density bonus, or right to build more units on the same site, to offset the cost of providing these affordable units. This ordinance takes advantage of market forces and development capacity to produce affordable units that are integrated into housing throughout the community. There are no State or Federal subsidies or actions in this program. There are manageable administrative costs to the City.

Sustainable Saratoga is interested in bringing this ordinance back to City Council because we think it is a good housing program for Saratoga Springs. This ordinance would add an important missing element in our community's overall housing effort. It deserves to have community discussion and consideration.

Our website www.sustainablesaratoga.org contains more information about this ordinance and the housing needs of the community. We will be transmitting this information to you under separate cover.

Sincerely,

Harold J. Moran

Harry Moran
Chair

Attachments
cc: Commissioner John Franck
Commissioner Michele Madigan
Commissioner Chris Mathiesen
Commissioner Anthony Scirocco

CITY OF SARATOGA SPRINGS

OFFICE OF THE MAYOR

City Hall - 474 Broadway
Saratoga Springs, New York 12866-2296
Tel: 518-587-3550 fax: 518-587-1688
http://www.saratoga-springs.org

[FOR OFFICE USE]

_____
(Application #)

_____
(Date received)

PETITION FOR: ZONING AMENDMENT

(Rev: 1/2016)

1. Name of Petitioner: Sustainable Saratoga

2. Type of Amendment (Map or Text):

☐ Map Amendment:

Site Location: _____ Tax Parcel #: _____

Current Zoning: _____ Proposed Zoning: _____

Reason for amendment: _____

_____

_____

■ Text Amendment:

Section to be amended: Article 4.4

Proposed wording of text amendment (attach additional sheets if necessary):

See attached text

_____

Reason for amendment: _____

To achieve more diverse and affordable housing within the city

_____

3. Professional Representing Applicant (if any):

Name: _____ Phone: _____

Address: _____ Email: _____

_____

Identify primary contact person: ☐ Applicant ☐ Owner ☐ Agent

4. Does any City officer, employee or family member thereof have a financial interest (as defined by General Municipal Law Section 809) in this application? YES [ ] NO [✓]. **IF YES**, a statement disclosing the name, residence, nature and extent of this interest must be filed with this application.

Please check the following to affirm information is included with submission.

☐ Environmental Assessment Form - All petitions must include a completed SEQR Short or Long Form. SEQR forms can be completed at http://www.dec.ny.gov/permits/6191.html.

☐ Petition Fee: $700.00 plus $100/acre Total $ Request waiver due to Public Benefit

A check for the total amount payable to: "Commissioner of Finance" must accompany this petition.

☒ Submit **10 copies, and one electronic copy (PDF)** of complete petition and all attachments.

☐ Location map (Map Amendment): Submit (4) large scale 24" x 36", and (10) 11"x17" copies.

All completed petitions are to be submitted to **the Office of the Mayor for consideration.**

I, the undersigned owner or purchaser under contract for the property, hereby request zoning amendment approval by the City Council for the above petition. I agree to meet all requirements under Section 240-10.0 of the Zoning Ordinance for the City of Saratoga Springs.

Furthermore, I hereby authorize members of the City Council, Planning Board and designated City staff to enter the property associated with this petition for purposes of conducting any necessary site inspections relating to this petition.

Applicant Signature: Harold J. Moran Date: August 5, 2016
Name: Harry Moran, Chair Phone: [redacted]
Address: PO Box 454 E-mail: [redacted]
Saratoga Springs, NY 12866

If applicant is not currently the owner, the owner must sign.
Owner Signature: _____ Date: _____
Print Name: _____

Short Environmental Assessment Form
Part 1 - Project Information

Instructions for Completing

Part 1 - Project Information. The applicant or project sponsor is responsible for the completion of Part 1. Responses become part of the application for approval or funding, are subject to public review, and may be subject to further verification. Complete Part 1 based on information currently available. If additional research or investigation would be needed to fully respond to any item, please answer as thoroughly as possible based on current information.

Complete all items in Part 1. You may also provide any additional information which you believe will be needed by or useful to the lead agency; attach additional pages as necessary to supplement any item.

Part 1 - Project and Sponsor Information

Name of Action or Project:
Saratoga Places for All (SPA) Housing Zoning Amendment

Project Location (describe, and attach a location map):
City of Saratoga Springs - Citywide

Brief Description of Proposed Action:
This is a zoning amendment to be adopted by the Saratoga Springs City Council that requires developers of housing developments of 10 or more units to set aside up to 20% of the units as affordable in sale or rental to households of modest income. Developers are given up to a 20% density bonus, or right to build more units, to offset the cost of providing these affordable units. There are no State or Federal subsidies or actions in this program, but there are administrative costs to the City.

Name of Applicant or Sponsor:	Telephone: [redacted]
Sustainable Saratoga	E-Mail: [redacted]

Address:
PO Box 454

City/PO:	State:	Zip Code:
Saratoga Springs	NY	12866

	NO	YES
1. Does the proposed action only involve the legislative adoption of a plan, local law, ordinance, administrative rule, or regulation? If Yes, attach a narrative description of the intent of the proposed action and the environmental resources that may be affected in the municipality and proceed to Part 2. If no, continue to question 2.	☐	☑
2. Does the proposed action require a permit, approval or funding from any other governmental Agency? If Yes, list agency(s) name and permit or approval:	☑	☐

3.a. Total acreage of the site of the proposed action? _____ acres
b. Total acreage to be physically disturbed? _____ acres
c. Total acreage (project site and any contiguous properties) owned or controlled by the applicant or project sponsor? _____acres

4. Check all land uses that occur on, adjoining and near the proposed action.
☐ Urban ☐ Rural (non-agriculture) ☐ Industrial ☐ Commercial ☐ Residential (suburban)
☐ Forest ☐ Agriculture ☐ Aquatic ☐ Other (specify): _____
☐ Parkland

	NO	YES	N/A
5. Is the proposed action,			
a. A permitted use under the zoning regulations?	☐	☐	☑
b. Consistent with the adopted comprehensive plan?	☐	☑	☐

	NO	YES
6. Is the proposed action consistent with the predominant character of the existing built or natural landscape?	☐	☐
7. Is the site of the proposed action located in, or does it adjoin, a state listed Critical Environmental Area? If Yes, identify: _____	☐	☐
8. a. Will the proposed action result in a substantial increase in traffic above present levels?	☑	☐
b. Are public transportation service(s) available at or near the site of the proposed action?	☐	☐
c. Are any pedestrian accommodations or bicycle routes available on or near site of the proposed action?	☐	☐
9. Does the proposed action meet or exceed the state energy code requirements? If the proposed action will exceed requirements, describe design features and technologies: _____	☐	☐
10. Will the proposed action connect to an existing public/private water supply? If No, describe method for providing potable water: _____	☐	☐
11. Will the proposed action connect to existing wastewater utilities? If No, describe method for providing wastewater treatment: _____	☐	☐
12. a. Does the site contain a structure that is listed on either the State or National Register of Historic Places?	☐	☐
b. Is the proposed action located in an archeological sensitive area?	☐	☐
13. a. Does any portion of the site of the proposed action, or lands adjoining the proposed action, contain wetlands or other waterbodies regulated by a federal, state or local agency?	☐	☐
b. Would the proposed action physically alter, or encroach into, any existing wetland or waterbody? If Yes, identify the wetland or waterbody and extent of alterations in square feet or acres: _____	☐	☐

14. Identify the typical habitat types that occur on, or are likely to be found on the project site. Check all that apply:

☐ Shoreline ☐ Forest ☐ Agricultural/grasslands ☐ Early mid-successional

☐ Wetland ☐ Urban ☐ Suburban

	NO	YES
15. Does the site of the proposed action contain any species of animal, or associated habitats, listed by the State or Federal government as threatened or endangered?	☐	☐
16. Is the project site located in the 100 year flood plain?	☐	☐
17. Will the proposed action create storm water discharge, either from point or non-point sources? If Yes, a. Will storm water discharges flow to adjacent properties? ☐ NO ☐ YES	☐	☐
b. Will storm water discharges be directed to established conveyance systems (runoff and storm drains)? If Yes, briefly describe: ☐ NO ☐ YES _____		

	NO	YES
18. Does the proposed action include construction or other activities that result in the impoundment of water or other liquids (e.g. retention pond, waste lagoon, dam)? If Yes, explain purpose and size: _____	☐	☐
19. Has the site of the proposed action or an adjoining property been the location of an active or closed solid waste management facility? If Yes, describe: _____	☐	☐
20. Has the site of the proposed action or an adjoining property been the subject of remediation (ongoing or completed) for hazardous waste? If Yes, describe: _____	☐	☐

I AFFIRM THAT THE INFORMATION PROVIDED ABOVE IS TRUE AND ACCURATE TO THE BEST OF MY KNOWLEDGE

Applicant/sponsor name: Harry Moran, Sustainable Saratoga Chair Date: August 5, 2016

Signature: Harold J. Moran

PRINT FORM

Proposed SPA Housing Zoning Ordinance (August 2016)

This proposed zoning amendment is nearly identical to the Inclusionary Zoning Ordinance amendment proposed in 2006

Proposed Amendments to the Zoning Ordinance of the City of Saratoga Springs

ARTICLE 4.4 – INCLUSIONARY ZONING

240-4.4.1 LEGISLATIVE FINDINGS

A. The City Council of the City of Saratoga Springs finds that:

(1) Over the last decade, rising housing prices and rents have made it increasingly difficult for long-term City residents and workers to afford to live in the City, and may ultimately displace long-term residents who contribute so much to the City. Lack of access to decent affordable housing has a direct negative impact upon the health, safety and welfare of the residents of the City.

(2) Economic diversity is essential to the health of Saratoga Springs. A sound local economy requires a stable workforce at all wage levels. City businesses and employers are finding it more difficult to attract and retain employees, especially lower wage workers that have to live further from the City and endure longer commutes to work. This has the potential to harm the economic vitality of the City.

(3) Developers are in a unique position to produce needed units for working households at a reduced cost, provided the City grants them the ability to provide additional units over and above those currently permitted by zoning. Inclusionary zoning is a market-based response that achieves affordable housing by reducing or eliminating land cost through increased density.

(4) Inclusionary zoning can be enacted without discouraging development or negatively affecting community character. Inclusionary zoning approaches have been used successfully in communities nationwide to provide worker housing. Inclusionary housing policies can ensure an equitable distribution of affordable housing opportunities throughout all neighborhoods and zones of the City without excessive burden to any single site or area.

B. The City has reviewed inclusionary zoning ordinances and inclusionary housing studies from around the country and adapted provisions that are appropriate to the needs and opportunities that exist in this City, has consulted with the development community and other stakeholders, and has designed an approach that is sensitive to the interests and concerns of this community.

240-4.4.2 PURPOSE

Now, therefore, the City Council of the City of Saratoga Springs, in accordance with the powers and authority vested in it by General City Law section 20 (24), 20 (25), and 81-d, hereby enacts this article in the best interests of the people of Saratoga Springs. The purposes of this article are to:

(1) Utilize market forces to produce homebuyer and rental housing units that are affordable to working households in the City through reasonable density bonuses and affordable unit pricing without undue financial burden.

(2) Encourage the development of housing affordable to a broad range of households with varying income levels, and mitigate the market forces excluding housing that meets the needs of all economic groups within the City.

(3) Promote the City's goal of increasing the workforce housing stock in a uniform and predictable manner and in proportion to the overall increase in new housing units.

(4) Ensure the availability of workforce housing throughout the community and equitably share the responsibility for workforce housing across all neighborhoods.

(5) Mitigate environmental and other impacts that accompany new residential development by reducing traffic, transit and related air quality impacts, promoting a housing balance and reducing the demands placed on transportation infrastructure in the region.

(6) Prevent overcrowding and deterioration of the limited supply of workforce housing and, thereby, promote public health, safety and general welfare.

(7) Provide for efficient administration in the approval, implementation and monitoring of projects.

240-4.4.3 DEFINITIONS

As used in this article, the following terms shall have the following meanings:

AFFORDABLE RENT: Monthly rent that does not exceed one-twelfth of thirty-five percent (35%) of the maximum annual income for a household earning fifty percent (50%) of City Median Income (Low Income) or eighty percent (80%) of City Median Income (Moderate Income).

AFFORDABLE OWNERSHIP COST**:** A sales price that results in a monthly housing cost (including mortgage, insurance, property taxes and home association costs, if any) that does not exceed one-twelfth of thirty-five percent (35%) of the maximum annual income for a household earning eighty percent (80%) of City Median Income (Moderate Income) or one hundred percent (100%) of City Median Income (Middle Income).

CITY MEDIAN INCOME: The median household income as established by HUD for the Albany-Schenectady-Troy Metropolitan Statistical Area, adjusted by the City Office of Planning and Economic Development for the percentage difference between the City Median Income and the MSA Median Income based on the decennial Census, or other method established by the Office of Planning and Economic Development for determining the Median Income of the City on an annual basis.

CITY**:** The City of Saratoga Springs.

COVERED PROJECT: Any project or projects that meet(s) the criteria of article 240-IIA.4A "Covered Projects."

DEVELOPER**:** Any person, firm, partnership, association, joint venture, corporation, or any entity or combination of entities with an identity of at least 10% proprietary interest, which seeks City approvals for all or part of a Covered Project or Projects.

HIGH COST PROJECT**:** A residential development in which the addition of the Inclusionary Units will result in higher incremental construction costs directly allocable to the Inclusionary Units. These additional costs may include, but are not limited to, addition of stories, extension of elevators, additional structural support, additional garaged parking spaces, upgraded exterior materials including masonry and stone veneer, required handicapped accessibility modifications, the substantial rehabilitation of unique historic structures or features, or unusual changes or additional requirements imposed by regulatory authorities.

HOUSEHOLD**:** One person living alone or two or more persons sharing residency whose income is considered for housing payments.

HUD: The U.S. Department of Housing and Urban Development.

INCLUSIONARY HOUSING PLAN: A plan submitted by a Developer to provide compliance with this article.

INCLUSIONARY HOUSING AGREEMENT**:** A written agreement between a Developer and the City, as provided herein, to be recorded and that would run with the land.

INCLUSIONARY UNIT: A dwelling unit that must be offered at Affordable Rent or available at an Affordable Ownership Cost to Income Eligible Households, and is regulated with regard to selling price or rent level, marketing and initial occupancy, and continued requirements pertaining to resale or rents and occupancy for the minimum compliance period, as provided herein.

INCOME ELIGIBLE HOUSEHOLD: For an Inclusionary Unit for rent, a Household earning less than fifty percent (50%) of City Median Income (Low Income) or eighty percent (80%) of City Median Income (Moderate Income), as provided in article 240-IIA.6. For an Inclusionary Unit for sale, a Household earning less than eighty percent (80%) of City Median Income (Moderate Income) or one hundred percent (100%) of City Median Income (Middle Income), as provided in article 240-IIA.6.

MARKET UNIT: A dwelling unit in a Covered Project that is not an Inclusionary Unit.
SEQR: New York State Environmental Quality Review.

SUBSTANTIAL REHABILITATION: A cost of rehabilitation that exceeds 50% of the market value of the building based on the quotient of the structure's current assessed value as indicated in the City's Assessment Records divided by the city's Equalization Rate.

240-4.4.4 COVERED PROJECTS AND EXEMPT PROJECTS

A. Covered Projects

Except as otherwise provided herein, this article shall apply to all building permit requests pertaining to the following projects:

(1) Any project of ten (10) or more new additional residential dwelling units that are produced through construction, substantial rehabilitation of existing structures, or adaptive reuse or conversion of a nonresidential use to a residential use.

(2) Multiple developments or projects by a Developer occurring on contiguous parcels or in substantial proximity to one another shall be considered in toto and shall be Covered Projects.

(3) Any project of less than 10 new residential units that, at the sole discretion of the Planning Board, may be permitted for voluntary inclusion as a Covered Project under this Article of the Zoning Ordinance. If approved, all requirements for Covered Projects shall apply.

B. Exempt Projects

This article shall not apply to all building permit requests pertaining to the following projects:

(1) Mobile homes.

(2) Any project that is developed by an educational institution for the exclusive residential use and occupancy by that institution's students.

(3) Any project that produces affordable units equal to, or in excess of, the requirements contained in this article.

(4) Any project for which building permit applications were properly filed before the date of enactment of this Article.

(5) Any project for which a final Planning Board decision of approval (final PUD site plan, final site plan, or final subdivision approval) was issued before the date of enactment of this Article.

C. Temporary Suspension of Inclusionary Requirements for Covered Projects

In the event that the City's Office of Planning and Economic Development determines that the Waiting List is inadequate to support the development of additional Inclusionary Units, the Planning Board may suspend the Inclusionary Unit requirements for a specific Covered Project. In that event, no Density Bonus under 240-4.4.5 is provided.

240-4.4.5 DENSITY BONUS

To assist developers in meeting the requirements of this article, all Covered Projects shall be entitled to a density increase of no more than 20% of the number of units that the Covered Project is allowed under existing zoning or a lesser base number of units as originally proposed by the developer, as permitted subsequent to SEQR analysis or as may be established by the Planning Board. When determination of the number of units for a density bonus results in a fractional unit, any fraction of .5 or over shall be one additional unit, and any fraction below .5 will be rounded down. Notwithstanding the above, no provisions herein shall be construed as limiting the discretion of the Planning Board to conduct reviews of Covered Projects and to issue any decisions within the scope of its statutory authority.

240-4.4.6 REQUIREMENTS OF INCLUSIONARY UNITS

All Covered Projects shall meet the requirements for Inclusionary Units as specified in this section. The percentage of Inclusionary Units shall be calculated with a base number, or as may be established by the Planning Board, that does not include the bonus units added to the Covered Project.

A. Inclusionary Units – Rental

For Covered Projects where units are offered for rent, the number of Inclusionary Units shall be designated as follows. When determining the number of Inclusionary Units, any fraction of .5 or over shall be one additional unit, while any fraction below .5 will be rounded down.

If Inclusionary Unit rent is affordable to:	Required number of Inclusionary Units as a percentage of the Market Units
Low Income Households (up to 50% of area median)	10%
Moderate Income Households (50% - 80% of area median)	20%

(1) Affordable Rents. Maximum Affordable Rents for Inclusionary Units will be calculated as follows: one-twelfth of thirty-five percent (35%) of the maximum annual income for a household at the applicable income limit – either fifty percent (50%) of City Median Income (Low Income) or eighty percent (80%) of City Median Income (Moderate Income).

(2) In calculating the Affordable Rent of Inclusionary Units, the applicable income shall be based on the following relationship between unit size and Household size:

Unit Size	Household (HH) Size for Applicable Income
Efficiency units	1 person HH
One-bedroom units	1.5 person HH
Two-bedroom units	3 person HH
Three-bedroom units	4.5 person HH
Four-bedroom units	6 person HH

(3) The calculations of the initial rents for the Inclusionary Units shall be made by the City Office of Planning and Economic Development and shall be contained within the Inclusionary Housing Agreement for the Covered Project. The Office of Planning and Economic Development may revise these prices in the event of documented exceptional circumstances.

(4) In the event that a Covered Project receives additional subsidies from any public source to assist the Inclusionary Units, the value of such subsidies shall be used to reduce the rents and/or income limits for the Income Eligible Households to be served by the Units, as determined by the City Office of Planning and Economic Development.

B. Inclusionary Units – For Sale

For Covered Projects where units are offered for sale via the conveyance of a deed or share for individual units, Inclusionary Units shall be designated in accordance with the following table. When determining the number of Inclusionary Units, any fraction of .5 or above shall be one additional unit, while any fraction below .5 will be rounded down.

If Inclusionary Unit sale is affordable to:	Required number of Inclusionary Units as a percentage of the Market Units
Moderate Income Households (up to 80% of area median)	15%
Middle Income Households (80% - 100% of area median)	20%

(1) Sales Price. Sales prices will be based on calculation of the Affordable Ownership Cost, which means a sales price that results in a monthly housing cost (including mortgage principal and interest, insurance, property taxes and home association costs, if any) that does not exceed one-twelfth of thirty-five percent (35%) of the maximum annual income for the applicable income limit – eighty percent (80%) of City Median Income (Moderate Income) or one hundred percent (100%) of City Median Income (Middle Income).

(2) With respect to Inclusionary Units offered for sale, the Affordable Ownership Cost will be calculated on the basis of:

(a) A down payment of no more than five percent (5%) of the purchase price; and

(b) An available fixed-rate thirty-year mortgage, using Fannie Mae's current interest rate, for the balance of the purchase price. (If the Developer can guarantee the availability of a fixed-rate thirty-year mortgage at a lower rate from the State of New York Mortgage Agency or other public agency for all of the Inclusionary Units in the Covered Project, a lower interest rate as provided by that agency may be used in calculating Affordable Ownership Cost.)

(3) The calculations of the initial sales prices for the Inclusionary Units shall be made by the City Office of Planning and Economic Development and shall be contained within the Inclusionary Housing Agreement for the Covered Project. The Office of Planning and Economic Development may revise these prices prior to initial occupancy in the event of documented exceptional circumstances.

(4) In the event that a Covered Project receives additional subsidies from any source to assist the Inclusionary Units, the value of such subsidies shall be used to reduce the sales prices and/or income limits for the Income Eligible Households to be served by the Units, as determined by the City Office of Planning and Economic Development.

(5) In the event that an individual buyer is able to provide a higher down payment or obtain a higher mortgage loan based on fixed-rate financing at a lower rate than provided in paragraph (2)(b) above, the additional Buyer Funds may be used by the buyer to purchase additional improvements to the Inclusionary Unit. Upon approval of the Office of Planning and Economic Development, said additional improvements can be added to the base price for purposes of determining resale under Article 240-4.4.9B.

C. General Requirements for Covered Projects – Rental and For Sale Units

(1) Distribution
In order to assure an adequate distribution of Inclusionary Units by household size, the bedroom mix of Inclusionary Units in any Covered Project shall reflect the same ratio as the bedroom mix of the Market Units of the Project, unless waived by the Planning Board for good cause or requested by the Office of Planning and Economic Development based on the waiting list.

(2) Phasing
Inclusionary Units shall be made available for occupancy on approximately the same schedule as, or sooner than, a Covered Project's market units, except that certificates of occupancy for the last ten percent (10%) of the Market Units shall be withheld until certificates of occupancy have been issued for all of the Inclusionary Units. A schedule setting forth the phasing of the total number of units in a Covered Project, along with a schedule setting forth the phasing of the required Inclusionary Units, shall be established prior to the issuance of a building permit for any Covered Project.

(3) Comparability
Inclusionary Units may differ from the Market-Rate Units in a Covered Project with regard to interior amenities and gross floor area provided that:

(a) These differences, excluding differences related to unit size differentials, are not apparent in the general exterior appearance of the project's units and there is compliance with all exterior site requirements of the City.

(b) These differences do not include the reduction of insulation, windows, heating systems, and other improvements related to the energy efficiency of the Inclusionary Units.

(c) The gross floor area of the Inclusionary Units is not less than the following minimum requirements, unless waived by the Planning Board for good cause: one bedroom – 700 square feet, plus 150 square feet for each additional bedroom.

D. Inclusionary Housing Agreement

All Covered Projects are required to have an Inclusionary Housing Agreement approved as part of the final PUD site plan, final site plan or final subdivision approval by the Planning Board.

E. Restrictive Covenants

All Inclusionary Units produced shall have restrictive covenants, recorded and filed to run with the land, to ensure compliance with the occupancy, sale, rent and other requirements of this article, and provide for legal remedies for the City to enforce this article. These restrictive covenants shall be contained in the Inclusionary Housing Agreement approved by the City Planning Board.

240-4.4.7 RELIEF

The section identifies methods of relief from existing regulation to accommodate the requirements of this Article.

A. In order to accommodate the additional residential units required by this Article, the Planning Board may grant relief from the requirements set forth in the table below to the extent necessary so that the additional units are appropriately incorporated into the overall site plan. In doing so, the Planning Board must find that the resulting development is consistent with the general area and does not negatively impact the character of the surrounding neighborhoods. The intent is to provide a sufficient degree of specificity in site design and layout without unduly restricting creative and diverse solutions.

Zoning District	Requirements that may be relieved
T-6 Urban Core	Height: standard maximum height may be exceeded up to one story. The additional story shall contain no more than the number of additional units granted by the density bonus and these units shall be set back at least 10 feet from the facades of the story below
T-4 Urban Neighborhood T-5 Neighborhood Center	Height: as defined for the T-6 Urban Core district Build-to line, side and rear setbacks Parking requirements
Single-family Residential Districts (RR, SR-1, SR-2, UR-1, UR-2)	Minimum lot size, mean width, maximum lot coverage Minimum yard dimensions Minimum floor area: units shall be a minimum of 700 square feet for 1 bedroom plus 150 square feet for each additional bedroom Number of principal buildings & residences: to permit carriage house/accessory apartments and duplexes, and only to the extent to accommodate the additional units

Single- and two-family Residential Districts (UR-3, UR-4, UR-4A, UR-7, NCD-1,2,3)	Minimum lot size, mean width, maximum lot coverage, minimum permeability Minimum yard dimensions Minimum floor area: units shall be a minimum of 700 square feet for a 1 bedroom plus 150 square feet for each additional bedroom Number of principal buildings & residences – to permit carriage house/accessory apartments and duplexes, and only to the extent to accommodate the additional units
Multi-family Residential Districts (UR-5)	Minimum lot size, mean width, maximum lot coverage, minimum permeability Minimum yard dimensions Minimum floor area – units shall be a minimum of 700 square feet for 1 bedroom plus 150 square feet for each additional bedroom

B. Reduction in Inclusionary Units
In the event the Planning Board cannot approve a full density bonus, as prescribed in Section 240-4.4.5 “Density Bonus”, the number of required Inclusionary Units shall be reduced in proportion to the ratio of proposed Inclusionary Units to the proposed density bonus (i.e., if the developer has proposed that all density bonus units be Inclusionary Units, then 100% (20%/20%) of the reduction shall be Inclusionary Units; if the developer has proposed the 15% Inclusionary Unit option, then 75% (15%/20%) of the reduction shall be Inclusionary Units; if the developer has proposed the 10% Inclusionary Unit option, then 50% of the reduction in units shall be Inclusionary Units.)

C. High Cost Project
In the event a Developer can establish by clear and convincing financial data to the Planning Board that the Covered Project constitutes a High Cost Project, the Planning Board, in consultation with the City Office of Planning and Economic Development, may permit the Developer to offer the required Inclusionary Units to households at up to 20% above the applicable income limits and prices in 240-4.4.6.

D. Relief from this Ordinance
If the developer requests full relief from this Article to eliminate the provision of all Inclusionary Units, relief shall be sought from the Zoning Board of Appeals through a variance.

240-4.4.8 SALE/LEASING OF INCLUSIONARY UNITS

Any Developer of a Covered Project shall adhere to the following provisions and to the provisions of the Inclusionary Housing Agreement with respect to the initial offering of Inclusionary Units for sale or rent.

A. Ineligible Households. No Inclusionary Units may be rented or sold to any person who will not reside in that unit year-round, or to any person who is

claimed as a dependent on another person's federal or state tax return.

B. Occupant Qualification. Occupancy of Inclusionary Units shall be by households qualified by the City.

C. Notice of Availability. The Developer shall notify the City Office of Planning and Economic Development of the prospective availability of any Inclusionary Units at least 180 days before such Units shall be available for lease or sale in a Covered Project.

D. Waiting List. Upon such notice, the Office of Planning and Economic Development shall provide to the Developer a list of qualified Income Eligible Households based upon the City's waiting list for Inclusionary Unit housing. Referrals will be made by the City based on priority to Income Eligible Households who are, at the time that the units are offered for sale or lease, residing or working, first, in the City and, second, in the County of Saratoga. The Developer will consider applicants in the order specified in the list, to rent or sell the Inclusionary Units, and may take into account any standard and lawful screening of applicants uniformly applied to all applicants for Inclusionary and market units. The developer shall comply with all fair housing laws. Referrals from the list will respect any conditions of occupancy, including elderly and/or handicapped occupancy, legally imposed by public financing.

E. Release from Inclusionary Unit Restrictions. If, after the initial 180 days following the Notice of Availability, a developer is still unable to secure a qualified, Income Eligible Household for an Inclusionary Unit from the City's Waiting List, the City Office of Planning and Economic Development shall approve the release of the Inclusionary Unit restrictions and that unit may be sold or leased as a Market Unit. The excess proceeds of this sale, over and above the approved Inclusionary Unit sale price plus legitimate and reasonable carrying and sales costs of the developer, shall be repaid to the City and used to support the purposes of this Inclusionary Zoning Article.

F. Reasonable Accommodations and Modifications. The City will operate the program and maintain the waiting lists in compliance with the Americans With Disabilities Act to ensure access to persons with disabilities.

(1) For homebuyer units, the City will notify the developer of referral of a household that includes a person with disabilities. The developer shall make reasonable accommodations in working with that household, and install reasonable modifications as required by the household to occupy the unit. Said reasonable modifications shall be at the expense of the household, and the sales price of the Inclusionary Unit may be adjusted to reflect the reasonable modifications.

(2) For rental units, when the City determines that the likely applicants for Inclusionary Units will include households with disabilities, the City will designate handicapped accessible units in the development to be reserved as Inclusionary Units as part of the Inclusionary Housing

Agreement. The developer will make reasonable accommodations to provide housing to the household containing persons with disabilities.

240-4.4.9 CONTINUED AFFORDABILITY REQUIREMENTS

A. Rental Projects

All rental Covered Projects shall comply with the following provisions, which shall be contained in an Inclusionary Housing Agreement to ensure continued affordability of Inclusionary Units.

(1) Minimum Affordability Period. All Inclusionary Units shall remain affordable for a period of no less than thirty (30) years commencing from the date of initial occupancy of the units.

(2) Rent Increases. Increases in the annual rent for Inclusionary Units during the minimum affordability period shall be limited to the percentage increase in the Consumer Price Index for the Albany-Schenectady-Troy Metropolitan Statistical Area. Increases above this percentage require the approval in advance and in writing from the City Office of Planning and Economic Development, which shall approve increases based on documented hardship or other exceptional conditions.

(3) Rental Report. Owners of rental Inclusionary Units shall provide such information annually to the City, as determined by the City Office of Planning and Economic Development and the Inclusionary Housing Agreement, to ensure compliance with continuing occupancy and rent restrictions.

(4) Maintenance of Units. Owners shall comply with all local codes and standards with respect to Inclusionary Units, and provide maintenance services to the Inclusionary Units in the same manner provided all units in the Project.

(5) Lease and Sublet Restrictions. During the affordability period, the owner or occupant may not sublet an Inclusionary Unit to a Household other than an Income Eligible Household, or at a rent in excess of the Affordable Rent.

(6) Sale of Project. If the Covered Project is sold during the Minimum Affordability Period, the use restrictions shall run with the land, and the new buyer will meet all restrictions of the Inclusionary Housing Agreement for the remainder of the period. The City shall charge the seller a fee to cover the costs of approving and recording the transfer.

B. Homebuyer Projects

All homebuyer Inclusionary Units shall comply with resale restrictions, which shall be contained in an Inclusionary Housing Agreement with the Developer and legally recorded with each sale. Transfer to an original co-owner does not

constitute a resale for this purpose, but the transfer is subject to all restrictions of the original covenants, and any subsequent resale is subject to these provisions.

(1) Shared Interest in Proceeds of Sale. At the time of the initial sale of the Inclusionary Unit, the City will determine the Buyer's Interest and the City's Interest based upon current Market Value determined by appraisal as if the property was unrestricted. The Buyer's Interest will be the percentage that the Buyer's Funds, including down payment and mortgage(s), constitute of the current full market value at time of initial sale. Buyer's Funds can include additional improvements as defined in Article 240-4.4.6B(5), but do not include any mortgages, subsidies or buy downs provided by the City or other public sources.

The City's Interest will be the remainder interest; that is, the Subsidy Amount (Market Value minus Buyer's Funds) divided by the Market Value at time of initial sale.

(2) Resale Price. The resale price shall be the Buyer's Interest multiplied by the current Market Value as an unrestricted unit at time of resale. The Office of Planning and Economic Development shall determine the market value of the unit by appraisal, the cost of which is to be borne by the seller.

(3) Notice of Intent to Sell. At any time the original Buyer wishes to offer an Inclusionary Unit for resale, the Buyer (now the Seller) must notify the City Office of Planning and Economic Development. The City (or its designee) shall provide one or more eligible buyers from the list of eligible buyers within thirty (30) days from notification. If the City declines or fails to provide an eligible buyer after 120 days from the notice to sell, the City Office of Planning and Economic Development may release the Inclusionary Unit restrictions on this unit, and the unit may be sold as an unrestricted unit, with the City recapturing its portion of the gross proceeds based on the City's Interest in Article 240-4.49B(1) above.

(4) Transaction Fee. The City shall charge a fee to cover the costs of resale charged to the seller out of net proceeds.

240-4.4.10 ADMINISTRATION

A. Inclusionary Housing Plan
The developer will submit a proposed Inclusionary Housing Plan to the City Office of Planning and Economic Development in advance of Planning Board review. The Office will review the proposed plan for consistency with this Article, and provide comments to the developer and to the Planning Board.

B. Inclusionary Housing Agreement
All Covered Projects are required to have an Inclusionary Housing Agreement approved as part of the final PUD site plan, site plan or subdivision approval by

the Planning Board. The City Office of Planning and Economic Development will prepare the Inclusionary Housing Agreement. Notwithstanding any other provision of this article, no special use permit, site plan, change of use, subdivision approval, building permit or occupancy permit shall be granted for any dwelling unit in a Covered Project unless an Inclusionary Housing Agreement has been approved by the Planning Board.

C. Expedited Processing and Waiver of Fees

(1) Expedited Approvals and Permit Review. Structures that provide the required Inclusionary Units shall receive priority for building permit review and development approvals, and multiple IZ units with identical plans will receive single plan review.

(2) Waiver of Fees. All municipal fees associated with the development and construction of new residential units shall be waived only as they apply to the required Inclusionary Units.

D. Oversight and Enforcement

The City Office of Planning and Economic Development will monitor Covered Projects during implementation, review occupancy reports submitted by developers, and approve the transfer or re-occupancy of Inclusionary Units.

(1) Post-Approval Administrative Actions. In the event of unforeseen and unavoidable changes in costs, the Office of Planning and Economic Development shall have the authority to adjust pricing and eligible income levels, but changes in the number of Inclusionary Units in the Inclusionary Housing Agreement will require Planning Board approval.

(2) Certificate of Occupancy. No final certificate of occupancy shall be issued for a Covered Project unless all Inclusionary Units within the Covered Project are eligible for a certificate of occupancy, except that, with respect to Covered Projects to be constructed in phases, certificates of occupancy may be issued on a phased basis consistent with the provisions of this Article.

(3) Enforcement. Violations of this article shall be punishable as provided by Article 240-9.2. In addition, any certificates of occupancy for Market Units in a Covered Project found to be in violation of this article may be revoked upon a finding of substantial non-compliance hereunder.

E. Annual Report and Evaluation

The City Office of Planning and Economic Development shall monitor activity under this article and shall provide an annual report on activities and costs to the City Council. In addition, the Council shall cause this Article to be evaluated every three years, or in conjunction with the Comprehensive Plan review. In accordance with the City Charter, the Mayor shall have the authority to appoint a committee that includes representation of the inclusionary zoning program administrative staff, the Planning Board, the development industry and affordable

housing experts to monitor the initial implementation of the ordinance and make recommendations.

EXEMPTION OF FEES FOR INCLUSIONARY UNITS:

In the annual resolution of the City Council, there shall be no application fees for the inclusionary units in a site plan or subdivision application, There shall be no cash-in-lieu of recreation land fee for the inclusionary units.

August 2016

Sustainable Saratoga

A proposal for Saratoga Springs

The Saratoga Places for All (SPA) Housing Ordinance

A Program to Obtain More Diverse Middle-Income Housing

Sustainable Saratoga believes it is time for the City of Saratoga Springs to enact legislation that will guarantee more diverse housing opportunities – especially for middle income households. The increasing cost of land and housing has been squeezing lower and middle income residents out of the city. A diversity of housing types is needed to accommodate a diverse population and thereby secure a key element in the long-term sustainability of the community.

More than 20 local agencies are providing housing opportunities for low income households and special needs populations. But not as much is being done for the middle income groups – the workforce of the community. Over the years the City has promoted zoning incentives to encourage builders to voluntarily create a more diverse housing stock. But because developers have chosen not to participate, the effort has been largely unsuccessful. Meanwhile, home purchase prices and rental costs are higher than ever. According to the US Census 2009-2013 American Community Survey report, the median cost to buy a home in the city was $297,900, while the median gross rent (including utilities) was $953.

The US Department of Housing and Urban Development (HUD) defines "affordable housing" as "housing for which the occupant(s) is/are paying no more than 30 percent of his or her income for gross housing costs, including utilities." According to the US Census's 2009-2013 American Community Survey, in Saratoga Springs 3,738 households, comprising 33.04 percent of the total, spent more than 30 percent of their income on housing costs. The total included 24.19 percent of all homeowners, or 1,556 households, and 44.71 percent of all renters, or 2,182 households.

Sustainable Saratoga proposes that the City Council adopt an inclusionary zoning ordinance as an effective means of addressing the need to provide housing that is affordable, especially for middle-income residents. We are recommending essentially the same ordinance that was prepared in 2006 after a year-long study. The ordinance has been tailored specifically to the city's needs, reflecting our housing and development history.

The SPA Housing Ordinance – Saratoga's Inclusionary Zoning Ordinance

Inclusionary zoning (IZ) is a type of municipal ordinance that requires new housing projects to include a prescribed proportion of units that are affordable by people with lower to middle incomes. The developer is usually rewarded with a density bonus to compensate for providing the affordable housing. The objective of IZ is to promote income-integrated communities by ensuring that new housing projects, whether involving new construction or renovation, will contain housing for individuals and families having a mix of income levels. This type of

ordinance is called inclusionary zoning because it is the opposite of exclusionary zoning—the practice of excluding low-cost housing from a municipality through the zoning code.

Communities with Similar Ordinances

There are over 400 communities in 17 states that have some kind of inclusionary zoning housing ordinance. They range in population from 15,000 to 8,000,000. IZ ordinances work best in affluent resort communities and those with growing populations. Each community's ordinance is different. There is substantial variation in density bonuses, required percentage of affordable units, eligibility of occupants, and how long affordable units must remain affordable.

The 2006 Draft IZ Ordinance for Saratoga Springs

In 2005 the Saratoga Springs City Council formed an Inclusionary Zoning Ordinance Development (IZOD) committee to develop a draft ordinance to require workforce housing in new development projects throughout the community. The committee worked for more than a year, held 30 meetings and sought input from citizens and interest groups. After numerous public hearings and revisions, a final draft ordinance was presented to the City Council in April 2006. However, the ordinance was never brought to the Council table for a vote. Those who opposed the ordinance were concerned that:

- The estimated annual cost of $46,500 to administer and monitor the program would be too low.
- The small geographic areas of the city where the ordinance would apply would put city developers at a disadvantage in marketing their units. It was argued that the IZ should be county-wide.
- The transect zoning districts (T-4, T-5, T-6) did not have a definable base density that was dependable and predictable.
- Developers could achieve the same affordable housing goals voluntarily.

Recent Housing Trends

Unlike many other parts of the country, the 2008 economic downturn caused only a brief pause in residential construction in Saratoga Springs. Housing prices dipped only slightly, then continued their steady climb. Since the downturn, several large multi-family residential projects have been built, adding more than 850 residential units within the city limits. Had the proposed IZ ordinance been adopted in 2006, between 75 and 150 affordable units would have been built in the succeeding 9 years.

Other Housing Diversity Programs Don't Work as Well as an IZ Ordinance

Over the past few years, Sustainable Saratoga has evaluated existing affordable housing programs as well as other approaches to housing affordability in Saratoga Springs.

- The various programs operated by the Saratoga Springs Housing Authority, the City of Saratoga Springs and some non-profit entities have been successful in meeting some of the needs of low income households.

- The voluntary affordable housing incentives offered in Articles 4.1 (Density Bonus for Affordable Senior Housing), and 4.3 (Density Bonus for Public Recreation or Affordable Housing) of the City's zoning ordinance have not resulted in the addition of affordable housing units.
- The Saratoga Workforce Housing Trust Fund was established by the City Council in 2004, with the goal of acquiring public and private funding for affordable housing projects. However, funding has been limited.
- A community housing land trust is a nonprofit, community-based organization whose mission is to provide affordable housing in perpetuity by owning land and leasing it to those who live in houses built on that land. While these organizations have been successful in many parts of the country, the capital required to create and operate one in the high-priced real estate market of Saratoga Springs is very difficult to obtain.
- Employer-funded housing programs would be hard to initiate and operate in a small community such as ours.
- Density bonuses for on-site employee housing are likely to be controversial.
- In 2014 Sustainable Saratoga developed and presented to the City an incentive program for voluntary carriage house conversions, with the goal of providing more workforce housing. Such a program could supplement the proposed IZ ordinance. However, as a volunteer program, it is likely to add relatively few affordable housing units.

Advantages and Disadvantages of an IZ Ordinance

Advantages:

- Because it is mandatory, it is more effective in creating affordable housing than programs involving incentives for voluntary action by developers.
- It is a housing program with minimal costs to City government. The City does not pay to construct and manage housing, but only has administrative costs to manage and monitor the program.
- The program is designed so that the developer's costs, including the lower sale or rental prices for IZ units, are largely offset by the density bonuses.
- It has the potential to provide the most new middle-income housing at the lowest cost to taxpayers.
- It promotes a desirable mix of housing types, including middle-income housing, in new residential developments throughout the city, and avoids segregating housing by income level.
- It provides for housing diversity within the parameters of existing zoning regulations.

Disadvantages:

- It increases the involvement of city government in the housing market.
- It allows for an increase in density over what is permitted by the zoning ordinance.
- It might make it more difficult for developers to rent or sell market-rate units to households concerned about the proximity of middle-income housing.

Sustainable Saratoga believes the advantages of the IZ ordinance far outweigh the disadvantages.

How Would the SPA Housing Ordinance Work?

Sustainable Saratoga is recommending that essentially the same IZ ordinance drafted in 2006 be re-introduced, with a new name. The extensive research done in 2006 is still valid, and the need for such an ordinance is greater than ever. It is estimated that the adoption of the ordinance would result in the construction of 20 to 30 new units of affordable housing each year, depending on the number and size of residential development projects approved.

The proposed ordinance should not be viewed as a complete solution to the city's affordable housing needs. It is a long-term program that would be effective in adding more affordable housing units as the city grows over time, without requiring substantial government funding.

Key Provisions of the SPA Housing Ordinance

- Required number of affordable units:
  - Developments with 10 or more units would either dedicate 20 percent of the units for moderate income households or 10 percent of the units for low income households. This provision would apply to units both for rent and for sale, with some variations.
  - Rental units would remain affordable for 30 years. Units offered for sale would remain affordable in perpetuity.
  - Candidates for occupancy of the affordable units would be screened and monitored by the City and selected by lottery.
- Density Bonus:
  - In exchange for providing the required proportion of affordable units, the developer could increase the density of a development project by up to 20 percent. The Planning Board could relax certain development standards during the approval process.
- Developers would commit to the affordability requirements by entering into an "inclusionary housing agreement" with the City.
- A developer would be exempted from the requirements of the IZ ordinance for unusual conditions.
- The City would create a special committee to monitor the program and make any recommendations for changing the ordinance.

For more information contact: Sustainable Saratoga
Email: info@sustainablesaratoga.org
Or visit our website: www.sustainablesaratoga.org

Sustainable Saratoga is a not-for-profit organization that promotes sustainable practices and advocates for smart growth land use principles and procedures. Find out about our principles for smart land use in Saratoga here: http://www.sustainablesaratoga.org/work/hup/

Proposed SPA Housing Zoning Ordinance (August 2016)

(The following is "track change" record of how the current proposed ordinance amendment differs from the proposed 2006 draft ordinance)

Proposed Amendments to the Zoning Ordinance of the City of Saratoga Springs

ARTICLE 4.4~~II-A~~ – INCLUSIONARY ZONING

240-4.4~~II-A~~.1 LEGISLATIVE FINDINGS

A. The City Council of the City of Saratoga Springs finds that:

(1) Over the last decade, rising housing prices and rents have made it increasingly difficult for long-term City residents and workers to afford to live in the City, and may ultimately displace long-term residents who contribute so much to the City. Lack of access to decent affordable housing has a direct negative impact upon the health, safety and welfare of the residents of the City.

(2) Economic diversity is essential to the health of Saratoga Springs. A sound local economy requires a stable workforce at all wage levels. City businesses and employers are finding it more difficult to attract and retain employees, especially lower wage workers that have to live further from the City and endure longer commutes to work. This has the potential to harm the economic vitality of the City.

(3) Developers are in a unique position to produce needed units for working households at a reduced cost, provided the City grants them the ability to provide additional units over and above those currently permitted by zoning. Inclusionary zoning is a market-based response that achieves affordable housing by reducing or eliminating land cost through increased density.

(4) Inclusionary zoning can be enacted without discouraging development or negatively affecting community character. Inclusionary zoning approaches have been used successfully in communities nationwide to provide worker housing. Inclusionary housing policies can ensure an equitable distribution of affordable housing opportunities throughout all neighborhoods and zones of the City without excessive burden to any single site or area.

B. The City has reviewed inclusionary zoning ordinances and inclusionary housing studies from around the country and adapted provisions that are appropriate to the needs and opportunities that exist in this City, has consulted with the development community and other stakeholders, and has designed an approach

that is sensitive to the interests and concerns of this community.

240-4.4~~II~~A.2 PURPOSE

Now, therefore, the City Council of the City of Saratoga Springs, in accordance with the powers and authority vested in it by General City Law section 20 (24), 20 (25), and 81-d, hereby enacts this article in the best interests of the people of Saratoga Springs. The purposes of this article are to:

(1) Utilize market forces to produce homebuyer and rental housing units that are affordable to working households in the City through reasonable density bonuses and affordable unit pricing without undue financial burden.

(2) Encourage the development of housing affordable to a broad range of households with varying income levels, and mitigate the market forces excluding housing that meets the needs of all economic groups within the City.

(3) Promote the City's goal of increasing the workforce housing stock in a uniform and predictable manner and in proportion to the overall increase in new housing units.

(4) Ensure the availability of workforce housing throughout the community and equitably share the responsibility for workforce housing across all neighborhoods.

(5) Mitigate environmental and other impacts that accompany new residential development by reducing traffic, transit and related air quality impacts, promoting a housing balance and reducing the demands placed on transportation infrastructure in the region.

(6) Prevent overcrowding and deterioration of the limited supply of workforce housing and, thereby, promote public health, safety and general welfare.

(7) Provide for efficient administration in the approval, implementation and monitoring of projects.

240-4.4~~II~~A.3 DEFINITIONS

As used in this article, the following terms shall have the following meanings:

AFFORDABLE RENT: Monthly rent that does not exceed one-twelfth of thirty-five percent (35%) of the maximum annual income for a household earning fifty percent (50%) of City Median Income (Low Income) or eighty percent (80%) of City Median Income (Moderate Income).

AFFORDABLE OWNERSHIP COST**:** A sales price that results in a monthly housing cost (including mortgage, insurance, property taxes and home association costs, if any) that

does not exceed one-twelfth of thirty-five percent (35%) of the maximum annual income for a household earning eighty percent (80%) of City Median Income (Moderate Income) or one hundred percent (100%) of City Median Income (Middle Income).

CITY MEDIAN INCOME: The median household income as established by HUD for the Albany-Schenectady-Troy Metropolitan Statistical Area, adjusted by the City Office of Planning and Economic Development for the percentage difference between the City Median Income and the MSA Median Income based on the decennial Census, or other method established by the Office of Planning and Economic Development for determining the Median Income of the City on an annual basis.

CITY**:** The City of Saratoga Springs.

COVERED PROJECT: Any project or projects that meet(s) the criteria of article 240-IIA.4A "Covered Projects."

DEVELOPER**:** Any person, firm, partnership, association, joint venture, corporation, or any entity or combination of entities with an identity of at least 10% proprietary interest, which seeks City approvals for all or part of a Covered Project or Projects.

HIGH COST PROJECT**:** A residential development in which the addition of the Inclusionary Units will result in higher incremental construction costs directly allocable to the Inclusionary Units. These additional costs may include, but are not limited to, addition of stories, extension of elevators, additional structural support, additional garaged parking spaces, upgraded exterior materials including masonry and stone veneer, required handicapped accessibility modifications, the substantial rehabilitation of unique historic structures or features, or unusual changes or additional requirements imposed by regulatory authorities.

HOUSEHOLD**:** One person living alone or two or more persons sharing residency whose income is considered for housing payments.

HUD: The U.S. Department of Housing and Urban Development.

INCLUSIONARY HOUSING PLAN: A plan submitted by a Developer to provide compliance with this article.

INCLUSIONARY HOUSING AGREEMENT**:** A written agreement between a Developer and the City, as provided herein, to be recorded and that would run with the land.

INCLUSIONARY UNIT: A dwelling unit that must be offered at Affordable Rent or available at an Affordable Ownership Cost to Income Eligible Households, and is regulated with regard to selling price or rent level, marketing and initial occupancy, and continued requirements pertaining to resale or rents and occupancy for the minimum compliance period, as provided herein.

INCOME ELIGIBLE HOUSEHOLD: For an Inclusionary Unit for rent, a Household earning less than fifty percent (50%) of City Median Income (Low Income) or eighty percent (80%) of City Median Income (Moderate Income), as provided in article 240-IIA.6. For

an Inclusionary Unit for sale, a Household earning less than eighty percent (80%) of City Median Income (Moderate Income) or one hundred percent (100%) of City Median Income (Middle Income), as provided in article 240-IIA.6.

MARKET UNIT: A dwelling unit in a Covered Project that is not an Inclusionary Unit.
SEQR: New York State Environmental Quality Review.

SUBSTANTIAL REHABILITATION: A cost of rehabilitation that exceeds 50% of the market value of the building based on the quotient of the structure's current assessed value as indicated in the City's Assessment Records divided by the city's Equalization Rate.

240-4.4~~II~~A.4 COVERED PROJECTS AND EXEMPT PROJECTS

A. Covered Projects

Except as otherwise provided herein, this article shall apply to all building permit requests pertaining to the following projects:

(1) Any project of ten (10) or more new additional residential dwelling units that are produced through construction, substantial rehabilitation of existing structures, or adaptive reuse or conversion of a nonresidential use to a residential use.

(2) Multiple developments or projects by a Developer occurring on contiguous parcels or in substantial proximity to one another shall be considered in toto and shall be Covered Projects.

(3) Any project of less than 10 new residential units that, at the sole discretion of the Planning Board, may be permitted for voluntary inclusion as a Covered Project under this Article of the Zoning Ordinance. If approved, all requirements for Covered Projects shall apply.

B. Exempt Projects

This article shall not apply to all building permit requests pertaining to the following projects:

(1) Mobile homes.

(2) Any project that is developed by an educational institution for the exclusive residential use and occupancy by that institution's students.

(3) Any project that produces affordable units equal to, or in excess of, the requirements contained in this article.

(4) Any project for which building permit applications were properly filed before the date of enactment of this Article.

(5) Any project for which a final Planning Board decision of approval (final PUD site plan, final site plan, or final subdivision approval) was issued

before the date of enactment of this Article.

C. Temporary Suspension of Inclusionary Requirements for Covered Projects

In the event that the City's Office of Planning and Economic Development determines that the Waiting List is inadequate to support the development of additional Inclusionary Units, the Planning Board may suspend the Inclusionary Unit requirements for a specific Covered Project. In that event, no Density Bonus under 240-4.4~~II~~A.5 is provided.

240-4.4~~II~~A.5 DENSITY BONUS

To assist developers in meeting the requirements of this article, all Covered Projects shall be entitled to a density increase of no more than 20% of the number of units that the Covered Project is allowed under existing zoning or a lesser base number of units as originally proposed by the developer, as permitted subsequent to SEQR analysis or as may be established by the Planning Board. When determination of the number of units for a density bonus results in a fractional unit, any fraction of .5 or over shall be one additional unit, and any fraction below .5 will be rounded down. Notwithstanding the above, no provisions herein shall be construed as limiting the discretion of the Planning Board to conduct reviews of Covered Projects and to issue any decisions within the scope of its statutory authority.

240-4.4~~II~~A.6 REQUIREMENTS OF INCLUSIONARY UNITS

All Covered Projects shall meet the requirements for Inclusionary Units as specified in this section. The percentage of Inclusionary Units shall be calculated with a base number, or as may be established by the Planning Board, that does not include the bonus units added to the Covered Project.

A. Inclusionary Units – Rental

For Covered Projects where units are offered for rent, the number of Inclusionary Units shall be designated as follows. When determining the number of Inclusionary Units, any fraction of .5 or over shall be one additional unit, while any fraction below .5 will be rounded down.

If Inclusionary Unit rent is affordable to:	Required number of Inclusionary Units as a percentage of the Market Units
Low Income Households (up to 50% of area median)	10%
Moderate Income Households (50% - 80% of area median)	20%

(1) Affordable Rents. Maximum Affordable Rents for Inclusionary Units will be calculated as follows: one-twelfth of thirty-five percent (35%) of the maximum annual income for a household at the applicable income limit – either fifty percent (50%) of City Median Income (Low Income) or eighty percent (80%) of City Median Income (Moderate Income).

(2) In calculating the Affordable Rent of Inclusionary Units, the applicable income shall be based on the following relationship between unit size and Household size:

Unit Size	Household (HH) Size for Applicable Income
Efficiency units	1 person HH
One-bedroom units	1.5 person HH
Two-bedroom units	3 person HH
Three-bedroom units	4.5 person HH
Four-bedroom units	6 person HH

(3) The calculations of the initial rents for the Inclusionary Units shall be made by the City Office of Planning and Economic Development and shall be contained within the Inclusionary Housing Agreement for the Covered Project. The Office of Planning and Economic Development may revise these prices in the event of documented exceptional circumstances.

(4) In the event that a Covered Project receives additional subsidies from any public source to assist the Inclusionary Units, the value of such subsidies shall be used to reduce the rents and/or income limits for the Income Eligible Households to be served by the Units, as determined by the City Office of Planning and Economic Development.

B. Inclusionary Units – For Sale

For Covered Projects where units are offered for sale via the conveyance of a

deed or share for individual units, Inclusionary Units shall be designated in accordance with the following table. When determining the number of Inclusionary Units, any fraction of .5 or above shall be one additional unit, while any fraction below .5 will be rounded down.

If Inclusionary Unit sale is affordable to:	Required number of Inclusionary Units as a percentage of the Market Units
Moderate Income Households (up to 80% of area median)	15%
Middle Income Households (80% - 100% of area median)	20%

(1) Sales Price. Sales prices will be based on calculation of the Affordable Ownership Cost, which means a sales price that results in a monthly housing cost (including mortgage principal and interest, insurance, property taxes and home association costs, if any) that does not exceed one-twelfth of thirty-five percent (35%) of the maximum annual income for the applicable income limit – eighty percent (80%) of City Median Income (Moderate Income) or one hundred percent (100%) of City Median Income (Middle Income).

(2) With respect to Inclusionary Units offered for sale, the Affordable Ownership Cost will be calculated on the basis of:

(a) A down payment of no more than five percent (5%) of the purchase price; and

(b) An available fixed-rate thirty-year mortgage, using Fannie Mae's current interest rate, for the balance of the purchase price. (If the Developer can guarantee the availability of a fixed-rate thirty-year mortgage at a lower rate from the State of New York Mortgage Agency or other public agency for all of the Inclusionary Units in the Covered Project, a lower interest rate as provided by that agency may be used in calculating Affordable Ownership Cost.)

(3) The calculations of the initial sales prices for the Inclusionary Units shall be made by the City Office of Planning and Economic Development and shall be contained within the Inclusionary Housing Agreement for the Covered Project. The Office of Planning and Economic Development may revise these prices prior to initial occupancy in the event of documented exceptional circumstances.

(4) In the event that a Covered Project receives additional subsidies from any source to assist the Inclusionary Units, the value of such subsidies shall be used to reduce the sales prices and/or income limits for the Income Eligible Households to be served by the Units, as determined by the City Office of Planning and Economic Development.

(5) In the event that an individual buyer is able to provide a higher down payment or obtain a higher mortgage loan based on fixed-rate financing at a lower rate than provided in paragraph (2)(b) above, the additional Buyer Funds may be used by the buyer to purchase additional improvements to the Inclusionary Unit. Upon approval of the Office of Planning and Economic Development, said additional improvements can be added to the base price for purposes of determining resale under Article 240-4.4~~IIA~~.9B.

C. General Requirements for Covered Projects – Rental and For Sale Units

(1) Distribution
In order to assure an adequate distribution of Inclusionary Units by household size, the bedroom mix of Inclusionary Units in any Covered Project shall reflect the same ratio as the bedroom mix of the Market Units of the Project, unless waived by the Planning Board for good cause or requested by the Office of Planning and Economic Development based on the waiting list.

(2) Phasing
Inclusionary Units shall be made available for occupancy on approximately the same schedule as, or sooner than, a Covered Project's market units, except that certificates of occupancy for the last ten percent (10%) of the Market Units shall be withheld until certificates of occupancy have been issued for all of the Inclusionary Units. A schedule setting forth the phasing of the total number of units in a Covered Project, along with a schedule setting forth the phasing of the required Inclusionary Units, shall be established prior to the issuance of a building permit for any Covered Project.

(3) Comparability
Inclusionary Units may differ from the Market-Rate Units in a Covered Project with regard to interior amenities and gross floor area provided that:

(a) These differences, excluding differences related to unit size differentials, are not apparent in the general exterior appearance of the project's units and there is compliance with all exterior site requirements of the City.

(b) These differences do not include the reduction of insulation, windows, heating systems, and other improvements related to the energy efficiency of the Inclusionary Units.

(c) The gross floor area of the Inclusionary Units is not less than the following minimum requirements, unless waived by the Planning Board for good cause: one bedroom – 700 square feet, plus 150 square feet for each additional bedroom.

D. Inclusionary Housing Agreement

All Covered Projects are required to have an Inclusionary Housing Agreement approved as part of the final PUD site plan, final site plan or final subdivision approval by the Planning Board.

E. Restrictive Covenants

All Inclusionary Units produced shall have restrictive covenants, recorded and filed to run with the land, to ensure compliance with the occupancy, sale, rent and other requirements of this article, and provide for legal remedies for the City to enforce this article. These restrictive covenants shall be contained in the Inclusionary Housing Agreement approved by the City Planning Board.

240-4.4~~II~~A.7 RELIEF

The section identifies methods of relief from existing regulation to accommodate the requirements of this Article.

A. In order to accommodate the additional residential units required by this Article, the Planning Board may grant relief from the requirements set forth in the table below to the extent necessary so that the additional units are appropriately incorporated into the overall site plan. In doing so, the Planning Board must find that the resulting development is consistent with the general area and does not negatively impact the character of the surrounding neighborhoods. The intent is to provide a sufficient degree of specificity in site design and layout without unduly restricting creative and diverse solutions.

Zoning District	Requirements that may be relieved
T-6 Urban Core	Height: standard maximum height may be exceeded up to one story. The additional story shall contain no more than the number of additional units granted by the density bonus and these units shall be set back at least 10 feet from the facades of the story below
T-4 Urban Neighborhood T-5 Neighborhood Center	Height: as defined for the T-6 Urban Core district Build-to line, side and rear setbacks Parking requirements
Single-family Residential Districts (RR-~~1~~, SR-1, SR-2, UR-1,	Minimum lot size, mean width, maximum lot coverage Minimum yard dimensions Minimum floor area: units shall be a minimum of 700

UR-2)	square feet for 1 bedroom plus 150 square feet for each additional bedroom Number of principal buildings & residences: to permit carriage house/accessory apartments and duplexes, and only to the extent to accommodate the additional units
Single- and two-family Residential Districts (UR-3, UR-4, UR-4A, UR-7, NCD-1,2,3)	Minimum lot size, mean width, maximum lot coverage, minimum permeability Minimum yard dimensions Minimum floor area: units shall be a minimum of 700 square feet for a 1 bedroom plus 150 square feet for each additional bedroom Number of principal buildings & residences – to permit carriage house/accessory apartments and duplexes, and only to the extent to accommodate the additional units
Multi-family Residential Districts (UR-5)	Minimum lot size, mean width, maximum lot coverage, minimum permeability Minimum yard dimensions Minimum floor area – units shall be a minimum of 700 square feet for 1 bedroom plus 150 square feet for each additional bedroom

B. Reduction in Inclusionary Units
In the event the Planning Board cannot approve a full density bonus, as prescribed in Section 240-4.4~~II~~A.5 “Density Bonus”, the number of required Inclusionary Units shall be reduced in proportion to the ratio of proposed Inclusionary Units to the proposed density bonus (i.e., if the developer has proposed that all density bonus units be Inclusionary Units, then 100% (20%/20%) of the reduction shall be Inclusionary Units; if the developer has proposed the 15% Inclusionary Unit option, then 75% (15%/20%) of the reduction shall be Inclusionary Units; if the developer has proposed the 10% Inclusionary Unit option, then 50% of the reduction in units shall be Inclusionary Units.)

C. High Cost Project
In the event a Developer can establish by clear and convincing financial data to the Planning Board that the Covered Project constitutes a High Cost Project, the Planning Board, in consultation with the City Office of Planning and Economic Development, may permit the Developer to offer the required Inclusionary Units to households at up to 20% above the applicable income limits and prices in 240-4.4~~II~~A.6.

D. Relief from this Ordinance
If the developer requests full relief from this Article to eliminate the provision of all Inclusionary Units, relief shall be sought from the Zoning Board of Appeals through a ~~use~~ variance.

240-4.4~~II~~A.8 SALE/LEASING OF INCLUSIONARY UNITS

Any Developer of a Covered Project shall adhere to the following provisions and to the

provisions of the Inclusionary Housing Agreement with respect to the initial offering of Inclusionary Units for sale or rent.

A. Ineligible Households. No Inclusionary Units may be rented or sold to any person who will not reside in that unit year-round, or to any person who is claimed as a dependent on another person's federal or state tax return.

B. Occupant Qualification. Occupancy of Inclusionary Units shall be by households qualified by the City.

C. Notice of Availability. The Developer shall notify the City Office of Planning and Economic Development of the prospective availability of any Inclusionary Units at least 180 days before such Units shall be available for lease or sale in a Covered Project.

D. Waiting List. Upon such notice, the Office of Planning and Economic Development shall provide to the Developer a list of qualified Income Eligible Households based upon the City's waiting list for Inclusionary Unit housing. Referrals will be made by the City based on priority to Income Eligible Households who are, at the time that the units are offered for sale or lease, residing or working, first, in the City and, second, in the County of Saratoga. The Developer will consider applicants in the order specified in the list, to rent or sell the Inclusionary Units, and may take into account any standard and lawful screening of applicants uniformly applied to all applicants for Inclusionary and market units. The developer shall comply with all fair housing laws. Referrals from the list will respect any conditions of occupancy, including elderly and/or handicapped occupancy, legally imposed by public financing.

E. Release from Inclusionary Unit Restrictions. If, after the initial 180 days following the Notice of Availability, a developer is still unable to secure a qualified, Income Eligible Household for an Inclusionary Unit from the City's Waiting List, the City Office of Planning and Economic Development shall approve the release of the Inclusionary Unit restrictions and that unit may be sold or leased as a Market Unit. The excess proceeds of this sale, over and above the approved Inclusionary Unit sale price plus legitimate and reasonable carrying and sales costs of the developer, shall be repaid to the City and used to support the purposes of this Inclusionary Zoning Article.

F. Reasonable Accommodations and Modifications. The City will operate the program and maintain the waiting lists in compliance with the Americans With Disabilities Act to ensure access to persons with disabilities.

(1) For homebuyer units, the City will notify the developer of referral of a household that includes a person with disabilities. The developer shall make reasonable accommodations in working with that household, and install reasonable modifications as required by the household to occupy the unit. Said reasonable modifications shall be at the expense of the household, and the sales price of the Inclusionary Unit may be adjusted to reflect the reasonable modifications.

(2) For rental units, when the City determines that the likely applicants for Inclusionary Units will include households with disabilities, the City will designate handicapped accessible units in the development to be reserved as Inclusionary Units as part of the Inclusionary Housing Agreement. The developer will make reasonable accommodations to provide housing to the household containing persons with disabilities.

240-4.4~~II~~A.9 CONTINUED AFFORDABILITY REQUIREMENTS

A. Rental Projects

All rental Covered Projects shall comply with the following provisions, which shall be contained in an Inclusionary Housing Agreement to ensure continued affordability of Inclusionary Units.

(1) Minimum Affordability Period. All Inclusionary Units shall remain affordable for a period of no less than thirty (30) years commencing from the date of initial occupancy of the units.

(2) Rent Increases. Increases in the annual rent for Inclusionary Units during the minimum affordability period shall be limited to the percentage increase in the Consumer Price Index for the Albany-Schenectady-Troy Metropolitan Statistical Area. Increases above this percentage require the approval in advance and in writing from the City Office of Planning and Economic Development, which shall approve increases based on documented hardship or other exceptional conditions.

(3) Rental Report. Owners of rental Inclusionary Units shall provide such information annually to the City, as determined by the City Office of Planning and Economic Development and the Inclusionary Housing Agreement, to ensure compliance with continuing occupancy and rent restrictions.

(4) Maintenance of Units. Owners shall comply with all local codes and standards with respect to Inclusionary Units, and provide maintenance services to the Inclusionary Units in the same manner provided all units in the Project.

(5) Lease and Sublet Restrictions. During the affordability period, the owner or occupant may not sublet an Inclusionary Unit to a Household other than an Income Eligible Household, or at a rent in excess of the Affordable Rent.

(6) Sale of Project. If the Covered Project is sold during the Minimum Affordability Period, the use restrictions shall run with the land, and the new buyer will meet all restrictions of the Inclusionary Housing Agreement for the remainder of the period. The City shall charge the seller a fee to cover the costs of approving and recording the transfer.

B. Homebuyer Projects

All homebuyer Inclusionary Units shall comply with resale restrictions, which shall be contained in an Inclusionary Housing Agreement with the Developer and legally recorded with each sale. Transfer to an original co-owner does not constitute a resale for this purpose, but the transfer is subject to all restrictions of the original covenants, and any subsequent resale is subject to these provisions.

(1) Shared Interest in Proceeds of Sale. At the time of the initial sale of the Inclusionary Unit, the City will determine the Buyer's Interest and the City's Interest based upon current Market Value determined by appraisal as if the property was unrestricted. The Buyer's Interest will be the percentage that the Buyer's Funds, including down payment and mortgage(s), constitute of the current full market value at time of initial sale. Buyer's Funds can include additional improvements as defined in Article 240-4.4~~II~~A.6B(5), but do not include any mortgages, subsidies or buy downs provided by the City or other public sources.

The City's Interest will be the remainder interest; that is, the Subsidy Amount (Market Value minus Buyer's Funds) divided by the Market Value at time of initial sale.

(2) Resale Price. The resale price shall be the Buyer's Interest multiplied by the current Market Value as an unrestricted unit at time of resale. The Office of Planning and Economic Development shall determine the market value of the unit by appraisal, the cost of which is to be borne by the seller.

(3) Notice of Intent to Sell. At any time the original Buyer wishes to offer an Inclusionary Unit for resale, the Buyer (now the Seller) must notify the City Office of Planning and Economic Development. The City (or its designee) shall provide one or more eligible buyers from the list of eligible buyers within thirty (30) days from notification. If the City declines or fails to provide an eligible buyer after 120 days from the notice to sell, the City Office of Planning and Economic Development may release the Inclusionary Unit restrictions on this unit, and the unit may be sold as an unrestricted unit, with the City recapturing its portion of the gross proceeds based on the City's Interest in Article 240-4.4~~II~~A.9B(1) above.

(4) Transaction Fee. The City shall charge a fee to cover the costs of resale charged to the seller out of net proceeds.

240-4.4~~II~~A.10 ADMINISTRATION

A. Inclusionary Housing Plan

The developer will submit a proposed Inclusionary Housing Plan to the City Office of Planning and Economic Development in advance of Planning Board review. The Office will review the proposed plan for consistency with this Article,

and provide comments to the developer and to the Planning Board.

B. Inclusionary Housing Agreement
All Covered Projects are required to have an Inclusionary Housing Agreement approved as part of the final PUD site plan, site plan or subdivision approval by the Planning Board. The City Office of Planning and Economic Development will prepare the Inclusionary Housing Agreement. Notwithstanding any other provision of this article, no special use permit, site plan, change of use, subdivision approval, building permit or occupancy permit shall be granted for any dwelling unit in a Covered Project unless an Inclusionary Housing Agreement has been approved by the Planning Board.

C. Expedited Processing and Waiver of Fees

(1) Expedited Approvals and Permit Review. Structures that provide the required Inclusionary Units shall receive priority for building permit review and development approvals, and multiple IZ units with identical plans will receive single plan review.

(2) Waiver of Fees. All municipal fees associated with the development and construction of new residential units shall be waived only as they apply to the required Inclusionary Units.

D. Oversight and Enforcement
The City Office of Planning and Economic Development will monitor Covered Projects during implementation, review occupancy reports submitted by developers, and approve the transfer or re-occupancy of Inclusionary Units.

(1) Post-Approval Administrative Actions. In the event of unforeseen and unavoidable changes in costs, the Office of Planning and Economic Development shall have the authority to adjust pricing and eligible income levels, but changes in the number of Inclusionary Units in the Inclusionary Housing Agreement will require Planning Board approval.

(2) Certificate of Occupancy. No final certificate of occupancy shall be issued for a Covered Project unless all Inclusionary Units within the Covered Project are eligible for a certificate of occupancy, except that, with respect to Covered Projects to be constructed in phases, certificates of occupancy may be issued on a phased basis consistent with the provisions of this Article.

(3) Enforcement. Violations of this article shall be punishable as provided by Article 240-9.2~~13~~. In addition, any certificates of occupancy for Market Units in a Covered Project found to be in violation of this article may be revoked upon a finding of substantial non-compliance hereunder.

E. Annual Report and Evaluation
The City Office of Planning and Economic Development shall monitor activity under this article and shall provide an annual report on activities and costs to the

City Council. In addition, the Council shall cause this Article to be evaluated every three years, or in conjunction with the Comprehensive Plan review. In accordance with the City Charter, the Mayor shall have the authority to appoint a committee that includes representation of the inclusionary zoning program administrative staff, the Planning Board, the development industry and affordable housing experts to monitor the initial implementation of the ordinance and make recommendations.

EXEMPTION OF FEES FOR INCLUSIONARY UNITS:

In the annual resolution of the City Council, there shall be no application fees for the inclusionary units in a site plan or subdivision application, There shall be no cash-in-lieu of recreation land fee for the inclusionary units.

~~*3.1. Proposed Amendment Creating Article 240-13.6G Exemption for Inclusionary Units*~~

~~To add a new subsection "G" to read as follows:~~

~~"Article 240-13.6G Exemption for Inclusionary Units~~
~~The above mentioned fees shall not apply to any inclusionary zoning units or units which shall have received all required approvals under Article IIA of the Zoning Ordinance entitled, "Inclusionary Zoning"."~~

~~*3.2. Proposed Amendment to Subdivision Regulations, Appendix A*~~

~~To add the following to Appendix A:~~

~~"Fees established in this appendix shall not apply to any inclusionary zoning units or units which shall have received all required approvals under Article IIA of the Zoning Ordinance entitled, "Inclusionary Zoning"."~~

~~*3.3. Proposed Amendment to City Code Chapter 231, Section 231-48, "Application for Service; Connection Fees"*~~

~~To add a new subsection "D" to read as follows:~~

~~"D. Fees established in this section shall not apply to any inclusionary zoning units or units which shall have received all required approvals under Article IIA of the Zoning Ordinance entitled, "Inclusionary Zoning"."~~

Questions & Answers:
Proposed "Saratoga Places for All" (SPA) Housing Ordinance (August 2016)

(The following "Questions & Answers" are from the City's 2006 Inclusionary Zoning Ordinance, updated by Sustainable Saratoga to reflect data relevant to the current SPA-Housing Ordinance proposal.)

Why is Sustainable Saratoga supporting this proposal?

- Sustainable Saratoga advocates for sustainable smart growth policies. One such policy is that the City should have adequate, diverse housing.

What is the SPA-Housing ordinance?

- SPA-Housing is an inclusionary zoning (IZ) ordinance that requires developers of larger housing (sale or rental) developments to include some affordable units to households of modest income. Developers are given a modest density bonus, or the right to build more units, to offset the costs of producing these units. The proposed ordinance for Saratoga Springs requires developments of 10 or more new units to dedicate 10 to 20 percent (depending on target income level) of the new units to be affordable in exchange for a 20 percent density bonus. Over 500 other communities in the country have enacted similar ordinances.

What does the SPA-Housing Ordinance require?

- Developments with 10 or more new RENTAL units must set aside either:
  - 20% of units for households earning under $65,000 (less than 80% of Area Median Income – AMI, based on a 4-person household) or
  - 10% of units for households earning under $41,000 (less than 50% of AMI, based on a 4-person household)
- Developments with 10 or more new FOR SALE units must set aside either:
  - 20% of units for households earning under $82,000 (less than 100% of AMI, 4 persons) or
  - 15% of units for households earning under $65,000 (less than 80% of AMI, 4 persons)
- Density bonus - In exchange for providing the Inclusionary Units, the developer may increase the total number of units in the project by up to 20%.
- As necessary and appropriate to accommodate the Inclusionary Units, the Planning Board can relax certain regulations, depending on the zoning district.
- Developers will enter into an "Inclusionary Housing Agreement" with the City to assure that the conditions of inclusionary zoning are met.

Are there any exceptions?

- The Ordinance would apply citywide to new construction, substantial rehab or conversions, except for:
  - Exclusively non-residential development
  - Developments with fewer than 10 new units (unless developer requests & City approves)
- The Planning Board can waive part or all of the Inclusionary Zoning (IZ) requirements if it determines the additional units cannot be accommodated on site without detrimental impact.
- Developers may request "relief" from IZ through the Zoning Board of Appeals.

How will the Inclusionary Units be priced?

- Maximum rents and sales prices will be determined annually based on income levels. The Ordinance provides formulas for determining what the rents or sale prices for the affordable units will be.
- For certain "high cost" construction, the developer may seek Planning Board approval to set the price to target a slightly higher income level (up to 20% higher).

How will the Inclusionary Units differ from the market-rate units?

- In order to make the units affordable, inclusionary units may be smaller in size and contain less expensive interior finishes and amenities than the market rate units.
- Exterior finishes must be comparable to the market-rate units.

How long will the Inclusionary Units remain affordable?

- Rental units must remain affordable for at least 30 years.
- For sale units will remain affordable in perpetuity, with unit owners receiving net proceeds of the sale in proportion to their original investment.
- Affordability requirements are maintained through restrictive covenants & deed restrictions.

Who will be eligible for an Inclusionary Unit?

- The City Office of Planning and Economic Development will create and maintain a waiting list of eligible candidates based on income limits (adjusted annually).
- Priority is given first to households that reside or work in the City, second priority to households that reside or work in Saratoga County.
- Developers of Inclusionary Units will use this list to rent or sell the units.
- Seasonal or part-time residents will not be eligible.
- Subletting an inclusionary unit to a non-income-eligible party is prohibited; on turnover, new occupants will be selected from the City waiting list.

How will the program be monitored to make certain it works in Saratoga Springs?

- The Mayor is authorized to appoint a committee of experts to monitor the initial implementation of the Ordinance and to make recommendations for changes.
- The Planning Board can waive the requirements for individual projects where it is determined the IZ units cannot be provided without detrimental impact.
- If the City's waiting list is exhausted, the Planning Board can suspend the requirements for projects, or release individual units to market sale (with the excess proceeds being used to support this Ordinance).
- An annual report will be provided to the Council. An evaluation is scheduled every 3 years, which is the minimum time necessary to allow initial projects to be completed and units occupied.
- The City Council has the authority to amend this or any other portion of the City's Zoning Ordinance as needed.

How many affordable units will this produce?

- Based on recent years, 15 to 30 units could be produced each year, although this could be higher or lower depending on the market and the types of projects approved. Under current market conditions, these units are likely to be mostly rental units, although over time the Ordinance may also result in the creation of owner-occupied units.

Where will these units be produced?

- Consistent with the IZ principle of "fair share", IZ units will be produced throughout the City, in proportion to the zoning density that applies to that particular neighborhood or site. The SPA Housing program is consistent with the relative housing densities proposed in the City's Comprehensive Plan.
- The number of IZ units that any one area receives will be determined by the amount of new housing development in that area.

Who will these units be for?

- It is envisioned that these units will serve local residents – elderly residents who can no longer keep up with the tax and maintenance burden of single family ownership, young people who grew up here and are returning to raise their families in Saratoga, and people who have jobs in the City or County and want to live closer to work. The Ordinance gives priority to households of modest income that live or work in Saratoga Springs. Based on current incomes, IZ units would serve a two-person household earning $32,800 - $52,500 for rental housing, and up to about $65,600 for homeownership. For a four-person household, IZ units would serve households in the $41,000 - $65,000 range for rental units, and up to $82,000 for homebuyer units. These income ranges are adjusted annually.

How will IZ be administered and what are the costs?

- The ordinance is designed to minimize the administrative impact on our small city government. The Office of Planning and Economic Development (OPED) will administer the ordinance. While some staff time is required, these are functions are already performed by OPED in other city housing programs, so the added workload is incremental, not new.. Based on recent development activity, OPED and the 2006 Committee concluded that the administrative functions constitute about ½ person, or about $55,000 in the first year and about $45,600 in subsequent years (in 2006 dollars). The City is currently reviewing these estimates.

Why do we need to do this? Is there an affordable housing crisis in Saratoga Springs?

- The US Department of Housing and Urban Development (HUD) says that housing is not affordable if the occupants of the unit are paying more than 30% of their income for housing costs (rent, mortgage, utilities, insurance, etc.).
- 25% of all homeowners in Saratoga Springs spend more than 30% of their income on housing costs. This represents 1,596 households.
- 44% of all renters in Saratoga Springs spend more than 30% of their income on housing costs. This represents 2,154 households.
- 33% of all households in Saratoga Springs spend more than 30% of their income on housing costs. This represents 3,750 households.

Why is housing so expensive in Saratoga Springs?

- The reasons are many, but essentially there is very strong demand and a limited supply. The many positive qualities of Saratoga Springs have made it a very desirable place to live for people moving to and working in the Capital District. Saratoga's appeal as a tourist and resort area is causing more and more of its housing stock to be claimed for vacation homes and second homes. Real estate investors are drawn to Saratoga Springs as an attractive

community to invest in high-end projects. As a result of this rising demand, land costs and building costs have increased to widen the gap between housing prices and area incomes.

Isn't this a short-term problem? Won't the housing market settle down and become more affordable in the future?

- Housing markets are cyclical and do not remain static. No one can predict the future of our local housing market, or whether prices will go up or down. This ordinance is designed as a long-term strategy to gradually add units in proportion to how the community grows. If the market slows and becomes more affordable, fewer market and IZ units will be produced.

If I'm already a homeowner in Saratoga Springs, why is affordable housing my problem?

- Although you may be secure in your home, we believe that the affordable housing may still impact you as a consumer, as an employer and as a family. If working middle class people cannot find housing that is affordable, the community as a whole suffers. Workers vital to the stability and health of the community—both professional and blue-collar workers—will not be available to provide the services needed by our citizens. Businesses will not locate or expand here if they are unable to recruit a local workforce, and this can threaten our local economy. On a more personal level, you may find that it will be harder to keep your family living close by – your children may have to move away to raise families, or your parents may not be able to afford to live close by as they age and need your support.

Isn't it reasonable to expect some people to commute from less expensive outlying areas?

- Employers indicate that this housing market affects recruitment, turnover and absenteeism. Workers who can't live close to their workplace are more likely to change their workplace location in order to shorten their commutes. Also, workers with long commutes are more likely to miss work, reducing the ability of local businesses to provide quality services. With uncertainty in fuel prices, workers have even more incentive to find employment close to their homes. And ultimately, housing choices should exist for working families and the elderly.

What are the impacts of the SPA-Housing Ordinance?

- There are over 500 IZ ordinances in effect nationwide, with different provisions and different levels of success. This proposed ordinance for Saratoga Springs drew on that range of experiences to develop a modest approach that is appropriate to Saratoga Springs and that will not negatively affect the special character of our community. Some of the key concerns about potential negative impacts of the IZ ordinances are discussed below.

Will the SPA-Housing Ordinance discourage development in Saratoga?

- It should not. In some IZ communities where the IZ requirement has become a severe burden to the developer, this has been the case. However, this ordinance has been carefully designed based on financial analyses so that these additional IZ units can be provided by the developer at a price that covers the developer's costs of construction and overhead. IZ requirements apply only when units can be added to the overall development plan, so there will not be a reduction in what the developer could produce without IZ. Therefore, while developers take on some additional near-term burden in building the IZ units, there is no long-term burden or financial cost to the developer. As long as there is market demand for the production of additional housing units in Saratoga, developers should be able to continue to produce units.

Will IZ units alter the character and appearance of the entire development or the neighborhood?

- It should not. The IZ units must be the same type as the market units -- for-sale units within for-sale projects or rental units within rental projects. The IZ units will be required to blend in with the market rate units in terms of exterior design, finishes and aesthetics. Only certain development requirements listed in the ordinance, such as setbacks, are waived, and only to the extent needed to incorporate the affordable units. Where the units cannot be constructed without detrimental impact on the development and the community, the requirements can be reduced or waived by the Planning Board.

Will IZ units have an impact on traffic and other environmental issues of concern?

- All developments covered by this ordinance are put through an environmental analysis following the State Environmental Quality Review (SEQR) process. The IZ units will be part of that, and changes to the design and other mitigation will be considered as part of that process prior to Planning Board approval. In addition, the proposed ordinance itself must receive SEQR review prior to enactment.

Will the SPA-Housing Ordinance threaten Saratoga Springs' greenbelt or rural areas?

- IZ applies within the City's existing zoning to all areas of the City. Therefore, inclusionary zoning will apply in the less densely zoned areas of the city, but in concentrations which reflect the lower density of those rural zones.

Will IZ units be produced disproportionately in certain neighborhoods?

- The ordinance is developed on the core principle of fair share. IZ requirements apply to all neighborhoods and areas of the City, in direct proportion to the existing zoning requirements in that area. It is likely that the city's core area and perhaps certain neighborhoods might see more development in the future than others, so these areas might see more IZ units than other areas. However, IZ units can be produced only on the development site and not shifted to other neighborhoods.

Does this change the local review process and the roles of the Planning Board, Design Review, or Zoning Board of Appeals?

- No. All existing review processes remain in place, and all authorities of the various review boards are preserved. The boards will be required to consider the IZ requirements as one of the overall requirements of the City, but not to the exclusion of other community concerns and requirements. The Planning Board will take the lead in incorporating the IZ requirements into the overall development approval. The Planning Board is authorized to grant relief from IZ requirements, and the developer still retains the right to appeal for full relief to the Zoning Board of Appeals.

Will Saratoga's taxpayers carry the burden of producing and subsidizing these units?

- There are no direct City subsidies contemplated or required for these units. However, there are administrative costs that have been estimated in 2006 at $46,500 per year. The City is currently reviewing these estimates. The owners of IZ units will pay property taxes comparable to other modest housing in the community.

Will SPA Housing Ordinance end up drawing households to Saratoga that will become a burden to the community?

- The first priority is for households who live or work in Saratoga Springs. The second priority is for households who live and work in Saratoga County. Households who occupy these units must be self-sufficient because there are no subsidies provided. The ordinance has a "circuit breaker" so that the Planning Board can suspend the requirements if the City has no qualified applicants on its waiting list when developments are approved, and the income restrictions can be waived for units when there are no qualified buyers.

Is the draft ordinance applying a model from Montgomery County, Maryland, or other communities that are larger, more urban, or fundamentally different than Saratoga?

- No. The 2006 Committee was advised by the Innovative Housing Institute, nationwide experts on IZ, and the key IHI consultant formerly worked in Montgomery County and shared the Montgomery County experience. However, this ordinance was not based on Montgomery County or any other community. It was drafted from scratch, drawing on the experience of a range of communities, and modified based on substantial community input. The end result is a totally unique ordinance that is unlike any other community's ordinance and tailored to the market and conditions in Saratoga Springs.

Why was a threshold of 10 units chosen?

- A 20% bonus only begins to make sense at 10 or more units. Because of the rounding required to get full units, a 20% bonus in smaller projects could have a dramatic and visible impact on density. The 2006 Committee looked at permits drawn in recent years, and has concluded that there would not be a significant increase in inclusionary unit production if the threshold were lowered to five units. The ordinance includes a voluntary provision where smaller projects could propose inclusionary units if it made sense from design and financial standpoints.

Can developers propose to build the IZ units off site?

- No. In cases where it is determined by the Planning Board that units cannot be accommodated on site, the requirement will be waived rather than shifted off site.

Does the City have the option to purchase the affordable units or change their use?

- No. This is not allowed, due to concerns that the intent and use of the units could be changed.

Will these families be able to afford the housing costs, including maintenance, taxes and homeowner association fees?

- The 2006 Committee analyzed the affordability, and created a pricing model that includes all costs, including taxes, insurance and homeowner association fees (if applicable). Taxes are based on assessments reflecting the lower price and value of the IZ units. In certain developments with high homeowner association fees, the pricing may need to be adjusted or subsidies provided to make it affordable. Maintenance and improvement of IZ units will be encouraged and taken into account for resale pricing.

Will the IZ unit buyers be able to enjoy appreciation in their unit value when they sell?

- Yes. Homeowners will be able to sell at a price that enables them to share in market appreciation in direct proportion to their initial investment when they sell. For example, if they were able to buy the unit at 60% of its original fair market value, they will be able to receive 60% of the appreciation at time of resale. The new buyer will continue to be a priority household in the eligible income range.

Why don't we just make inclusionary zoning a voluntary program?

- It is widely accepted that voluntary inclusionary zoning programs have been largely ineffective nationwide. Saratoga Springs has incorporated voluntary incentive-based affordable housing into its zoning standards for a number of years, but this has not resulted in the construction of any affordable units.. Also, if voluntary, it is likely that IZ units would not be produced throughout the City and this would result in higher concentrations of IZ units in some neighborhoods rather than others.

Wouldn't it be easier if the City just paid developers to build affordable units?

- It is the removal of land costs from the additional units, achieved through the density bonus, which permits IZ units to be offered at a more affordable price. To achieve similar pricing levels, the City would need to either build on City property, thereby concentrating these units, or provide substantial subsidies to offset the rising cost of available privately held land.

Shouldn't this be a County-wide program?

- The market pressures exist throughout the Saratoga region, but have become most focused in Saratoga Springs. While a County-wide strategy would produce more needed units, Saratoga Springs needs to address this problem whether or not other communities join in. We hope that our leadership on this issue will encourage other communities in the County to consider the benefits of creating their own inclusionary zoning programs.

Will inclusionary zoning solve all of our community's affordable housing needs?

- Inclusionary zoning is not a panacea, but it is an important tool in establishing a range of options to address affordable housing needs in Saratoga Springs. Providing these units through a private market solution allows Saratoga Springs to meet some of the need without large government subsidies and regulation by the state or Federal governments. It is a modest but truly local solution.

What if it doesn't work?

- Several features have been included in the Ordinance to enable it to be modified or suspended if it doesn't work or if there isn't sufficient demand.
  - (1) The Ordinance provides for a committee to monitor the initial implementation and to make recommendations for changes.
  - (2) There is a "circuit breaker" for the Planning Board to suspend the requirements for new developments if there is insufficient demand for the units.
  - (3) There is a provision to allow individual units to be sold at market value if eligible buyers cannot be found.
  - (4) The Ordinance requires an annual report to the Council on the IZ units produced.
  - (5) The Ordinance requires an evaluation of the Ordinance and its impact within three

years.

(6) And, of course, the City Council could choose to re-evaluate and change the ordinance at any point if it proves to be unsuccessful, has unintended loopholes or negatively affects the community.

Who drafted the 2006 ordinance?

- In early 2005, Mayor Michael Lenz created the Inclusionary Zoning Ordinance Development (IZOD) Committee to study the City housing issues and develop a new ordinance. The worked for over a year and in April 2006 delivered a new ordinance to the City Council. That committee consisted of Monte Franke (Chair), Sonny Bonacio, Amy Durland, Matt Gabryshak and Vilma Heramia. Eric Schreck and Nancy Ohlin also served in the earlier months on the committee.

Why didn't the City Council adopted the draft ordinance in 2006?

- We can only speculate why the City Council did not adopt the draft ordinance as recommended by the IZOD Committee. There is official record of any public discussion of the Ordinance by the City Council.
- Sustainable Saratoga believes there probably were a number of factors that contributed to the lack of action. These might have included:
  - Desire to see if the ordinance could be adopted on a regional or county-wide level;
  - Suggestions by some developers that more time could allow affordable housing to be built on a voluntary basis;
  - Concern with forecasts of an uncertain housing market;
  - A tight City budget that were projecting employee layoffs.

HOUSING DATA
SARATOGA SPRINGS, NY

Compiled by Sustainable Saratoga (August 2016)

AFFORDABLE HOUSING:

The US Department of Housing and Urban Development (HUD) defines "Affordable Housing as "housing for which the occupant(s) is/are paying no more than 30 percent of his or her income for gross housing costs, including utilities".

The US Census's 2010-2014 American Community Survey reports:

SARATOGA SPRINGS:

- 24.81% of all homeowners spend more than 30% of their income on housing costs.
  - This represents 1,596 households
- 44.14% of all renters spend more than 30% of their income on housing costs.
  - This represents 2,154 households
- 33.15% of all households spend more than 30% of their income on housing costs.
  - This represents 3,750 households

COUNTY OF SARATOGA:

- 23.60% of all homeowners spend more than 30% of their income on housing costs.
- 42.62% of all renters spend more than 30% of their income on housing costs.

DEMOGRAPHIC:

The US Census 2000:

SARATOGA SPRINGS:

- Total populations: 26,586 (26,186 in 2000)
- Number of persons per household: 2.13 (2.21 in 2000)
- Number of occupied housing units: 11,312 (10,784 in 2000)
  - Number of owner-occupied housing units: 6,431
  - Number of renter-occupied housing units: 4,881

COST OF HOUSING:

The US Census's 2010-2014 American Community Survey reports:

SARATOGA SPRINGS:

- Mean value for owner-occupied units: $310,200
- Mean monthly gross rent for renter-occupied units: $988

COUNTY OF SARATOGA:

- Mean value for owner-occupied units:.$230,900
- Mean monthly gross rent for renter-occupied units: $978

City Data.com reports:

SARATOGA SPRINGS:

- Median gross rent in 2013: $1,011.
- Mean prices in 2013:
  - *All housing units: $*337,814;
  - Detached houses: $327,096
  - In 5-or-more-unit structures: $938,279
- Median house of condo value:
  - In 2013: $297,771
  - In 2000: $128,600

INCOMES:

The US Census's 2010-2013 American Community Survey reports:

SARATOGA SPRINGS:

- Per capita income: $39.,355
- Median household income: $67,303

COUNTY OF SARATOGA:

- Per capita income: $35,860
- Median household income: $70,581

City Data.com reports:

SARATOGA SPRINGS: (zip code area)

- Estimated median household income in 2013: $67,522

The US Department of Housing and Urban Development:

COUNTY OF SARATOGA: (no separate data available for City of Saratoga Springs)

- 2016 Median Income: $82,000
- 2016 Median household income by household size: (see table below)

HOUSEHOLD SIZE: (persons)	HOUSEHOLD INCOME (30% of Area Median)	HOUSEHOLD INCOME (50% of Area Median)	HOUSEHOLD INCOME (80% of Area Median)	**HOUSEHOLD INCOME (100% of Area Median)**	HOUSEHOLD INCOME (110% of Area Median)	HOUSEHOLD INCOME (120% of Area Median)
1	$17,250	$ 28,700	$ 45,950	**$57,400**	$63,150	$68,900
2	$19,700	$32,800	$52,500	**$65,600**	$72,150	$78,700
3	$22,150	$36,900	$59,050	**$73,800**	$81,200	$88,550
4	$24,600	$41,000	$65,000	**$82,000**	$90,200	$98,400
5	$28,450	$44,300	$70,850	**$88,600**	$97,450	$106,300
6	$32,600	$47,600	$76,100	**$95,200**	$104,700	$114,250
7	$36,750	$50,850	$81,350	**$101,700**	$11,850	$122,050
8	$40,900	$54,150	$86,600	**$108,300**	$119,150	$123,000

(All numbers rounded to nearest $50)

Sustainable Saratoga
PO Box 454
Saratoga Springs, NY 12866

[redacted]
www.sustainablesaratoga.org

August 5, 2016

Honorable Joanne Yepsen, Mayor
City of Saratoga Springs
City Hall
474 Broadway
Saratoga Springs, NY 12866

Dear Mayor Yepsen:

RE: SPA-HOUSING ORDINANCE

We have submitted to the City Council zoning amendment that would create "The Saratoga Places for All (SPA) Housing Ordinance". This is a zoning text amendment that is intended to create more diverse housing opportunities citywide –especially for the middle income households.

Due to the public benefit nature of this zoning text amendment we are requesting a waiver of the application fee. We also indicated this request on the application form.

Sincerely,

Harold J. Moran

Harry Moran
Chair

Attachments
cc: Commissioner John Franck
Commissioner Michele Madigan
Commissioner Chris Mathiesen
Commissioner Anthony Scirocco

SARATOGA COUNTY PLANNING BOARD

TOM L. LEWIS
CHAIRMAN

JASON KEMPER
DIRECTOR

September 22, 2016

John P. Franck, Commissioner of Accounts
City of Saratoga Springs
City Hall 474 Broadway
Saratoga Springs, NY 12866

RE: SCPB Referral Review#16-162-Text Zoning Amendment-Inclusionary Zoning

A zoning amendment to require that in residential developments of 10 or more units 20% of the units (for sale or rent) be dedicated as affordable to households of moderate or low income with the provision of a density bonus of 20% to the developer.

Received from the City of Saratoga Springs City Council on August 26, 2016.

Reviewed by the Saratoga County Planning Board on September 15, 2016.

Decision: Incomplete Application

Comments:

APPLICATION/NEED

On August 5, 2016 a letter from Mr. Harry Moran, Director of Sustainable Saratoga (SS), was submitted to Mayor Yepsen requesting City Council acceptance for further review the application by SS for a zoning amendment titled "The Saratoga Places for All (SPA) Housing Ordinance." On August 16th the City Council did vote to refer the proposed zoning amendment to both the city and county planning boards for their respective reviews and recommendations. The referral was received by the Saratoga County Planning Board (SCPB) on Aug. 26 and reviewed at its monthly meeting of September 15th. We note that at the present time the proposed legislation has not yet been heard as part of a public hearing held by the City Council, nor has review and a lead agency determination been made under SEQRA. The SCPB agrees that as noted in Sustainable Saratoga's August 6 letter, the efforts made in both 2006 and 2016 to provide "a good housing program for Saratoga Springs" are laudable and desirable, deserving of a detailed community discussion and consideration. We find, however, and cite below, that material to assist in a complete review of the proposed legislation was not part of the referral submitted and ask that such material be provided (or counsel's determination that it is not required) for the SCPB to take final action at its October 20th meeting. Perhaps once the city council holds its public hearing there will

50 WEST HIGH STREET
BALLSTON SPA, NY 12020

(518) 884-4705 PHONE
(518) 884-4780 FAX

be a clearer understanding of the material submitted to date and a further submission of supplemental (if necessary) material.

Just because a standard zoning ordinance exists there is no guarantee or surety provided (or implied) that there will be actual development of any property, much less in the manner prescribed or hoped for. If a municipality determines that it needs or desires to have a specific type of development, it can only zone to allow that use (or uses) and then allow market conditions to work – the question then becomes whether a developer will find it economically feasible to develop a certain property in the way that the zoning ordinance defines. That is why the city has again pursued a means by which a developer may be permitted to exceed standard zoning restrictions in exchange for meeting a community need, the provision of some type of affordable housing within a plan of development. Incentive zoning can be used to encourage developers to provide community amenities that cannot be required. It is notable that court decisions have recognized that affordable housing can only be built by providing incentives to private enterprise and that some municipalities have been mandated in some court decisions to use incentives and the elimination of costly regulatory requirements as means of setting aside an established percentage of all new housing units as affordable.

We recognize the need for the city council to look beyond standard zoning - to Incentive Zoning, as proposed then (2006) and now – for a means of implementing the development of some type of affordable housing within Saratoga Springs. In different sections of the draft ordinance and correspondence this has been noted as workforce housing, moderate-income, and low-income housing. Legislative action, therefore, has been spearheaded by an advocacy group, Sustainable Saratoga – Advocate. Educate. Act. Legislation has been proposed to guarantee more diverse housing opportunities. SS has reintroduced a 2006 study and the then-proposed ordinance which provide for a density bonus along with a mandate to include an amount of affordable housing. Anecdotally, commentary has referenced the city's high cost of land for development, the resulting high cost of housing, and the need for housing that meets the needs of lower to middle-income households.

The amendment for inclusionary zoning proposes consideration of developments (for sale or rentals) of 10 or more dwelling units within which 20% of the units are dedicated for moderate-income households (or 10 % of rental units are dedicated toward low-income households). A developer "could" increase the density of a development project by "up to" 20% through this set aside provision. Without such legislated economic incentive and agreements a municipality is not able to require a builder/developer to provide public amenities as a condition of gaining his/her development approval. Zoning restrictions could not be exceeded. But, through such an amendment a developer can be offered a bonus in greater density above what the zoning otherwise permits and the community will benefit by obtaining an amenity it sees as necessary and desirable for its citizens.

In order for this legislation to be considered a completed draft for review we note that:

- It should be determined (documented in study and review) that the amenity to be received (affordable housing) is needed and useful.
    - Is there an analysis of the number of existing housing units that are classified as occupied by low-income and moderate-income (and workforce housing?) households?
    - Is there a definitive number of such units that need to be built over the next 10 or 20 years to fill the gap between existing affordable housing units and what is needed? Has it been

determined in numbers what that latter need (the number of affordable housing units) is?
        - Has there been a citywide build-out analysis (presently or as an update of 2006 data) of lands in districts where residential development is permitted in order to determine the possible number of dwelling units that could be built, and
        - Under the provisions of the proposed ordinance, has that analysis determined the number of affordable housing units (by bonuses) that could then be built?
- The amenity must be effective in addressing an issue, meeting a need or solving a problem. Is the approval of/construction of affordable housing units through the use of density bonuses the only option being considered to address the issue?
- As determined by a financial analysis, the incentive must be sufficient to make it worthwhile for private enterprise to provide the housing type sought by the municipality. Has there been such an analysis by the city with all stakeholders?
- Therefore, we believe that the study that precedes this legislation must provide a cost-benefit analysis
        - Financial modeling data and development costs as input from architects, residential developers and builders (as noted by the chairman of the city's Inclusionary Zoning Ordinance Committee in 2005: "We just need to plug in the numbers," and "those numbers we can't pull out of the air. They have to be based on the hard science…").
- Concurrence needs to be obtained from stakeholders (municipal and private businesses) that the proposed legislation is favorable enough to serve as an inducement.
        - Developer can and will provide the community's desired but uneconomic amenity,
        - Developer will receive a definitive density bonus (not a subjective "up to" percent or a statement that density "could be increased" to…
        - No economic windfall received through the bonus
        - City land use board will provide for a full 20% density bonus
- The bonus in density must be carefully designed (and reviewed under SEQR and in accord with City Law section 81) to ensure that the municipality will not overload public services or adversely impact adjacent municipal services such as:
        - Water - supply
        - Sewer – capacity issues,
        - Street system – maintain flow of through traffic, no increase in need for signalization, signage, or on-street parking, and no intersection degradation in LOS ratings
        - Parking – potential for increased parking need, particularly in Transect Zones
            - Need for paid parking or garages?
        - Schools – Districts may be impacted, but have no land use decision-making ability
        - Fire and police protection – need for new or expanded locations? Limits to areas of service? Time for response?
        - Emergency services – same as above

The applicant has stated that the SEQR review conducted for the 2006 legislation is sufficient for consideration of the legislation proposed in 2016. For our record and

final review of the legislation we would like a determination from the city council (assuming lead agency status will be with the council) that it is satisfied with what is on record from 2006 and that there is no need to undertake a new review.

Additionally, we note that the referral submitted to SCPB is for the proposed amendment to the zoning ordinance. Does the city council believe that there should or should not have also been submitted for consideration (as part of that referral) an amendment to the 2015 Comprehensive Plan, or is only the zoning amendment being considered?

The "Purpose" section of the legislation makes repeated reference to workforce housing rather than the affordable housing (low-income, moderate-income) referenced in the materials supplementing the application/referral. It appears that the legislation carries over the terminology from 2006 committees and proposed legislation. Which housing type is it that the present amendment is addressing, if they are different in any manner?

In reference to the quantification questions raised above, for our clarification we ask that the applicant please identify what is being/should be quantified as the housing needs for the respective income levels. It is cited that the city has a goal of increasing the workforce housing stock – what is the present number of "workforce" housing units in the city and, then, what are the number of units available, occupied, needed? Also stated is that there is a "limited supply of workforce housing" but we ask where is this quantified?

Michael Valentine, Senior Planner
Authorized Agent for Saratoga County

DISCLAIMER: Recommendations made by the Saratoga County Planning Board on referrals and subdivisions are based upon the receipt and review of a "full statement of such proposed action" provided directly to SCPB by the municipal referring agency as stated under General Municipal Law section 239. A determination of action is rendered by the SCPB based upon the completeness and accuracy of information presented by its staff. The SCPB cannot be accountable for a decision rendered through incomplete or inaccurate information received as part of the complete statement.

SARATOGA BUILDERS
ASSOCIATION, INC.

August 1, 2016

Honorable Mayor Joanne Yepsen
City Hall – 474 Broadway
Saratoga Springs, NY 12866

RE: Affordable Housing Task Force

Dear Mayor Yepsen:

The Saratoga Builders Association, Inc. (SBA) is a non-profit, specialized professional trade association representing the entire building industry. Our members include home builders, developers, remodelers, suppliers, sub- contractors, financial institutions, architects, engineers, realtors, attorneys and other industry professionals. The SBA is committed to the continued growth, prosperity and quality of life in Saratoga County, including the City of Saratoga Springs.

As an organization, we offer our members opportunities to work together, learn and share information. We are also committed to supporting a diverse, quality housing stock for our region. Our members are currently involved with two Habitat for Humanity projects in Saratoga Springs. Additionally, proceeds from our *Showcase of Homes* benefit Rebuilding Together Saratoga County and Northern Saratoga Habitat for Humanity.

The SBA recognizes the issue of affordable housing is complex and will require a creative approach. We encourage you and the City Council to engage partners, such as the SBA, as you work to address it. The establishment of the Affordable Housing Task Force (Task Force) has once again started the affordable housing discussion in the City. The SBA would welcome an open dialogue with the City Council and the Task Force to discuss challenges and realistic, implementable approaches for addressing this very important issue.

Specifically, the SBA is interested in understanding if the Task Force has identified areas within the City to focus more affordable and diverse housing (through zoning, incentives, or other mechanisms). We would request that information be provided to the SBA and other partners. That important information could be shared with our members to assist in facilitating the City's goals of a more affordable and diverse housing stock.

SARATOGA BUILDERS
ASSOCIATION, INC.

Our members are the very professionals that construct or support the construction of quality housing that contributes to the high quality of life in Saratoga County. As such, we have the understanding and knowledge to approach this issue in a practical and realistic manner. Again, we encourage the City Council and the Task Force to engage industry partners to assist in tackling this issue in the City of Saratoga Springs. Further, we would also welcome the opportunity for a representative from the SBA to join the Task Force to ensure ongoing communication and coordination.

Should you have any information to share on the Task Force's efforts to date or wish to include the SBA in discussions about affordable housing solutions, please do not hesitate to contact me. We look forward to hearing from you.

Sincerely,

Barry Potoker
Executive Director

CC: Commissioner Franck, Commissioner Madigan, Commissioner Mathiesen, Commissioner Scirocco, Bradley Birge, SBA Board Members

SARATOGA BUILDERS
ASSOCIATION, INC.

August 29, 2016

Honorable Mayor Joanne Yepsen
City Hall – 474 Broadway
Saratoga Springs, NY 12866

Dear Mayor Yepsen:

You indicated in your comments at the August 16th City Council meeting that the Saratoga Builders Association (SBA) was "in favor of moving forward with this type of ordinance," referring to the proposed SPA Zoning Amendment presented by Sustainable Saratoga to be sent to City and County Planning Boards for advisory opinions.

To be clear, this is not the case, and is in no way what our letter indicated. In fact, the central point of our letter was a request that the SBA be invited to the table to help draft an effective ordinance. The fact that an entire ordinance amendment has been drafted and presented with little or no input from the builder/developer/finance community was exactly the situation our letter was seeking to avoid.

The process of creating affordable housing through incentive mechanisms is challenging and complex. Expecting an arbitrary collection of requirements, density bonus, and fee alterations will work because they appear to have "worked in another community" or because work done 10 years ago is "still valid" is preposterous and unrealistic.

As has too often been the case, broad politically charged ideas are playing a poor substitute for the real work that would be required to bring about meaningful change.

We have the tools to conduct a factual analysis - to look at the revenue impact of various requirement levels of affordable housing and competently show what the required offset would need to be to maintain a viable, financeable project. We have the expertise to produce feasibility studies and schematic pro-formas that can be discussed with and vetted by our local financial institutions. We have the experience to engage in an honest discussion about the vehement NIMBY attitudes we encounter in the neighborhoods in which we develop and how the City will act to mitigate the delays and expenses associated with countering them.

SARATOGA BUILDERS
ASSOCIATION, INC.

To be forced, by uninformed regulation, to build a product that is not financeable, does not result in more housing options, it results in no housing options.

We look forward to working with the other members of the task force to explore how the City and our members can work together to create a broader housing mix in our city.

Sincerely,

Barry Potoker
Executive Director

CC: Commissioner Franck, Commissioner Madigan, Commissioner Mathiesen, Commissioner Scirocco, Bradley Birge, SBA Board Members

Sustainable Saratoga
Advocate. Educate. Act.

Sustainable Saratoga
PO Box 454
Saratoga Springs, NY 12866

info@sustainablesaratoga.org
www.sustainablesaratoga.org

September 6, 2016

Mr. Mark Torpey, Chair
Saratoga Springs Planning Board
City Hall
474 Broadway
Saratoga Springs, NY 12866

Dear Mr. Torpey:

RE: SPA HOUSING ORDINANCE – ADVISORY OPINION TO THE CITY COUNCIL

We would like to offer some supportive information as the Planning Board undertakes its advisory opinion to the City Council on Sustainable Saratoga's application to amend the Zoning Ordinance to include language that requires that development projects of 10 or more units include units deemed affordable under current HUD income guidelines.

We understand that, at a minimum, your task is to determine 1) whether the proposed revision is consistent with the Comprehensive Plan; and 2) whether the proposed revision is not contrary to the general purpose and intent of the Zoning Ordinance.

We offer the following comments on these two tasks.

CONSISTENT WITH COMPREHENSIVE PLAN:

We believe the propose SPA Housing Ordinance is completely consistent with the 2015 Comprehensive Plan.

Specifically, we believe the proposed zoning amendment is consistent with the following recommended housing actions presented within the Comprehensive Plan.

> 3.4-50 Encourage a range of residential opportunities that will be available to all residents to promote the social and economic diversity vital to a balanced community.
>
> 3.4-51 Actively promote affordable housing of all types and tenure throughout the City, and avoid overconcentration in any one area to reduce the potential for isolation of income groups.
>
> a. Promote diversity of housing types in close proximity to employment centers such as Downtown, the hospital, Skidmore College, the racetracks, etc.
> b. Encourage the development of higher density residential alternatives within the urban core including the conversion to residential use of upper floors in commercial districts.
> c. Make greater use of City-owned properties for affordable housing and consider acquiring additional properties for this purpose.
>
> 3.4-54 Rehabilitate and develop affordable housing via a "whole-site approach" with attention to site location and layout, façade design, pedestrian movement and accessibility, adequate infrastructure provision, and sensitivity to historic preservation and neighborhood context. This will also assist to revitalize and/or preserve existing neighborhoods.

3.4-56 Promote more effective development incentives.

a. Consider incentives, such as density bonuses, temporary property tax relief from building setback, and parking requirements, to encourage affordability.
b. Consider providing infrastructure incentives for developments with affordable units.

3.4-57 Address procedural items related to housing Citywide.

a. Review zoning, subdivision, building codes, and develop policies to actively encourage affordable housing construction or redevelopment.
b. Investigate appropriate opportunities for the conversion, building, and permanent residential use of building code compliant accessory buildings such as carriage houses and garages.
c. Promote more aggressive enforcement of housing codes and zoning regulations.

We don't believe the proposed zoning amendment is inconsistent with any of the housing policies of the 2015 Comprehensive Plan.

We also note that the proposed density bonus in the proposed zoning amendment is totally consistent with the following policy statement on page 62 of the Comprehensive Plan:

Incentive Zoning Supporting Public Purpose:

Section 81-D of the NYS General City Law sets forth the conditions under which cities can enact incentive zoning. Saratoga Springs already has density bonuses for affordable housing and publicly accessible open space in several zoning districts. This legislation requires the density incentives to be consistent with the municipality's Comprehensive Plan. Therefore, public purpose density bonuses permitted by Section 81-D would be able to exceed the residential density caps in each of the land use categories.

CONSISTENT WITH GENERAL PURPOSE AND INTENT OF ZONING ORDINANCE:

The purpose and intent of the Zoning Ordinance is set forth in Article 1.3 of the ordinance and presented below. We believe the SPA Housing Ordinance zoning amendment is consistent with, and not contrary to, the intent and purposes described below.

1.3 INTENT AND PURPOSES

A. The intent of this Chapter is to encourage appropriate and orderly physical development; promote public health, safety, and general welfare; classify, designate and regulate the location and use of buildings, structures and land for agricultural, residential, commercial, industrial or other uses in appropriate places; and to divide the City of Saratoga Springs into districts of such number, shape and areas as may be deemed best suited to carry out these regulations and provide for their enforcement.

B. The regulations and district boundaries identified in this Chapter and upon the Zoning Map are made with the following additional purposes:
1. Facilitation of efficient, economical, and adequate provision of public utilities and services;
2 .Assurance of adequate sites for residential, agricultural, industrial, commercial and other appropriate uses;
3. Provision of privacy for families and the maximum protection of residential areas;
4. Prevention and reduction of traffic congestion so as to promote efficient and safe circulation of vehicles and pedestrians;

5. Gradual elimination of nonconforming uses;
6. Conservation of the taxable value of land and buildings while enhancing the appearance of the City of Saratoga Springs as a whole;
7. Encouragement of flexibility in the design and development of land;
8. Protection of the general environment in compliance with the objectives of applicable Federal and State statutory and regulatory programs;
9. Protection of the natural resources of the community including but not limited to the protection of the water resources of the City;
10. Safeguarding the heritage of the City of Saratoga Springs by preserving districts and landmarks in the City which reflect elements of its cultural, social, economic, political, artistic and architectural history;
11. Promoting the use of historic districts and landmarks for the education, pleasure and welfare of the citizens of the City.

In addition, we note that the structure of our proposed amendment is identical in substance to the draft created in 2006 by the Inclusionary Zoning Ordinance Development (IZOD) Committee. Due to the zoning ordinance reorganization that was undertaken in 2012, we have made some numbering changes to the amendment. In 2006 the inclusionary zoning amendment was proposed as Article 240-11A. With the new ordinance organization we propose this amendment as Article 240-4.4.

We appreciate the opportunity to provide these comments on this important zoning amendment.

Respectfully,

Harry Moran, Chair

cc: Mayor Joanne Yepsen
Commissioner John Franck
Commissioner Michele Madigan
Commissioner Chris Mathiesen
Commissioner Skip Scirocco

Sustainable Saratoga
PO Box 454
Saratoga Springs, NY 12866

info@sustainablesaratoga.org
www.sustainablesaratoga.org

October 6, 2016

Mr. Mark Torpey, Chair
Saratoga Springs Planning Board
City Hall
Saratoga Springs, New York 12866

Dear Mr. Torpey and Planning Board Members:

RE: SPA HOUSING ORDINANCE QUESTIONS AND ANSWERS

We understand that as a result of the discussion on the advisory opinion for the SPA Housing Ordinance at the September 8, 2016 meeting, the Planning Board has the following questions that are listed below. Our responses are presented after each question.

1. ***Is there a financial model available to show that developers will not lose money under this inclusionary zoning ordinance***?

    - In 2006, local developer, and original IZOD committee member, Sonny Bonacio ran a financial model using his private construction cost information. He allowed it to be reviewed by some local independent housing experts and the City's housing consultants. Based on this data, Mr. Bonacio and the IZOD committee concluded that developers would not lose money under the ordinance and that even the IZ units would be modestly profitable.
    - Sustainable Saratoga has not attempted an update on the financial model since we do not have the updated private construction costs. We have met with developers and have encouraged them to re-run the model if they suspected that the conclusion would be materially different than in 2006. We are prepared to find a housing expert to privately review for the City any new financial model that was run.
    - We have no reason to believe today that developers would lose money on the IZ units if this ordinance was adopted. The basic reason that this ordinance will work is due to the density bonus, which essentially guarantees that there are no land costs for the IZ units. Therefore, those units can be offered at a lower rent or sale price than the market-priced units in a development.

2. What are some similar size communities that have IZ ordinances?

- We haven't done a comprehensive analysis of all the reported 500 communities that have some kind of IZ ordinance.
- We have seen reports that indicate the following "small communities" have some type of IZ ordinance.
    - Davidson, NC (12,000)
    - Salem, NH (28,000)
    - Princeton, NJ (28,000)
    - West Hollywood, CA (35,000)
    - Montclair, NJ (40,000)
    - Burlington, VT (42,000)
- Each IZ ordinance is different. There is a lot of variation with respect to the level of density bonuses, percentage of required to be affordable units, eligibility of occupants, duration for the subsidies, etc. So it is nearly impossible, and somewhat meaningless, to compare IZ ordinances with one another.
- The SPA Housing Ordinance was carefully developed in 2006 in response to Saratoga Springs' development process and housing market. The ordinance is unique to Saratoga Springs.

3. Are there some communities that have been successful in creating IZ units?

- Yes, there are studies that report successful IZ programs in other communities. There are also studies that point to failures and problems with IZ projects in other communities.
- The internet is full of information on inclusionary zoning. We see little value in studies or discussing theses other ordinances, because the SPA Housing ordinance is uniquely designed for Saratoga Springs. One cannot effectively compare our ordinance with those different ordinances in other communities.
- But if the Planning Board would find a list of accomplishments from IZ ordinance in other communities helpful, here are a few:
    - In the first 10 years of Denver CO the IZ ordinance created 1,155 affordable units.
    - Since 1974 Montgomery County, Maryland created over 10,000 IZ units.
    - Between 1992 and 2003, over 1,200 IZ units were built in San Diego, CA.
    - Sacramento, CA has added 465 IZ units since 2000.
    - Burlington VT has created 284 IZ units since 1990.

4. What is the basic theory behind IZ ordinances? How do they vary from community to community?

- Inclusionary housing policies require developers of new market-rate real estate to provide affordable housing. It works well in communities where markets are driving up housing costs and displacing lower-income residents.
    - "For cities struggling to maintain economic integration, inclusionary housing is one of the most promising strategies to ensure that the benefits of development are shared widely." (Lincoln Institute of Land Policy, 2015)
- A well-designed IZ ordinance is intended to generate significant affordable housing without overburdening developers or negatively impacting the pace of development.
- IZ ordinances vary considerably. But some of the general characteristics are as follows:
    - Some are mandatory, but some are not.
    - Most require developers to sell or rent 10 to 20 percent of their new residential units to middle- to-lower-income households. The target income groups vary but commonly are households making between 50% and 110% of local median income.
    - Communities give a variety of off-sets for this requirement. Most give the developer a right to build at a higher density, some waive development requirements such as parking and setbacks, others give tax abatements.
    - Most require the IZ units to be located on site in a mixed-use project. But some allow in-lieu fees or provisions for the IZ units to be moved off site.
- Most studies show that successful IZ ordinances are ones that are designed to reflect the local culture, economic conditions and housing market.

5. ***Briefly describe how the approval process would work on an inclusionary zoning project that comes before the Planning Board***.

- By adopting the SPA Housing Ordinance, the City Council establishes the general rules and regulations for this inclusionary zoning program in Saratoga Springs. There are provisions for the City Council to annually monitor progress and to periodically make any needed adjustments or refinements in the ordinance. But the City Council has <u>no</u> involvement in any of the development projects that are covered by this ordinance.
- It is the City Planning Board that has full responsibility to implement the ordinance. The following is a brief "over-simplification" of how the process works.
    - During site plan review or the subdivision review process, the PB and the developer negotiate an "Inclusionary Housing Agreement" for any project that is to have 10 or more residential units.
        - The covered projects could be single family homes, apartments, condominiums, mixed-uses or any combination of any type of residential uses.

    - The developer first proposes a conceptual plan what he/she would like to build that is in conformance the zoning. The PB must then "accept" this conceptual plan.
        - In all zoning districts except the transect districts, the maximum number of units per site is set by the zoning density caps and by the site analysis of the property.
        - In the transect districts the maximum number of units is set by the allowable building envelop and the site analysis.
    - The developer then proposes to the PB the target income category for the IZ units and that helps determine the number of IZ units that will be set aside as affordable. That figure can be up to 20% of the total units in the zoning correct conceptual plan. The number of units set aside as IZ units then determines the number of density bonus units that the developer will receive.
    - The PB and the developer then negotiate or design a site development plan that best accommodates the density bonus units on the property and what relief (setbacks, heights, parking, etc.) the developer will be granted.
    - The PB and developer then agree on a final wording of Inclusionary Housing Agreement that is a legal document between the City and the developer.
    - Final site plan or subdivision approval can then be granted by the PB.
- The City staff is responsible for finding and screening households that will occupy the IZ units.
    - Priority can be given to existing city residents or people who currently work in the city.
    - A lottery may be used to select eligible households to occupy the IZ units.
    - The selected households then negotiate a rental or sale price for the IZ units, utilizing the required guidelines of the ordinance.
    - The City is required to do annual monitoring of all IZ units and project to be sure the conditions of the Inclusionary Housing Agreement are being met.

6. Why shouldn't this IZ ordinance be postponed and be included in the new UDO rezoning effort?

- In March of 2016, we submitted comments to the UDO consultants and City staff indicating that we were working on resubmitting the 2006 inclusionary zoning ordinance to the City Council. We recommended that this IZ ordinance be handled separately from the UDO process because of timing and complexity.
- We were very surprised that the September 6, 2016 UDO Diagnostic Report included the possibility that an inclusionary zoning provision be restudied and included in the UDO.

    - We suspect there is an inadequate budget and resources for the UDO process to restudy inclusionary zoning and we don't think that task is necessary or a good use of public funds.
- We do not recommend that the SPA Housing ordinance be postponed and folded into the UDO process.
    - There are no formal announced target dates yet for completing the UDO process. We suspect the UDO will not be completed until late 2017.
- The Saratoga Springs real estate market is very strong now. It would be a shame to keep postponing an excellent opportunity to create guaranteed affordable/workforce housing in this community. For the last 10 years, we feel that the City has "wasted" an opportunity but action now will still make a difference.

7. Why aren't all the questions answered in the SEQRA short form that was submitted with the application?

- On August 5, 2016 Sustainable Saratoga submitted to the City a SEQRA Short Environmental Assessment Form with Part I – Project Information completed.
    - The Planning Board has noted that questions #3 though # 21 had no "yes" or "no" boxes checked and they want know why we did not provide those answers. All those questions relate to site specific issues. Since our zoning amendment is a text amendment only and is not specific to any one site in the City, we felt that these questions were all "not applicable". Therefore, we did not answer them.
    - The City required us to provide a digital copy of this form that is downloaded from the NYS DEC website. The form does not allow one to enter "not applicable".
- We note that the City needs to complete Part II and maybe Part III of the SEQRA Long Form for this zoning amendment.
    - In 2006, the City staff drafted a detailed Part II and Part III of the SEQRA Long Form. This data may need to be updated and place in the new version of the SEQRA Forms.
    - The Saratoga County Planning Board has implied that the City may have to undertake a generic environmental impact statement (EIS) because this amendment involves a density bonus for a public purpose. We believe a generic EIS is not necessary unless the City Council determines the zoning amendment will have significant adverse impacts.

8. ***What are the true costs to the City of administering this ordinance?***

- In 2006, the IZOD committee, working with the City staff, developed a projection of administrative costs. They created a detailed spread sheet with tasks and assigned person-hours to each task. They then totaled all the hours and assigned an annual cost to those hours. They included costs for employee benefits and City overhead.

- The 2006 estimates were: $55,000 for the first year (for startup) and $46,500 for sequent years.

- In 2006, developer Sonny Bonacio suggested that the project cost estimate might be too low and that he was concerned that the program wouldn't succeed and that developers would lose valuable time and money if the program was not adequately staffed.
  - The IZOD Committee chair Monte Franke (a national housing consultant) did review the numbers for a second time and did not recommend any further revisions in the Committee's original estimates.
- On May 5, 2016, Sustainable Saratoga met with Mayor Yepsen and recommended that the Mayor's department take another look at the 2006 estimate to determine if they were still valid or needed to be revised. The Mayor told us that her staff would take care of this.
  - We are unsure of the current status of this review.
  - Sustainable Saratoga can NOT produce these cost estimates. The estimates have to come from the City.
- Some communities assign their own staff to administer the program. Some contract out the administrative tasks to other entities.
- Some communities with IZ programs fund the administrative costs with: general budget expenditures; federal housing block grant funds; new local inclusionary housing fee revenues collected from developers or IZ unit tenants/homebuyers; or, from a percentage of unit resale fees

9. ***What is the maximum rental or sale price in today's dollars for an IZ unit?***

- In 2006 the IZOD Committee and City staff worked with a formula to project these costs. They were as follows:

  Based on current (2006) income levels, the maximum sale prices are approximately:
  - $140,500-$180,00 for 1 bedroom units
  - $180,000-$299,500 for 3 bedroom units

  Based on current (2006) income levels, the maximum rents are approximately (per month):
  - $800-$1,280 for 1 bedroom units
  - $1,000-$1,600 for 3-bedroom unit
- Sustainable Saratoga does not have access to the formula or the data that goes into the formula. So, we can't update these figures, but we believe that the City Planning staff should be able to accomplish this task with the resources they have at their disposal.

10. Is the SPA Housing Ordinance compatible with the 2015 Comprehensive Plan and the general purpose and intent of the Zoning Ordinance?

- On September 2, 2016 Sustainable Saratoga submitted a separate letter that specifically addressed the two tasks that the Planning Board must address in their advisory opinion to the City Council.

- At a minimum, the Planning Board must determine 1) whether the proposed revision is consistent with the Comprehensive Plan; and 2) whether the proposed revision is not contrary to the general purpose and intent of the Zoning Ordinance.
- Consistent with 2015 Comprehensive Plan:
    - Our letter reference 5 specific policies in the Comp Plan that we believe are consistent with the SPA Housing Ordinance.
    - Our letter also references a specific policy of the Comp Plan that supports development density increases for a public purpose. In this case the public purpose is affordable housing.
- Not contrary to general purpose and intent of the Zoning Ordinance:
    - Our letter presents the two major purpose and intent of the Zoning Ordinance and we conclude our SPA Housing Ordinance is not contrary to of either of those.

We look forward to discussing this issue further with the Planning Board at the October 13, 2016 meeting during the advisory opinion review of the SPA Housing Ordinance.

Respectfully,

Harry Moran
Chair

cc: Mayor Joanne Yepsen
Commissioner John Franck
Commissioner Michele Madigan
Commissioner Chris Mathiesen
Commissioner Skip Scirocco

Sustainable Saratoga | Advocate. Educate. Act.

October 11, 2016

SUPPLEMENTAL MATERIAL FOR PLANNING BOARD:
SPA HOUSING ORDINANCE

The following is a more detailed response to question #5 in Sustainable Saratoga's October 6, 2016 letter to the Saratoga Springs Planning Board. The added text is presented in red**.**

5. Briefly describe how the approval process would work on an inclusionary zoning project that comes before the Planning Board.

- By adopting the SPA Housing Ordinance, the City Council establishes the general rules and regulations for this inclusionary zoning program in Saratoga Springs. There are provisions for the City Council to annually monitor progress and to periodically make any needed adjustments or refinements in the ordinance. But the City Council would have no involvement in any of the development projects that are covered by this ordinance.
- It is the City Planning Board that has full control and responsibility in the implementation of the ordinance. The following is a brief "over-simplification" of how the process works.
    - During site plan review or the subdivision review process, the PB and the developer negotiate an "Inclusionary Housing Agreement" for any project that is to have 10 or more residential units.
        - The covered projects could be single family homes, apartments, condominiums, mixed-uses or any combination of any type of residential uses.
    - The developer first proposes a conceptual plan of what he/she would like to build that is in conformance with the zoning. The PB would then "accept" this conceptual plan.
        - In all zoning districts except the transect districts, the maximum number of units per site is set by the zoning density caps and by the site analysis of the property.
            - In the RR and SR-1districts a conservation subdivision is required. So once the conservation analysis is completed and reviewed by the PB, the base density of 1 unit per 2 acres of developable land is determined. That base density is the starting point for the density bonus under the IZ ordinance.

        - In all other single–family, two-family and multi-family residential zoning districts, the ordinance specifies the minimum lot size for each residential unit.
    - In the transect district the maximum number of units is set by the allowable building envelop and the site analysis.
        - Density in the T-4, T-5 and T-6 district is set by the allowable building envelope. Mixed types of land uses are encouraged in all transect zones and non-residential uses are required on the first floor in the T-6 district.
        - The developer first proposes what mix of residential or non-residential uses can fit into the allowable building envelope determined by the site analysis. For example, the developer and the PB may agree that a site can have a maximum development capacity of 30,000 sq ft of non-residential use and 20 residential units. Those 20 units become the base residential density or starting point for the density bonus under the IZ ordinance.
- The developer then proposes to the PB the target income category for the IZ units and that helps determine the number of IZ units that will be set aside as affordable. That figure can be up to 20% of the total units in the zoning correct conceptual plan. The number of units set aside as IZ units then determine the number of density bonus units that the developer will receive.
    - RENTAL UNITS: The IZ ordinance states that if the developer wants to target their IZ units to “low income household” (up to 50% of AMI), they only have to designate10% of the total units as affordable. If the developer wants to target “moderate income households” (50%-80% of AMI), the developer has to provide 20% of the total units as affordable.
    - FOR SALE UNITS: The IZ ordinance says that if the developer wants to target their IZ units to “moderate income households” (up to 80% of AMI), they only have to provide 15% of the total units as affordable. If the developer wants to target “middle income households” (80%-100% of AMI), they have to provide 20% of the total units as affordable.
    - The number of units the developer decides to provide as IZ units determines the number of density bonus units. So on each development project the percentage of IZ units and the percentage of bonus units will be somewhere between 10% and 20%.
- The PB and the developer then negotiate or design a site development plan that best accommodates the density bonus units on the property and what relief (setbacks, heights, parking, etc.) the developer will be granted.

- Article 240-4.4.7A sets forth the type of zoning development relief that the Planning Board can grant the developer in order to best accommodate the bonus units. For example:
    - In the T-6, T-5 and T-4 districts, an additional floor can be added to the top of the proposed building provided the façade of the added floor is set back 10 feet from façade of the floor below.
    - In the T-5 and T-4 districts the build-to lines, side and rear setbacks can be waived. Also parking requirements can be waived.
    - In the other zoning districts, similar types of waivers can be granted by the Planning Board.
- If "unusual" circumstances are revealed during these negotiations, there are still a number of "adjustments" or "outs" available to the developer or the Planning Board.
    - Article 240-4.4.7B allows the Planning Board to reduce the number of required IZ units if the density bonus units cannot all fit on the property in a well designed project.
    - Article 240-4.4.7C allows the Planning Board to exceed the eligible household income categories for IZ units if the applicant can provide clear evidence that unique situations indicate the development is of higher than normal cost.
    - Article 240-4.4.7D allows the developer to appeal to the Zoning Board of Appeals to seek full or partial relief from the requirement of this ordinance.
    - Article 240-4.4.4C allows the Planning Board to suspend any IZ units set aside if the City does not have any list of eligible households (no waiting list).

o The PB and developer then agree on a final wording of Inclusionary Housing Agreement that is a legal document between the City and the developer.

- The Inclusionary Housing Agreement (IHA) is essentially a boiler plate document. Specific numbers for each specific development project are just plugged into the "blank spaces" on the form.
- The IHA includes the final acceptable range of sale prices or rental prices for each IZ unit. No eligible household annually pays more than 35% of their income for housing costs. The ordinance provides guidance that allows the City staff to complete these calculations.
- The IHA includes information of the proposed distribution, size, number of bedroom, phasing, interior amenities, etc. The ordinance provides guidance on these items.
- The IHA includes conditions for rent increases (or adjustments), unit maintenance, sublease prohibitions, unit resale price, etc.

        - The IHA includes all the enforcement requirements (restricted covenants, legal remedies, etc.) to implement the ordinance.
    - Final site plan or subdivision approval can then be granted by the PB.
- The City staff is responsible for finding and screening households that will occupy the IZ units.
    - Priority can be given to existing city residents or people who currently work in the city.
    - A lottery may be use to select eligible households to occupy the IZ units.
    - The selected households then negotiate a rental or sale price for the IZ units, utilizing the required guidelines of the ordinance.
    - The City is required to do annual monitoring of all IZ units and project to be sure the conditions of the Inclusionary Housing Agreement are being met.

CITY OF SARATOGA SPRINGS

PLANNING BOARD

City Hall - 474 Broadway
Saratoga Springs, New York 12866
Tel: 518-587-3550 fax: 518-580-9480
www.saratoga-springs.org

MARK TORPEY, Chair
ROBERT F. BRISTOL, Vice Chair
TOM L. LEWIS
CLIFFORD VAN WAGNER
HOWARD PINSLEY
JANET CASEY
JAMIN TOTINO
AMY DURLAND, Alternate
RUTH HORTON, Alternate

October 21, 2016

John Franck, Commissioner
Office of Commissioner of Accounts
City Hall - 474 Broadway
Saratoga Springs, New York 12866

RE: Advisory Opinion to the City Council
SPA Housing- Sustainable Saratoga Proposed Text Amendment
PB Project #16.034

Dear Commissioner:

Pursuant to your request dated August 23, 2016, the Planning Board is currently reviewing the SPA Housing proposed text amendment for issuance of an advisory opinion. To date, this item has been reviewed at it's September 8th, and October 13th meetings and is anticipated to be on the October 27th Planning Board agenda.

Per the Zoning Ordinance, the Planning Board has an initial 60 day timeframe in which to issue an advisory opinion. As the item is still under review, the Planning Board wishes to request additional time to allow for the review of this item.

If you have any questions regarding the above comments, please contact me.

Sincerely,

Mark R. Torpey

Mark Torpey
Chair

cc: Mayor Yepsen
Commissioner Madigan
Commissioner Mathiesen
Commissioner Scirocco
Kate Maynard, AICP, Principal Planner
Harry Moran, Applicant

CITY OF SARATOGA SPRINGS
ZONING BOARD OF APPEALS

CITY HALL - 474 BROADWAY
SARATOGA SPRINGS, NEW YORK 12866
PH) 518-587-3550 FX) 518-580-9480
WWW.SARATOGA-SPRINGS.ORG

Bill Moore, *Chair*
Keith B. Kaplan, *Vice Chair*
Adam McNeill, *Secretary*
Gary Hasbrouck
George "Skip" Carlson
James Helicke
Susan Steer
Cheryl Grey, alternate
Oksana Ludd, alternate

September 14, 2016

Mark Torpey, Chair
Planning Board
City Hall - 474 Broadway
Saratoga Springs, NY 12866

Re: Initiation of Coordinated SEQRA Review for Pet Lodge of Saratoga

Dear Mark,

On April 11, 2016 the Zoning Board of Appeals (ZBA) initiated Coordinated Review on the following project:

> #2910 PET LODGE OF SARATOGA, vacant lands on east side of Route 9/South Broadway (tax parcel nos. 191.8-1-1-6), coordination of SEQRA review and area variance to construct a pet boarding facility and associated site work in the Tourist Related Business and Rural Residential Districts.

The project was identified as an unlisted action with the Planning Board and the Design Review Commission as involved agencies. The ZBA deferred Lead Agency status to the Planning Board if they should seek it. The submitted part 1 of the short EAF is attached.

Respectfully yours,

Bill Moore, Chair
Zoning Board of Appeals

CITY OF SARATOGA SPRINGS

City Hall - 474 Broadway
Saratoga Springs, New York 12866
Tel: 518-587-3550 fax: 518-580-9480

[FOR OFFICE USE]

_____
(Application #)

_____
(Date received)

APPLICATION FOR:
APPEAL TO THE ZONING BOARD FOR AN INTERPRETATION, USE VARIANCE, AREA VARIANCE AND/OR VARIANCE EXTENSION

	APPLICANT(S)*	OWNER(S) *(If not applicant)*	ATTORNEY/AGENT
Name	Matt Sames	Bronx Springs Group	James Easton MJ Engineering
Address	[redacted]	183 Church Ave Ballston Spa, NY 12020	21 Corporate Drive, Suite 105 Clifton Park, NY 12065
Phone		/	[redacted]
Email			

* An applicant must be the property owner, lessee, or one with an option to lease or purchase the property in question.

Applicant's interest in the premises: ☑ Owner ☐ Lessee ☐ Under option to lease or purchase

PROPERTY INFORMATION

1. Property Address/Location: Route 9/Broadway Tax Parcel No.: 191.8-1-1 thru 1-6
(for example: 165.52 – 4 – 37)

2. Date acquired by current owner: under contract 3. Zoning District when purchased: TRB/RR-1

4. Present use of property: vacant 5. Current Zoning District: TRB/RR-1

6. Has a previous ZBA application/appeal been filed for this property?
☐ Yes (when? _____ For what?_____)
☑ No

7. Is property located within (check all that apply)?: ☐ Historic District ☐ Architectural Review District
☑ 500' of a State Park, city boundary, or county/state highway?

8. Brief description of proposed action:
Build a pet boarding facility within the RR-1 district.

9. Is there a written violation for this parcel that is not the subject of this application? ☐ Yes ☑ No

10. Has the work, use or occupancy to which this appeal relates already begun? ☐ Yes ☑ No

11. Identify the type of appeal you are requesting *(check all that apply)*.

☐ INTERPRETATION (p. 2) ☐ VARIANCE EXTENSION (p. 2) ☐ USE VARIANCE (pp. 3-6) ☑ AREA VARIANCE (pp. 6-7)

FEES: Make checks payable to the "Commissioner of Finance". Fees are cumulative and required for each request below.

☐ Interpretation	$ 400
☐ Use variance	$1,000
☑ Area variance	
-Residential use/property:	$ 150
-Non-residential use/property:	$ 500
☐ Extensions:	$ 150

INTERPRETATION – PLEASE ANSWER THE FOLLOWING (add additional information as necessary):

1. Identify the section(s) of the Zoning Ordinance for which you are seeking an interpretation:

Section(s) _____

2. How do you request that this section be interpreted? _____

3. If interpretation is denied, do you wish to request alternative zoning relief? ☐Yes ☐No

4. If the answer to #3 is "yes," what alternative relief do you request? ☐ Use Variance ☐ Area Variance

EXTENSION OF A VARIANCE – PLEASE ANSWER THE FOLLOWING (add additional information as necessary):

1. Date original variance was granted: _____ 2. Type of variance granted? ☐ Use ☐ Area

3. Date original variance expired: _____

5. Explain why the extension is necessary. Why wasn't the original timeframe sufficient?

When requesting an extension of time for an existing variance, the applicant must prove that the circumstances upon which the original variance was granted have not changed. Specifically demonstrate that there have been no significant changes on the site, in the neighborhood, or within the circumstances upon which the original variance was granted:

USE VARIANCE – PLEASE ANSWER THE FOLLOWING (add additional information as necessary):

A use variance is requested to permit the following: _____

For the Zoning Board to grant a request for a use variance, an applicant must prove that the zoning regulations create an unnecessary hardship in relation to that property. In seeking a use variance, New York State law requires an applicant to prove all four of the following "tests".

1. That the applicant cannot realize a reasonable financial return on initial investment for any currently permitted use on the property. "Dollars & cents" proof must be submitted as evidence. The property in question cannot yield a reasonable return for the following reasons:

A. Submit the following financial evidence relating to this property (attach additional evidence as needed):

1) Date of purchase: _____ Purchase amount: $_____

2) Indicate dates and costs of any improvements made to property after purchase:

Date	Improvement	Cost

3) Annual maintenance expenses: $_____ 4) Annual taxes: $_____

5) Annual income generated from property: $_____

6) City assessed value: $_____ Equalization rate:_____ Estimated Market Value: $_____

7) Appraised Value: $_____ Appraiser: _____ Date: _____

Appraisal Assumptions:_____

B. Has property been listed for sale with the Multiple Listing Service (MLS)? ☐Yes ☐No If "yes", for how long? _____

1) Original listing date(s): _____ Original listing price: $_____

If listing price was reduced, describe when and to what extent: _____

_____

2) Has the property been advertised in the newspapers or other publications? ☐Yes ☐No

If yes, describe frequency and name of publications: _____

_____

3) Has the property had a "For Sale" sign posted on it? ☐Yes ☐No

If yes, list dates when sign was posted: _____

_____

4) How many times has the property been shown and with what results? _____

_____

_____

2. That the financial hardship relating to this property is unique and does not apply to a substantial portion of the neighborhood. Difficulties shared with numerous other properties in the same neighborhood or district would not satisfy this requirement. This previously identified financial hardship is unique for the following reasons:

_____

_____

_____

_____

_____

_____

_____

_____

_____

_____

3. That the variance, if granted, will not alter the essential character of the neighborhood. Changes that will alter the character of a neighborhood or district would be at odds with the purpose of the Zoning Ordinance. The requested variance will not alter the character of the neighborhood for the following reasons:

4. That the alleged hardship has not been self-created. An applicant (whether the property owner or one acting on behalf of the property owner) cannot claim "unnecessary hardship" if that hardship was created by the applicant, or if the applicant acquired the property knowing (or was in a position to know) the conditions for which the applicant is seeking relief. The hardship has not been self-created for the following reasons:

AREA VARIANCE – PLEASE ANSWER THE FOLLOWING (add additional information as necessary):

The applicant requests relief from the following Zoning Ordinance article(s) 240-2.0

Dimensional Requirements	From	To
North Minimum Side Setback	30'	20'
South Minimum Side Setback	30'	20'
Total Side Setbacks	100'	40'
Minimum Average Width	200'	105'
Minimum Lot Size	2.0 AC	1.59 AC

Other:

To grant an area variance, the ZBA must balance the benefits to the applicant and the health, safety, and welfare of the neighborhood and community, taking into consideration the following:

1. Whether the benefit sought by the applicant can be achieved by other feasible means. Identify what alternatives to the variance have been explored (alternative designs, attempts to purchase land, etc.) and why they are not feasible.

   The existing building envelope varies from 5' to 8.8' wide, a variance is necessary to construct a usable building. The property to the south is, Pratt Drive, a private drive. The Applicant has written to the property owner to inquire about interest to sell property.

2. Whether granting the variance will produce an undesirable change in the character of the neighborhood or a detriment to nearby properties. Granting the variance will not create a detriment to nearby properties or an undesirable change in the neighborhood character for the following reasons:

   Animal clinic is an acceptable use in the RR-1 zone, where the building will be located. The building will be set back from the road and not visible.

3. Whether the variance is substantial. The requested variance is not substantial for the following reasons:
This variance is not substantial because the property abuts to TRB zone which has 20' minimum side setbacks.

4. Whether the variance will have adverse physical or environmental effects on neighborhood or district. The requested variance will not have an adverse physical or environmental effect on the neighborhood or district for the following reasons:
The building will be set back from the road and not visible.

5. Whether the alleged difficulty was self-created (although this does not necessarily preclude the granting of an area variance). Explain whether the alleged difficulty was or was not self-created:
The property width varies from 108.8' to 105', the building envelope varies from 8.8' to 5' wide, thus this is not self-created.

DISCLOSURE

Does any City officer, employee, or family member thereof have a financial interest (as defined by General Municipal Law Section 809) in this application? ☑ No ☐ Yes If "yes", a statement disclosing the name, residence and nature and extent of this interest must be filed with this application.

APPLICANT CERTIFICATION

I/we, the property owner(s), or purchaser(s)/lessee(s) under contract, of the land in question, hereby request an appearance before the Zoning Board of Appeals.

By the signature(s) attached hereto, I/we certify that the information provided within this application and accompanying documentation is, to the best of my/our knowledge, true and accurate. I/we further understand that intentionally providing false or misleading information is grounds for immediate denial of this application.

Furthermore, I/we hereby authorize the members of the Zoning Board of Appeals and designated City staff to enter the property associated with this application for purposes of conducting any necessary site inspections relating to this appeal.

_____ Date: 7/11/16
(applicant signature)

_____ Date: _____
(applicant signature)

If applicant is not the currently the owner of the property, the current owner must also sign.

Owner Signature: _____ (Bronx Springs Corp) Pres Date: 7/13/16

Owner Signature: _____ Date: _____

ZONING AND BUILDING INSPECTOR DENIAL OF APPLICATION FOR LAND USE AND/OR BUILDING

APPLICANT: _____ TAX PARCEL NO.: _____.____-_____-____

PROPERTY ADDRESS: _____ ZONING DISTRICT: _____

This applicant has applied to use the identified property within the City of Saratoga Springs for the following:

_____

_____

_____

This application is hereby denied upon the grounds that such use of the property would violate the City Zoning Ordinance article(s) _____. As such, the following relief would be required to proceed:

☐ Extension of existing variance ☐ Interpretation

☐ Use Variance to permit the following: _____

_____

_____

_____

☐ Area Variance seeking the following relief:

Dimensional Requirements	From	To
_____	_____	_____
_____	_____	_____
_____	_____	_____
_____	_____	_____
_____	_____	_____
_____	_____	_____

Other: _____

_____

Note: _____

☐ Advisory Opinion required from Saratoga County Planning Board

_____ _____

ZONING AND BUILDING INSPECTOR DATE

Revised 12/2015

Short Environmental Assessment Form
Part 1 - Project Information

Instructions for Completing

Part 1 - Project Information. The applicant or project sponsor is responsible for the completion of Part 1. Responses become part of the application for approval or funding, are subject to public review, and may be subject to further verification. Complete Part 1 based on information currently available. If additional research or investigation would be needed to fully respond to any item, please answer as thoroughly as possible based on current information.

Complete all items in Part 1. You may also provide any additional information which you believe will be needed by or useful to the lead agency; attach additional pages as necessary to supplement any item.

Part 1 - Project and Sponsor Information

Name of Action or Project:
Pet Lodge

Project Location (describe, and attach a location map):
Rt 9/Broadway Saratoga Springs, NY

Brief Description of Proposed Action:
Construct a pet boarding facility on existing vacant parcel(s)

Name of Applicant or Sponsor:	Telephone: [redacted]
Matt Sames	E-Mail: [redacted]

Address: [redacted]

City/PO:	State:	Zip Code:
[redacted]	[redacted]	[redacted]

	NO	YES
1. Does the proposed action only involve the legislative adoption of a plan, local law, ordinance, administrative rule, or regulation? If Yes, attach a narrative description of the intent of the proposed action and the environmental resources that may be affected in the municipality and proceed to Part 2. If no, continue to question 2.	☑	☐
2. Does the proposed action require a permit, approval or funding from any other governmental Agency? If Yes, list agency(s) name and permit or approval:	☑	☐

3.a. Total acreage of the site of the proposed action? 1.59 acres
b. Total acreage to be physically disturbed? .69 acres
c. Total acreage (project site and any contiguous properties) owned or controlled by the applicant or project sponsor? 1.59 acres

4. Check all land uses that occur on, adjoining and near the proposed action.
☐ Urban ☐ Rural (non-agriculture) ☐ Industrial ☑ Commercial ☐ Residential (suburban)
☑ Forest ☐ Agriculture ☐ Aquatic ☐ Other (specify): _____
☑ Parkland

	NO	YES	N/A
5. Is the proposed action, a. A permitted use under the zoning regulations?	☐	☑	☐
b. Consistent with the adopted comprehensive plan?	☐	☐	☐

	NO	YES
6. Is the proposed action consistent with the predominant character of the existing built or natural landscape?	☐	☑

	NO	YES
7. Is the site of the proposed action located in, or does it adjoin, a state listed Critical Environmental Area? If Yes, identify: _____	☑	☐

	NO	YES
8. a. Will the proposed action result in a substantial increase in traffic above present levels?	☑	☐
b. Are public transportation service(s) available at or near the site of the proposed action?	☑	☐
c. Are any pedestrian accommodations or bicycle routes available on or near site of the proposed action?	☑	☐

	NO	YES
9. Does the proposed action meet or exceed the state energy code requirements? If the proposed action will exceed requirements, describe design features and technologies:	☑	☐

	NO	YES
10. Will the proposed action connect to an existing public/private water supply? If No, describe method for providing potable water: _____	☐	☑

	NO	YES
11. Will the proposed action connect to existing wastewater utilities? If No, describe method for providing wastewater treatment: _____ private septic system	☑	☐

	NO	YES
12. a. Does the site contain a structure that is listed on either the State or National Register of Historic Places?	☑	☐
b. Is the proposed action located in an archeological sensitive area?	☐	☑

	NO	YES
13. a. Does any portion of the site of the proposed action, or lands adjoining the proposed action, contain wetlands or other waterbodies regulated by a federal, state or local agency?	☐	☑
b. Would the proposed action physically alter, or encroach into, any existing wetland or waterbody? If Yes, identify the wetland or waterbody and extent of alterations in square feet or acres: _____ approx. 500 SF of wetlands will be impacted	☐	☑

14. Identify the typical habitat types that occur on, or are likely to be found on the project site. Check all that apply:

☐ Shoreline ☑ Forest ☐ Agricultural/grasslands ☐ Early mid-successional
☑ Wetland ☐ Urban ☐ Suburban

	NO	YES
15. Does the site of the proposed action contain any species of animal, or associated habitats, listed by the State or Federal government as threatened or endangered?	☑	☐

	NO	YES
16. Is the project site located in the 100 year flood plain?	☑	☐

	NO	YES
17. Will the proposed action create storm water discharge, either from point or non-point sources? If Yes, a. Will storm water discharges flow to adjacent properties? ☑ NO ☐ YES	☐	☑
b. Will storm water discharges be directed to established conveyance systems (runoff and storm drains)? If Yes, briefly describe: ☐ NO ☑ YES In front to existing culvert along Route 9. In rear discharge to existing wetlands		

	NO	YES
18. Does the proposed action include construction or other activities that result in the impoundment of water or other liquids (e.g. retention pond, waste lagoon, dam)? If Yes, explain purpose and size: Creation of a detention basin, approx. 1500 SF	☐	☑
19. Has the site of the proposed action or an adjoining property been the location of an active or closed solid waste management facility? If Yes, describe:	☑	☐
20. Has the site of the proposed action or an adjoining property been the subject of remediation (ongoing or completed) for hazardous waste? If Yes, describe:	☑	☐

I AFFIRM THAT THE INFORMATION PROVIDED ABOVE IS TRUE AND ACCURATE TO THE BEST OF MY KNOWLEDGE

Applicant/sponsor name: MATT SAMES Date: 7/11/16

Signature:

PRINT FORM

EAF Mapper Summary Report

Thursday, July 07, 2016 12:05 PM

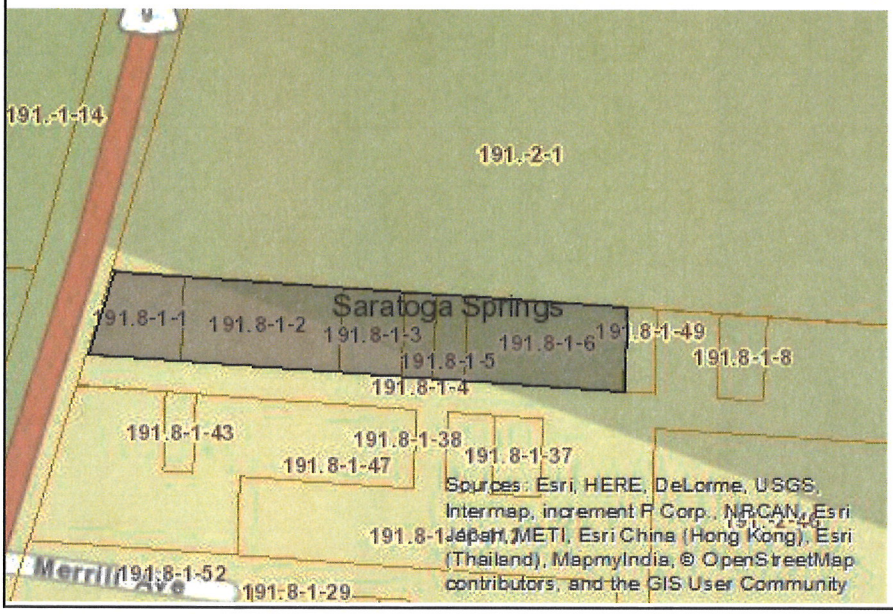

Disclaimer: The EAF Mapper is a screening tool intended to assist project sponsors and reviewing agencies in preparing an environmental assessment form (EAF). Not all questions asked in the EAF are answered by the EAF Mapper. Additional information on any EAF question can be obtained by consulting the EAF Workbooks. Although the EAF Mapper provides the most up-to-date digital data available to DEC, you may also need to contact local or other data sources in order to obtain data not provided by the Mapper. Digital data is not a substitute for agency determinations.

Part 1 / Question 7 [Critical Environmental Area]	No
Part 1 / Question 12a [National Register of Historic Places]	No
Part 1 / Question 12b [Archeological Sites]	Yes
Part 1 / Question 13a [Wetlands or Other Regulated Waterbodies]	Yes - Digital mapping information on local and federal wetlands and waterbodies is known to be incomplete. Refer to EAF Workbook.
Part 1 / Question 15 [Threatened or Endangered Animal]	No
Part 1 / Question 16 [100 Year Flood Plain]	Digital mapping data are not available or are incomplete. Refer to EAF Workbook.
Part 1 / Question 20 [Remediation Site]	No

Zoning Board of Appeals
Project Narrative
for

Pet Lodge
Route 9
City of Saratoga Springs
Saratoga County, New York

Prepared for:

Matt Sames,

Sames Media Group

Located at

19 Blue Jay Way

Rexford, NY 12148

July 8, 2016

Prepared by:

Engineering and Land Surveying, P.C.

21 Corporate Drive, Suite 105
Clifton Park, NY 12065

[redacted]

INTRODUCTION

The proposed project consists of 6 separate tax parcels in the City of Saratoga (tax parcels 191.08-1-1, 191.08-1-2, 191.08-1-3, 191.08-1-4, 191.08-1-5, 191.08-1-6) and the 6 parcel comprising 1.59 acres in total. The existing vacant tree lot is situated between a commercial business to the south and State park lands to the north. See attached aerial map and tax map. The proposal application wishes to build a 6,000 sf Animal Kennel on the parcels.

Zoning

The parcel(s) is divided almost in half between Rural Residential (RR-Zone) and Tourist Related Business (TRB-zone). The TRB zone is located in the front half of the parcel and RR-Zone in the rear of the parcel. The location of the TRB/RR zoning line has been established based upon the zoning map and is located at the eastern edge of tax parcel 191.08-1-2 per the zoning map or approximately 350' from centerline of Route 9. To the north of the site the zoning is Intuitional Parkland Recreation (INST-PR- Zone)

Parcel

The 6 parcels have a combined area of 1.59 acres and have a lot frontage of 108.8 feet and rear lot width of 105 feet and a depth of 644.4 feet.

Usage

The proposed use, Animal Kennel, is an approved use within the RR zone with a special use permit issued by the City. From the proposed concept plan the entire proposed building will be located within the RR zone.

Variances

As the 6 parcels are within two zones, the existing parcels within the RR zone do not conform to City on Lot size. The 4 rear parcels are less than the minimum allowed for either the RR or TRB zoning districts of 2.0 acres or 10,000 sf respectively.

As the lot varies from 105 feet to 108.8 feet in width, the front tax parcels conform to City code of 100 foot within the TRB zone, but as the rear existing 4 tax parcels are within RR zone and these parcel do not have 200 foot of frontage per City Code.

As the 4 rear tax parcels of the site vary from only 105 feet to 108.8 feet width of the side setbacks are 30 foot minimum and with a total of 100 feet required. This leaves a 5 feet to 8.8 feet wide envelope to build a structure, which is not feasible for a building to comport with NYS building code and ADA requirements.

Therefore based upon above information the project proposes the following variances for this project.

1. North Side minimum side setback from 30 feet to 20 feet within the RR zone
2. South Side minimum side setback from 30 feet to 20 feet within the RR zone
3. Total side setback of 100 feet to 40 feet within the RR zone
4. Minimum average with from 200 feet to 105 feet within RR zone
5. Minimum Lot size of 2.0 acres to 1.59 acres

The proposed North, South and Total Setbacks requested to 20 feet and a total of 40 feet match what is currently allowed under TRB zone in the front half of the site.

EXHIBITS:

Exhibit 1	**Aerial Map**
Exhibit 2	**Tax Map**
Exhibit 3	**Photo Location Map**
Exhibit 4	**Site Photos**

Aerial Map

Project Site
S Broadway
Hibachi Taeppan & Sushi
Saratoga Consignment Studio
Google
Imagery ©2016 Google, Map data ©2016 Google
100 ft

Tax Map

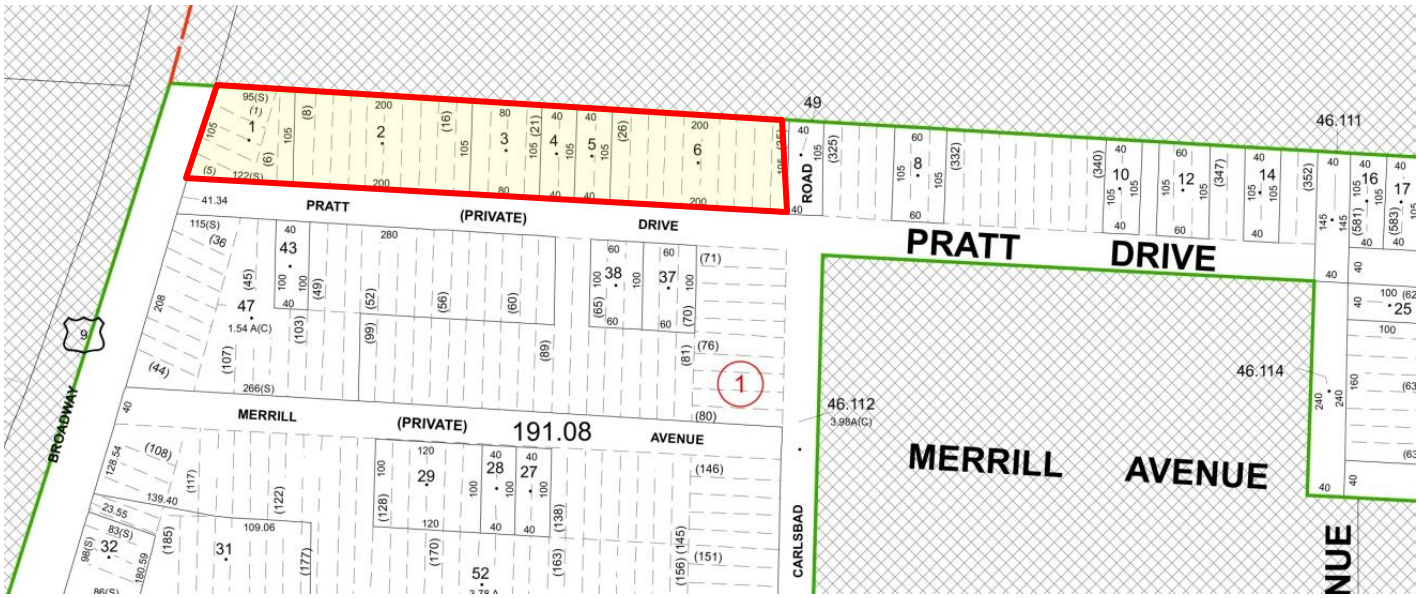
PRATT
(PRIVATE)
DRIVE
MERRILL
(PRIVATE)
191.08
AVENUE
BROADWAY
CARLSBAD
ROAD
PRATT
DRIVE
MERRILL
AVENUE
46.111
46.112
46.114
49

Photo Location Map

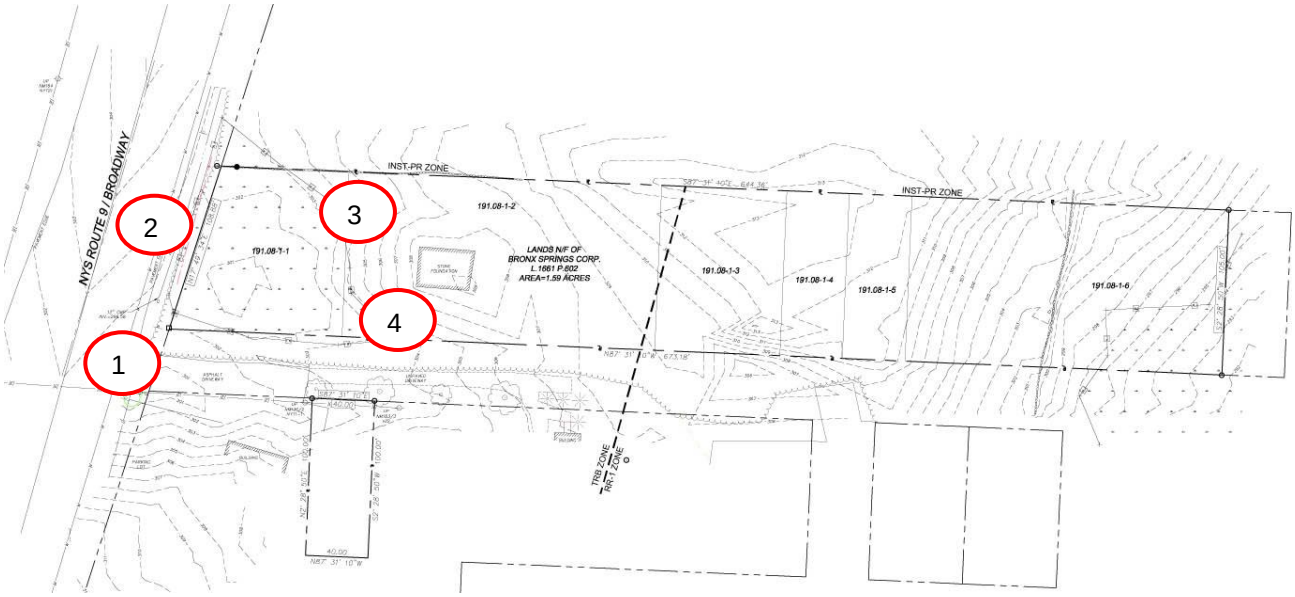

Photo 1

Photo 2

Photo 3

Photo 4

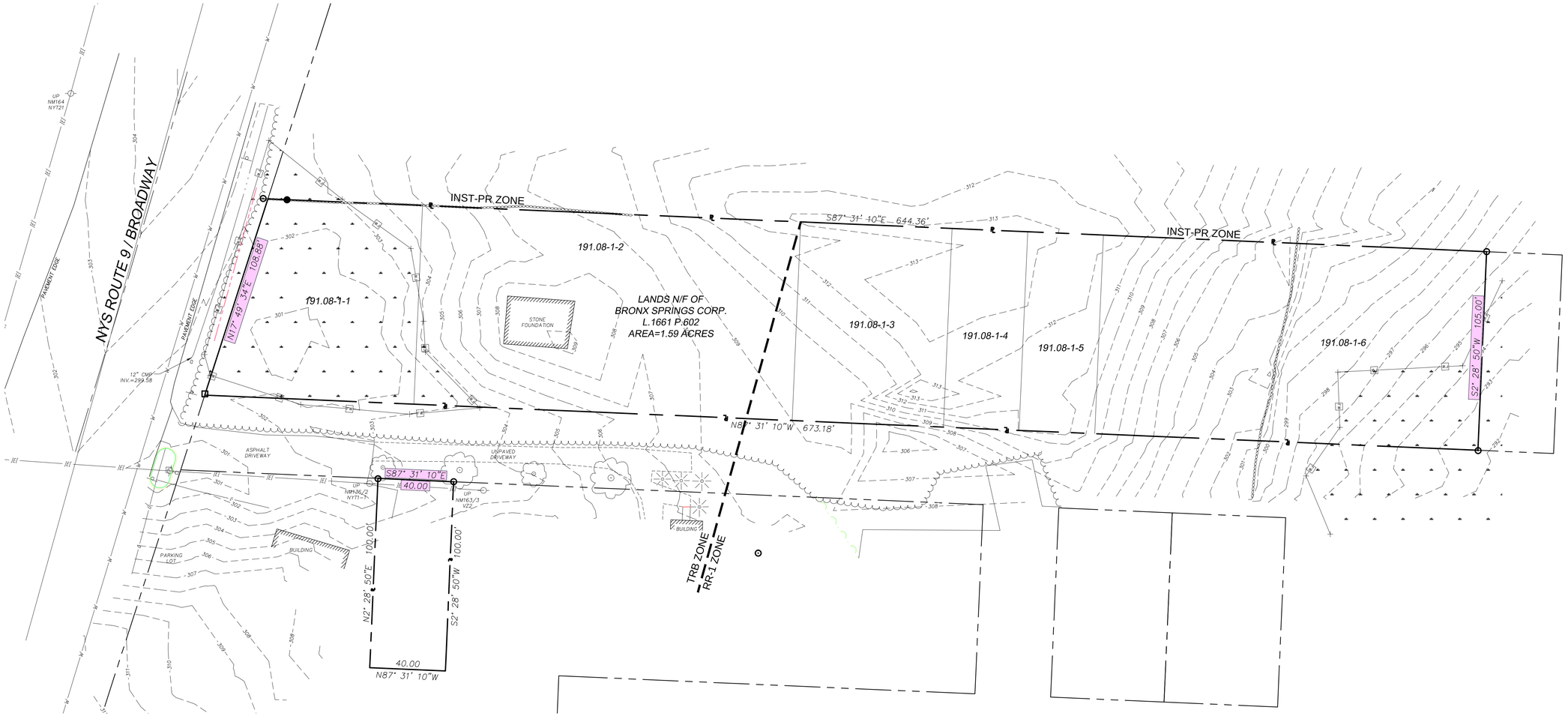

PRELIMINARY DRAWINGS: NOT FOR CONSTRUCTION

THE ALTERATION OF THIS MATERIAL IN ANY WAY, UNLESS DONE UNDER THE DIRECTION OF A COMPARABLE PROFESSIONAL, (I.E.) ARCHITECT FOR AN ARCHITECT, ENGINEER FOR AN ENGINEER OR LANDSCAPE ARCHITECT FOR A LANDSCAPE ARCHITECT, IS A VIOLATION OF THE NEW YORK STATE EDUCATION LAW AND/OR REGULATIONS AND IS A CLASS "A" MISDEMEANOR.

SUBMITTAL / REVISIONS

No.	DATE	DESCRIPTION	BY	REVIEWED BY:	DATE

PROJ. MANAGER:	JWE
CHIEF DESIGNER:	JWE
DESIGNED BY:	JWE
DRAWN BY:	JWE
CHECKED BY:	-

SEAL

DRAFT

Engineering and Land Surveying, P.C.
1533 Crescent Road - Clifton Park, NY 12065

MATT SAMES

EXISTING CONDITIONS

ROUTE 9

CITY OF SARATOGA SPRINGS NEW YORK

SCALE:	AS SHOWN
CONTRACT No.:	-
MJ PROJ. No.:	972.15
DATE:	JULY 2016

C-1

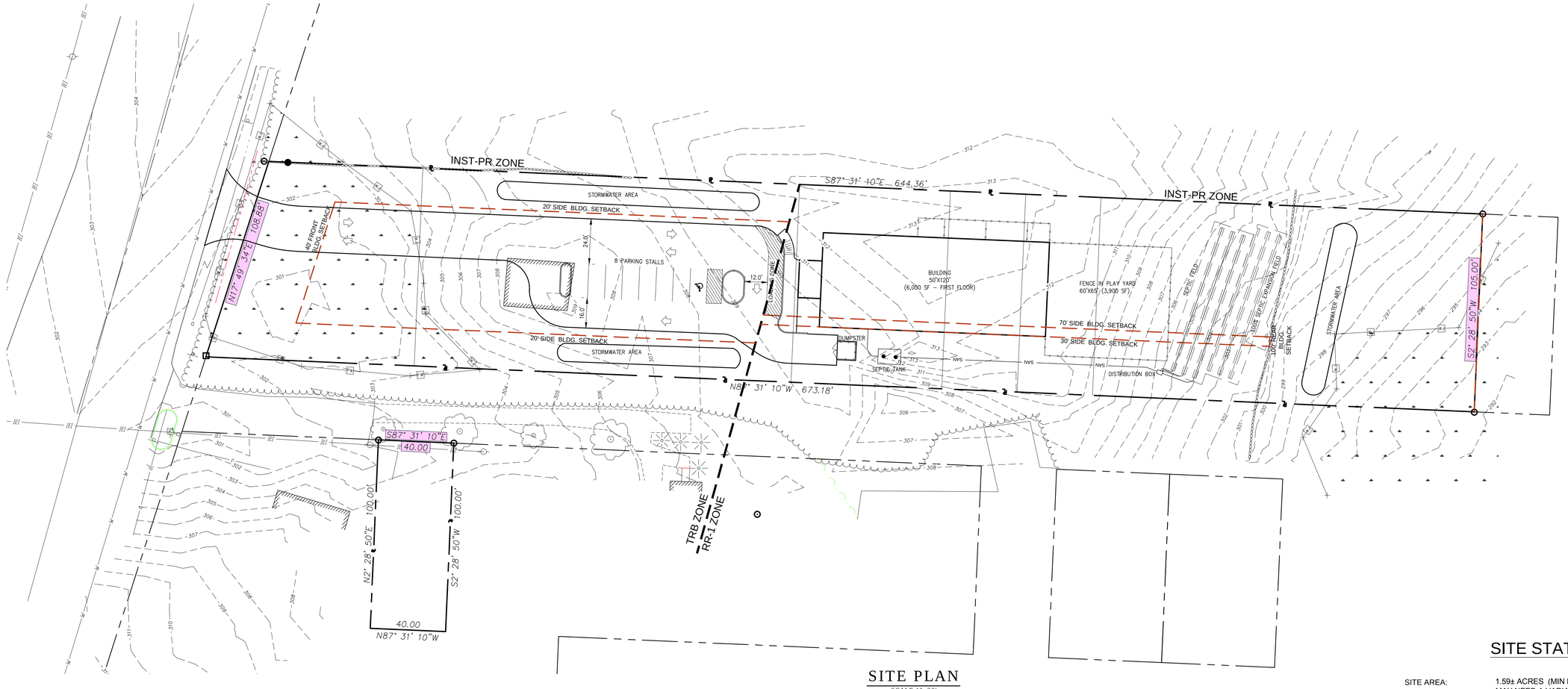

SITE PLAN

SCALE 1"=30'

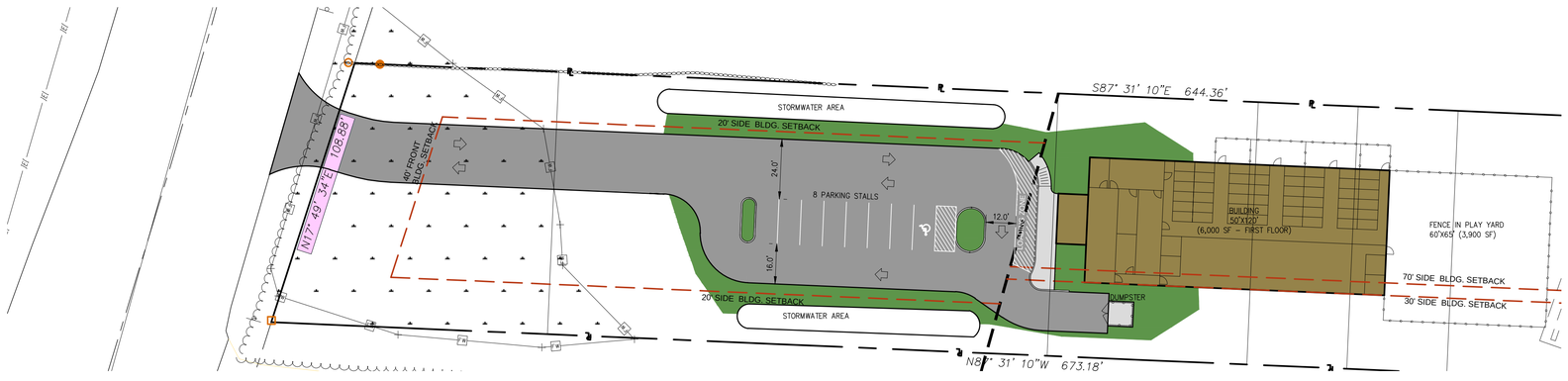

RENDER SITE PLAN

SCALE 1"=30'

SITE STATISTICS

SITE AREA:	1.59± ACRES (MIN LOT SIZE IS 2.0 ACRES OR 10,000 SF MAY NEED A VARIANCE)
EXISTING ZONE:	RR (RURAL RESIDENTIAL DISTRICT) & TRB (TOURIST RELATED BUSINESS)
USE:	ANIMAL CLINIC (PERMIT USE IN RR ZONE)
PARKING:	REQUIRED=8 PROPOSED= 8 SPACES BASED UPON 1 SPACE PER 200 SF OF BLDG. (30X50' OFFICE/RETAIL SPACE= 1500SF/200SF/SPACE=8)
MINIMUM LOT WIDTH:	100' IN TRB (HAVE 105')
SETBACKS BLDG:	FRONT=40' (TRB) SIDE=20' (TRB) REAR= 40' (TRB) SIDE=30' MIN AND TOTAL OF 100' (RR-1) REAR=100' (RR-1)
MAX HT:	35'
GREEN SPACE:	70% REQUIRED (PROPOSED 70%)

PRELIMINARY DRAWINGS: NOT FOR CONSTRUCTION

THE ALTERATION OF THIS MATERIAL IN ANY WAY, UNLESS DONE UNDER THE DIRECTION OF A COMPARABLE PROFESSIONAL, (I.E.) ARCHITECT FOR AN ARCHITECT, ENGINEER FOR AN ENGINEER OR LANDSCAPE ARCHITECT FOR A LANDSCAPE ARCHITECT, IS A VIOLATION OF THE NEW YORK STATE EDUCATION LAW AND/OR REGULATIONS AND IS A CLASS "A" MISDEMEANOR.

SUBMITTAL / REVISIONS

No.	DATE	DESCRIPTION	BY	REVIEWED BY:	DATE

PROJ. MANAGER:	JWE
CHIEF DESIGNER:	JWE
DESIGNED BY:	JWE
DRAWN BY:	JWE
CHECKED BY:	-

SEAL

DRAFT

Engineering and Land Surveying, P.C.
1533 Crescent Road - Clifton Park, NY 12065

MATT SAMES

CONCEPT SITE PLAN #1

ROUTE 9

CITY OF SARATOGA SPRINGS NEW YORK

SCALE:	AS SHOWN
CONTRACT No.:	-
MJ PROJ. No.:	972.15
DATE:	JULY 2016

C-2

SHEET 2 OF 2

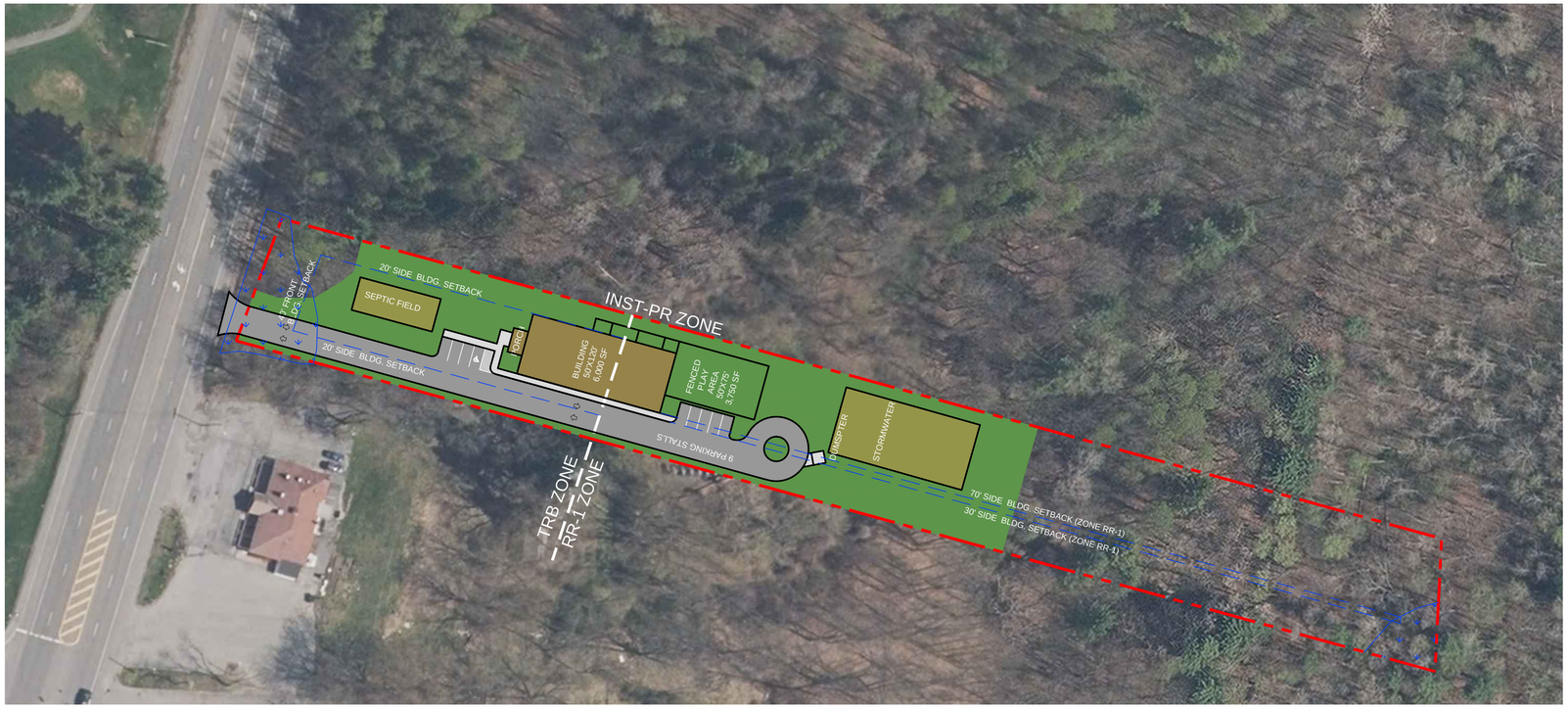

SITE PLAN

SCALE 1"=60'

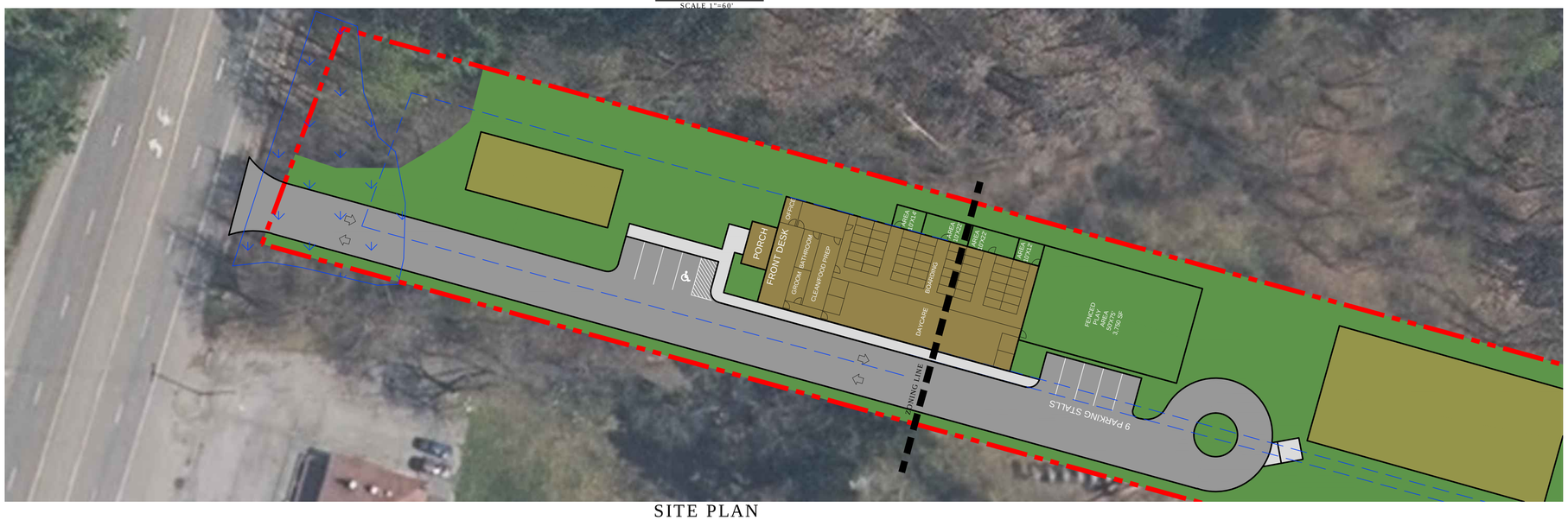

SITE PLAN

SCALE 1"=30'

SITE STATISTICS

SITE AREA:	1.6± ACRES (MIN LOT SIZE IS 2.0 ACRES OR 10,000 SF MAY NEED A VARIANCE)
EXISTING ZONE:	RR (RURAL RESIDENTIAL DISTRICT) & TRB (TOURIST RELATED BUSINESS)
USE:	ANIMAL CLINIC (PERMIT USE IN TRB ZONE)
PARKING:	REQUIRED=8 PROPOSED= 9 SPACES BASED UPON 1 SPACE PER 200 SF OF BLDG. (30X50' OFFICE/RETAIL SPACE= 1500SF/200SF/SPACE=8)
MINIMUM LOT WIDTH:	100' IN TRB (HAVE 105')
SETBACKS BLDG:	FRONT=40' (TRB) SIDE=20' (TRB) REAR= 40' (TRB) SIDE=30' MIN AND TOTAL OF 100' (RR-1) REAR=100' (RR-1)
MAX HT:	35'
GREEN SPACE:	70% REQUIRED (PROPOSED 70%)

WETLANDS

PRELIMINARY DRAWINGS: NOT FOR CONSTRUCTION

THE ALTERATION OF THIS MATERIAL IN ANY WAY, UNLESS DONE UNDER THE DIRECTION OF A COMPARABLE PROFESSIONAL, (I.E.) ARCHITECT FOR AN ARCHITECT, ENGINEER FOR AN ENGINEER OR LANDSCAPE ARCHITECT FOR A LANDSCAPE ARCHITECT, IS A VIOLATION OF THE NEW YORK STATE EDUCATION LAW AND/OR REGULATIONS AND IS A CLASS "A" MISDEMEANOR.

SUBMITTAL / REVISIONS

No.	DATE	DESCRIPTION	BY	REVIEWED BY:	DATE

PROJ. MANAGER:	JWE
CHIEF DESIGNER:	JWE
DESIGNED BY:	JWE
DRAWN BY:	JWE
CHECKED BY:	-

SEAL

DRAFT

Engineering and Land Surveying, P.C.
1533 Crescent Road - Clifton Park, NY 12065

MATT SAMES

CONCEPT SITE PLAN #4

ROUTE 9

CITY OF SARATOGA SPRINGS NEW YORK

SCALE:	AS SHOWN
CONTRACT No.:	-
MJ PROJ. No.:	972.15
DATE:	FEBRUARY 2016

C-1

SHEET 1 OF 1

F:\mj\972\972.15 (Pet Lodge -Saratoga)\concept 4.dwg, 5/18/2016 11:40:35 AM

HARTGEN
archeological associates inc

PHASE I ARCHAEOLOGICAL INVESTIGATION

Pet Lodge

City of Saratoga Springs
Saratoga County, New York

HAA # 5017-21
OPRHP –Not Yet Assigned

Submitted to:
M.J. Engineering and Land Surveying, P.C.
1533 Crescent Road
Clifton Park, NY 12065

Prepared by:
Hartgen Archeological Associates, Inc.

1744 Washington Avenue Ext.
Rensselaer, New York 12144
p [redacted]
f [redacted]
[redacted]

www.hartgen.com

An ACRA Member Firm
www.acra-crm.org

July 2016

MANAGEMENT SUMMARY

SHPO Project Review Number: *Not yet assigned*
Involved State and Federal Agencies: *SEQRA*
Phase of Survey: *Phase I*

LOCATION INFORMATION

Municipality: *City of Saratoga Springs*
County: *Saratoga*

SURVEY AREA

Length: *620 feet (189 m)*
Width: *100 feet (30 m)*
Acres: *1.4 acres*

ARCHEOLOGICAL SURVEY OVERVIEW

Number and Interval of Shovel Tests: *21 shovel tests at 50-ft (15 m) intervals, 8 close-interval shovel tests surrounding foundation; 29 tests total*

RESULTS OF ARCHEOLOGICAL SURVEY

Number and Name of Historic Sites Identified: *One (1); H. Wilson Historic Site*

RECOMMENDATIONS

Avoidance of the site or Phase II Site Evaluations.

Report Authors: *Justin DiVirgilio, Matthew Kirk, Adam Luscier, and Elizabeth Horner*
Date of Report: *July 2016*

ABSTRACT

The Phase I archaeological investigations were completed for the proposed Pet Lodge project, located in the City of Saratoga Springs, in Saratoga County, New York. The Pet Lodge project encompasses 1.4 acres. The investigation identified a small historic site in the mid-western section of the Area of Potential Effects. The site included a dry-laid stone foundation with some modifications, including a poured concrete floor in the cellar and a number of historic artifacts in close-interval shovel tests surrounding the foundation. Potential evidence of associated structures was also observed. Avoidance of the site or Phase II site evaluation is recommended. The client has agreed to avoid the site through filling and the relocation of a proposed septic field.

TABLE *of* CONTENTS

PHASE I CULTURAL RESOURCES SURVEY 1
1 Introduction 1
2 Project Information 1
2.1 Project Location 1
2.2 Description of the Project 1
2.3 Description of the Area of Potential Effects (APE) 1
3 Environmental Background 1
3.1 Present Land Use and Current Conditions 1
3.2 Soils 2
3.3 Bedrock Geology 2
3.4 Physiography and Hydrology 2
4 Documentary Research 2
4.1 Archeological Sites 2
4.2 Historic Properties 3
4.3 Previous Surveys 3
5 Historical Map Review 3
5.1 Map-Documented and Existing Structures 3
6 Archeological Sensitivity Assessment 4
6.1 Precontact Archeological Sensitivity 4
6.2 Historic Archeological Sensitivity 4
7 Archeological Potential 5
8 Archeological Survey 5
8.1 Methodology 5
8.1.1 Shovel Testing 5
8.1.2 Artifacts and Laboratory 5
8.2 Results 5
8.2.1 H. Wilson Historic Archeological Site 6
9 Recommendations 7
10 Bibliography 8

Maps
Photographs
Appendix 1: Shovel Test Records
Appendix 2: Artifact Inventory

Map List

Map 1. Project Location (USGS 2015)
Map 2. Project Map (Esri Inc. 2015)
Map 3. Historical Maps (Geil 1856; United States Geological Survey (USGS) 1949)
Map 4. Historical Map (United States Geological Survey (USGS) 1964)
Map 5. Stone foundation plan view

Photograph List

Photo 1. Densely vegetated central area within the APE
Photo 2. Large metal debris pile, mid-eastern section of the APE.
Photo 3. Dry-laid stone foundation, mid-western section of the APE, brush removed.
Photo 4. Stone foundation and surrounding area, mid-western section of the APE, brush removed.
Photo 5. Eastern section of the APE, less densely wooded.
Photo 6. Wet area, westernmost section of the APE.

Table List

Table 1. Soils in Project 2
Table 2. Archeological sites within 0.5 mile (.8 km) of the Project 2

PHASE I CULTURAL RESOURCES SURVEY

1 Introduction

Hartgen Archeological Associates, Inc. (Hartgen) conducted a Phase I archeological investigation for the proposed Pet Lodge (Project) located in the City of Saratoga Springs, Saratoga County, New York. The Project requires approvals by local planning Board as a Certified Local Government (CLG) and under the New York State Environmental Quality Review Act (SEQR).

This investigation will also be reviewed by the New York State Office of Parks, Recreation and Historic Preservation (OPRHP). The investigation was conducted according to the New York Archaeological Council's *Standards for Cultural Resource Investigations and the Curation of Archaeological Collections* (1994), which are endorsed by OPRHP. This report has been prepared according to OPRHP's *State Historic Preservation Office (SHPO) Phase I Archaeological Report Format Requirements* (2005).

2 Project Information

2.1 Project Location

The Project is located in the City of Saratoga Springs, Saratoga County, New York. It is located along the east side of US Route 9, approximately 300 feet north of the intersection with E. West Road and Merrill Avenue. (Map 1).

2.2 Description of the Project

The proposed Pet Lodge project includes a 6,000 square foot building, a fenced play yard, a storm water management area, a septic field, an access drive, and a parking area.

2.3 Description of the Area of Potential Effects (APE)

The area of potential effects (APE) includes all portions of the property that will be directly altered by the proposed undertaking. The APE encompasses a 1.4-acre area fronting on US Route 9 and measuring roughly 100 feet by 620 feet (30 meters by 189 meters). There is a slight sloping area in the central portion of the APE. The westernmost portion of the Project is wetland.

For the purpose of this study, the Project and APE are considered to be synonymous and the terms are used interchangeably.

3 Environmental Background

The environment of an area is significant for determining the sensitivity of the Project for archeological resources. Precontact and historic groups often favored level, well-drained areas near wetlands and waterways. Therefore, topography, proximity to wetlands, and soils are examined to determine if there are landforms in the Project Area that are more likely to contain archeological resources. In addition, bedrock formations may contain chert or other resources that may have been quarried by precontact groups. Soil conditions can provide a clue to past climatic conditions, as well as changes in local hydrology.

3.1 Present Land Use and Current Conditions

The APE is a currently a densely vegetated wooded area off of US Route 9. It is located to the north of a restaurant and a residence with an associated driveway is situated immediately south of the Project. The area north of the Project is wooded and undeveloped as well. There is some evidence of soil disturbance along US Route 9. Within the Project there is a dry-laid stone foundation in the mid-western portion of the APE (Photographs 3 and 4). This is near a wet area in the western segment. The mid-eastern portion of the Project

contains an area of large metal debris. (Photograph 2). East of that, the forest thins and the brush is not as thick (Photograph 5).

3.2 Soils

The soils in the APE are derived from glacial lake parent materials and are not expected to contain deeply buried cultural deposits. The soils are well-drained, are classified as prime farmland, and would generally be considered favorable for human habitation.

Table 1. Soils in Project

Symbol	Name	Depth	Textures	Slope	Drainage	Landform
ClB	Claverack loamy fine sand	0-20 cm (0-8 in) 20-56 cm (8-22 in)	• Very dark grayish brown loamy fine sand • Yellowish brown loamy fine sand	3-8%	Moderately well drained	Glacial lake plains

3.3 Bedrock Geology

According to the Geologic Map of New York, the underlying bedrock in this area is part of the Lorraine, Trenton, and Black River Groups consisting of Middle Ordovician Canajoharie Shale (Fisher, et al. 1970). A surface reconnaissance of the project area revealed no evidence of bedrock outcrops.

3.4 Physiography and Hydrology

Steeply sloped areas are considered largely unsuitable for human occupation. As such, the standards for archeological fieldwork in New York State generally exclude areas with a slope in excess of 12% from archeological testing (NYAC 1994). Exceptions to this rule include steep areas with bedrock outcrops, overhangs, and large boulders that may have been used by precontact people as quarries or rock-shelters. Such areas may still warrant a systematic field examination.

4 Documentary Research

Hartgen conducted research using the New York State Cultural Resource Information System (CRIS), which is maintained by the New York SHPO and the Division for Historic Preservation DHP within OPRHP. CRIS contains a comprehensive inventory of archeological sites, State and National Register (NR) properties, properties determined eligible for the NR (NRE), and previous cultural resource surveys.

4.1 Archeological Sites

An examination of CRIS identified four reported archeological sites within 0.5 miles (0.8 km) of the Project (Table 2). Previously reported archeological sites provide an overview of both the types of sites that may be present in the Project and relation of sites throughout the surrounding region. The presence of few reported sites, however, may result from a lack of previous systematic survey and does not necessarily indicate a decreased archeological sensitivity within the Project.

Table 2. Archeological sites within 0.5 mile (.8 km) of the Project

OPRHP Site No.	NYSM Site No.	Site Identifier	Description	Proximity to Project
09140.001522	This site is from update	J. Rouse Historic Site	Mid-19th century historic house site	1,700 feet north
	4734		Precontact camp site	2,500 feet southeast
	6907		Precontact camp site	Includes APE
001437			Transitional period site with Orient Fishtail point, FCR, stone tools, and over 100 flakes	2,100 feet northeast

4.2 Historic Properties

An examination of CRIS identified no NR properties, no NRE properties, no properties previously determined to be ineligible, and no properties of undetermined status within the Project.

4.3 Previous Surveys

A review of CRIS identified 3 previous surveys within the immediate vicinity of the Project (Table).

Table 3 Relevant previous surveys within or adjacent to the Project

Project/Phase	Summary	Citation
Phase 1A//1B for Proposed High Rock Golf Course, Saratoga Springs, Saratoga County, NY	Phase IA Literature Review and Report for Archaeological Potential and Phase IB Archaeological Field Reconnaissance In December 1998-January 1999 a large prehistoric site was discovered, encompassing 4 loci over 4.5 acres. A Phase II survey was recommended. No significant historic deposits were found.	(Hartgen Archeological Associates 1999a)
Phase II for Proposed High Rock Golf Course, Saratoga Springs, Saratoga County NY	Phase II Site Evaluation for High Rock prehistoric site After a Phase II survey of the property a 0.17 acre loci was deemed National Register eligible. Avoidance or Phase III excavations were recommended.	(Hartgen Archeological Associates 1999b)
Phase IA Literature Review, Saratoga Springs, Saratoga County, NY	Archaeological Management Plan, based on a literature review covering the entirety of Saratoga Springs, NY. As of the compilation of this report, 64 sites had been reported to NYSM or OPRHP. Of these, 42 were precontact and 15 were historic.	(Hartgen Archeological Associates 2005)

The western section of the Phase IA/IB for Proposed High Rock Golf Course extended just north of this Project and may slightly overlap the APE. No evidence of the H. Wilson site was found during that survey, although it was thought to be within that Project, indicating it could be located within the current APE. No significant historical deposits directly within this area were documented in these surveys, but one prehistoric loci nearby was deemed National Register Eligible.

5 Historical Map Review

The 1856 Geil map shows the early residential structures in the area. This map places the Project near a structure labelled "H. Wilson," which could have been located within the APE (Map 3). By this time, most of the roads that exist near the APE today (including US Route 9, Kaydeross Ave. W, and Columbia Ave.) had already been established, although it appears that Kaydeross Ave. W has been reconfigured (Map 1)

A 1942 USGS map (Map 3) shows the APE immediately south of the Saratoga Spa State Park, designated a National Register Historic District (90NR02846) in 1987, that extends to the west and north. A structure and what may be its outbuilding are visible in the vicinity of the Project. By this time the roads have been reconfigured, reflecting the layout that exists today.

A 1964 historic aerial photograph (Map 4) shows a cleared lot with a dividing tree line containing two possibly structures within the APE. As discussed below, the westernmost structure (in this photo may only be the remnants) is associated with a stone foundation and cellar hole. The eastern structure is likely a barn or outbuilding. There was no evidence of a foundation in the fieldwork for this building.

5.1 Map-Documented and Existing Structures

Each past or current structure within the Project is assigned a unique structure number. Map-documented structures—those structures that are depicted on one or more maps—are distinguished using the abbreviation "MDS" after the structure number (e.g. Structure 3 (MDS)).

Table 4. Summary of map-documented and existing structures within the Project

Structure #	Map 4. Historical Map	Map 5. Stone foundation plan	Error! Reference source	Extant (Year)
1		x	x	Unknown
2			x	Unknown

6 Archeological Sensitivity Assessment

The New York Archaeological Council provides the following description of archeological sensitivity:

> Archaeologically sensitive areas contain one or more variables that make them likely locations for evidence of past human activities. Sensitive areas can include places near known prehistoric sites that share the same valley or that occupy a similar landform (e.g., terrace above a river), areas where historic maps or photographs show that a building once stood but is now gone as well as the areas within the former yards around such structures, an environmental setting similar to settings that tend to contain cultural resources, and locations where Native Americans and published sources note sacred places, such as cemeteries or spots of spiritual importance (NYAC 1994:9).

The city-wide Phase IA Literature Review (Hartgen Archeological Associates 2005) identified 64 archaeological sites within the Saratoga Springs area. Of these, 42 were precontact sites and 15 were historic sites. One of the 64 sites had both prehistoric as well as historic components, and six sites were undetermined based on site files. Most of the precontact sites in Saratoga Springs, NY are clustered around Saratoga Lake. Many of the historic sites are within the urban core, though residences existed south of this along Route 9 as well. The maps show five historic districts listed on the National Register of Historic Places, one of which extends immediately north of the Project.

6.1 Precontact Archeological Sensitivity

The precontact sensitivity of an area is based on proximity to previously documented precontact archeological sites, known precontact resources (e.g. chert outcrops), and physiographic characteristics such as topography and drainage. Generally, areas in the vicinity of streams and wetlands are considered to have elevated sensitivity for sites associated with Native American use or occupation because they presented potential food and water sources as well as transportation corridors.

The precontact sensitivity for this site is low to moderate. The western portion of the APE is a wet area, with more wet areas outside the APE to the east. The central portion slopes up toward the north. The Project is northwest of Kayaderosseras Creek, and Saratoga Lake is located to the southeast. Generally, low-lying wet areas have lower sensitivity for precontact sites than do higher, dry areas.

6.2 Historic Archeological Sensitivity

The historic sensitivity of an area is based primarily on proximity to previously documented historic archeological sites, map-documented structures, or other documented historical activities (e.g. battlefields).

The historic archeological sensitivity for the APE is moderate. Several historical maps were consulted for this report. The Project is located directly south of a designated National Register Historic District (90NR02846) that extends to the west and north (Map 3). The Geil map shows historic occupation in the immediate area as early as 1856 (Map 3). The 1964 (United States Geological Survey (USGS) 1964) image shows evidence of two structures located in the mid-western part of the Area of Potential Effects.

7 Archeological Potential

Archeological potential is the likelihood of locating intact archeological remains within an area. The consideration of archeological potential takes into account subsequent uses of an area and the impact those uses would likely have on archeological remains.

The proposed Pet Lodge project appears to be in a slightly disturbed area as indicated by shovel testing and two separate debris piles in the central section and in the mid-eastern section of the Project. The gradual slope in the central section appears to be part of the natural landscape. The western section contains a largely intact dry laid stone foundation. There is an area of disturbance to the south of the Project containing a restaurant, a parking lot, and a house with associated driveway. For the APE, the archeological potential is moderate due to the later historic disturbance.

8 Archeological Survey

Twenty (20) shovel tests were excavated from the east to west across the APE at standard 15 meter (50-ft) intervals (Map 2). This identified a fieldstone foundation. Thereafter, eight (8) close-interval tests were placed around the foundation approximately 5 meters(16 ft) part with one located inside the structure (Map 5). The westernmost section of the APE was not excavated due to the presence of a wetland area.

8.1 Methodology

8.1.1 Shovel Testing

Shovel tests were excavated at a standard interval of 15 meters (50 ft). Tests were excavated at a reduced interval of 7.5 meters (25 ft) within known archeological sites and within the suspected yard areas of extant structures and MDSs at least 50 years old. Confirmation shovel tests were excavated at reduced intervals in the vicinity of archeological finds to assess their significance.

Each shovel test was 40 centimeters (16 in) in diameter. All excavated soil was passed through 0.25-inch hardware mesh and examined for both precontact (Native American) and historic artifacts. The stratigraphy of each test was recorded including the depth, Munsell color, soil description, and artifact content (Munsell Color 2000). The location of each shovel test was plotted on the project map. Test excavation was photographed.

8.1.2 Artifacts and Laboratory

All precontact (Native American) cultural material identified during the fieldwork was collected. Significant historic artifacts such as glass, ceramics, food remains, hardware, and miscellaneous items were collected. Coal, ash, cinder, brick, and modern materials were noted. Artifacts collected were placed in paper or plastic bags labeled by provenience and inventoried in a bag list. Bags were numbered in the field and transported to the Hartgen laboratory in the Town of North Greenbush, Rensselaer County, New York, for processing.

Shovel test records and other provenience information were entered into a Microsoft *Access* database (Appendix 1). Artifacts were cleaned and cataloged. Cataloging entailed entering artifact provenience information, counts, weights, and descriptive information into the database (Appendix 2).

8.2 Results

The Phase IB archeological field reconnaissance was conducted on June 17, 2016. The field crew consisted of Elizabeth Horner. Adam Luscier, John Ham, and Kelli Smith. The fieldwork involved excavation of 29 shovel tests. Twenty one (21) initial shovel tests were distributed throughout the APE at even 15 m (50 ft) intervals. Most of these were negative, except for STPs 4, 10, and 15 that contained modern materials that were not collected.

The stone foundation was covered by thick brush that was cleared in order to excavate additional tests. Eight (8) shovel tests were placed at close intervals around the foundation, which produced various historic artifacts.

Ceramic fragments included creamware, redware, whiteware, pearlware and architectural materials included window glass, bricks, brick fragments and cut nails. Vessel glass and cut faunal bone were also recovered. A sample of artifacts was also collected from within the cellar hole. This included a stoneware pot, two glass bottles, a glass Noxzema jar, a metal container, and one brick. The assemblage from the cellar dates suggests that the site was abandoned by the 1950s.

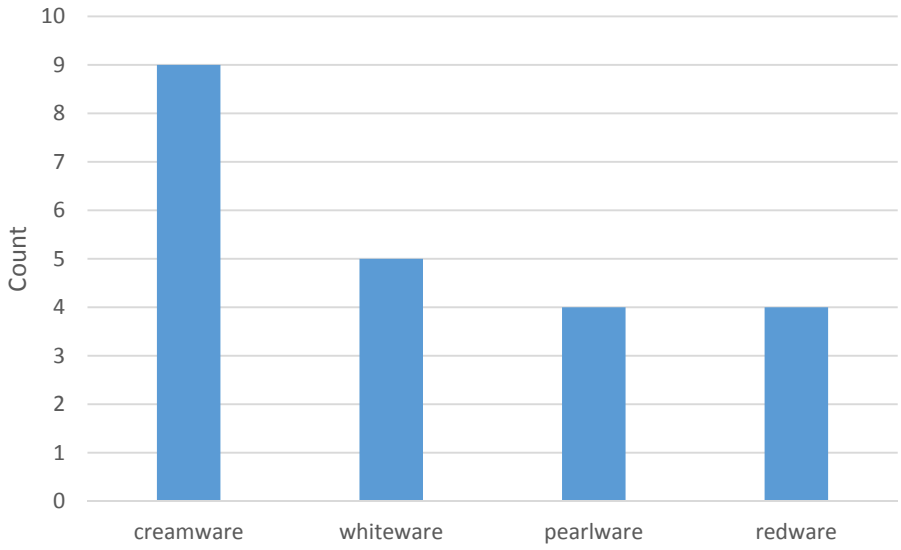

Figure 1. Incidence of Ceramic Types from H. Wilson Archaeological Site

The foundation measured 8 by 11.6 meters (26 by 38 ft) and was made of dry-laid fieldstone. The cellar hole was 104 cm (3 ft 5 in) in the northwest corner and 97 cm (3 ft 2 in) along the western wall. This depth is indicative of a full basement.

There is a bulkhead entrance at the northeast corner of the foundation where stairs into the basement would have been located. Typically the kitchen is located above the bulkhead entrance. A brick deposit on the north side of the foundation suggest the location of the chimney.

Tests 1-20 encountered a typical soil profile that included topsoil-subsoil horizons, with a silty-sandy-loam topsoil 15 to 35 cm (6 to 13.8 in) thick underlain by a silty-sand subsoil. The topsoil was slightly shallower in the northern central portions of the Project. Several areas of disturbance noted on the surface and scattered throughout the west half of APE.

Tests surrounding the foundation (STPs 21-28) encountered fills associated with the construction and demolition of this structure. These included a silty-sand topsoil 22 to 38 cm (8.7 to 15 in) thick underlain with a silty sand or sandy clay subsoil. Overall the tests reached an average depth of 41 cm (16 in) below the surface.

8.2.1 H. Wilson Historic Archeological Site

The site produced a large number of building materials, including brick concentrations in tests north and east of the foundation and 109 nails from the test in the cellar hole. Most were cut nails with machine made heads, indicative of a 19th-century construction date. Ceramics found in tests surrounding the foundation also correlates with a 19th-century occupation of the structure.

Map 4 is a 1964 aerial that shows the outline of the foundation post-abandonment, the superstructure appears to be gone, with an outbuilding northeast of the foundation (United States Geological Survey (USGS) 1964) Based on the aerial, the shovel tests and the topography shown in Map 2, it is estimated that the H. Wilson Archeological Site encompasses around ±907 square meters (9,765 ft^2) (Map 2).

Table 5. Summary of H. Wilson Archeological Site

Characteristic	**Site information**
Site Name	Pet Lodge Site 1
Description	Historic dry-laid stone foundation and associated artifacts
Date	unknown
Function	Residence
Size	±907 square meters (9,765 ft^2)
Location	NAD 83, UTM Zone 18T, 59865.10 Easting, 4766689.54Northing

9 Recommendations

The Phase IB reconnaissance identified a large number of historic artifacts surrounding a dry-laid stone foundation in the western section of the Project. Avoidance of the site or Phase II site evaluation is recommended in the area.

The client has proposed avoidance by placing 4 feet of fill over the site and relocating a septic field outside of the site area. If this can be accomplished no additional archeological work is recommended.

Bibliography

Esri Inc.
2015 World Imagery. Esri, Inc., Redlands, California, http://services.arcgisonline.com/ArcGIS/rest/services/World_Topo_Map/MapServer.

Fisher, Donald W., Yngvar W. Isachsen and Lawrence V. Rickard
1970 *Geologic Map of New York*. Map and Chart Series No. 15. New York State Education Department, Geological Survey, Albany, New York.

Geil, Samuel
1856 *Map of Saratoga County, New York from Actual Survey*. E.A. Balch Publisher, Philadelphia.

Hartgen Archeological Associates, Inc.
1999a *Phase IA Literature Review & Report for Archeological Potential, Phase IB Archeological Field Reconnaissance, Proposed High Rock Golf Course, City of Saratoga Springs, Saratoga County, New York*. Submitted to The LA Group. On file at HAA, Renssealer, NY.

1999b *Phase II Site Evaluation, Proposed High Rock Golf Course, City of Saratoga Springs, Saratoga County, New York*. Submitted to The LA Group. On file at HAA, Renssealer, NY.

2005 *Phase IA Literature Review, City of Saratoga Springs, Archeological Management Plan, Saratoga County, New York, HAA 3525*. Submitted to The City of Saratoga Springs. On file at HAA, Renssealer, NY.

Munsell Color
2000 *Munsell Soil Color Charts*. GretagMacbeth, New Windsor, New York.

New York Archaeological Council (NYAC)
1994 *Standards for Cultural Resource Investigations and the Curation of Archaeological Collections in New York State*. NYAC, n.p.

Office of Parks, Recreation and Historic Preservation (OPRHP)
2005 *New York State Historic Preservation Office (SHPO) Phase I Archaeological Report Requirements*. OPRHP, Waterford, New York.

United States Geological Survey (USGS)
1949 *Saratoga, 15-Minute Topographic Quadrangle*. U.S. Government Printing Office, Washington D.C.

1964 *Aerial Single Frame Photo, AR1VAYU00010080*. USGS Earth Resources Observations and Science Center (EROS), Sioux Falls, South Dakota, http://earthexplorer.usgs.gov.

2015 USGS The National Map Topo Base Map - Large Scale. USGSTopo (MapServer), The National Map Seamless Server, USGS, Sioux Falls, South Dakota, http://services.nationalmap.gov/arcgis/rest/services/USGSTopoLarge/MapServer.

Maps

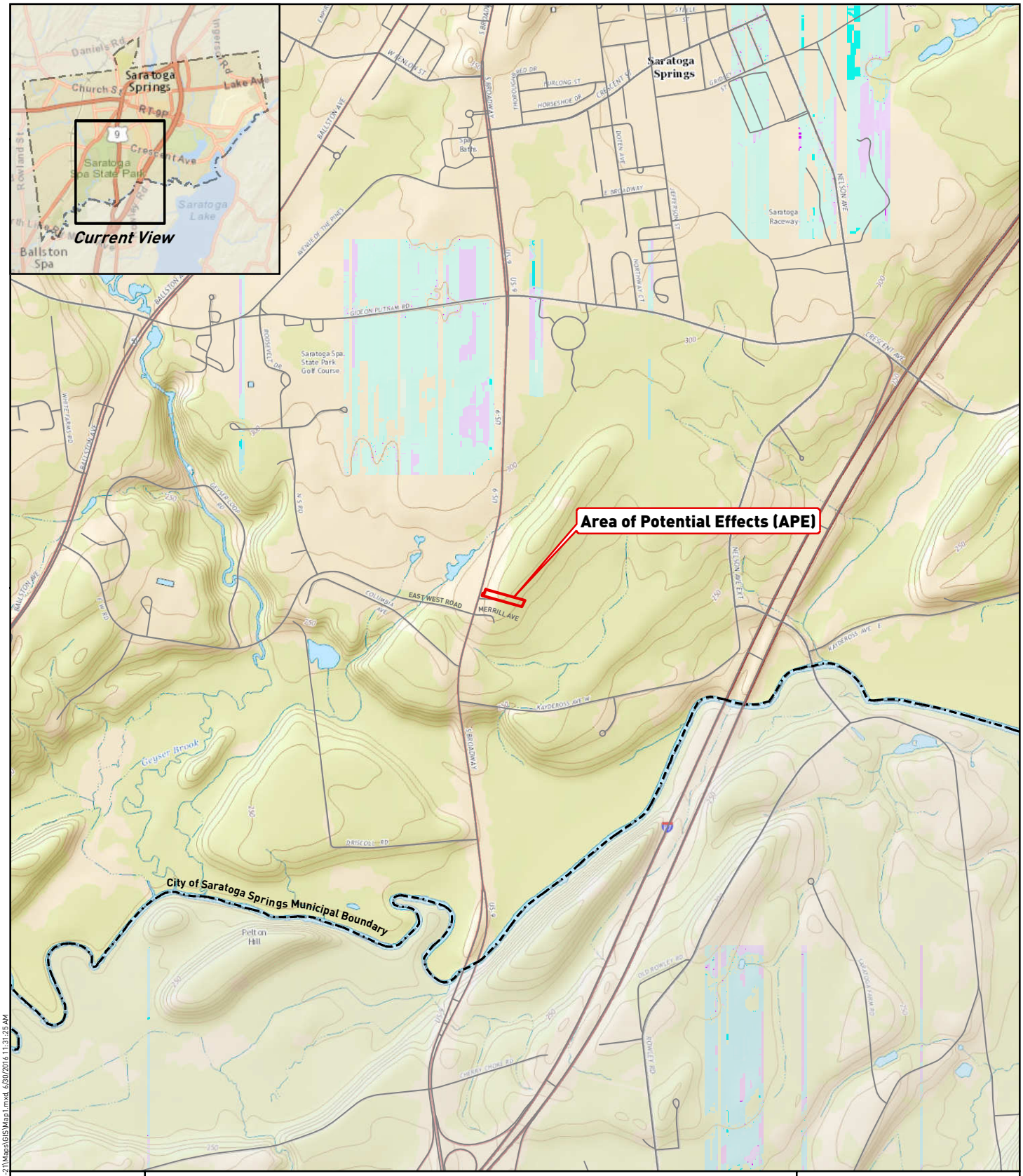

N

1,000 0 1,000 2,000 Feet

300 0 300 600 Meters

Note: Contour interval is 10 feet.

Project Location (USGS 2016)

HARTGEN archeological associates inc

Map 1

R:\Active Projects\5017 Pet Lodge\5017-21\Maps\GIS\Map1.mxd, 6/30/2016 11:31:25 AM

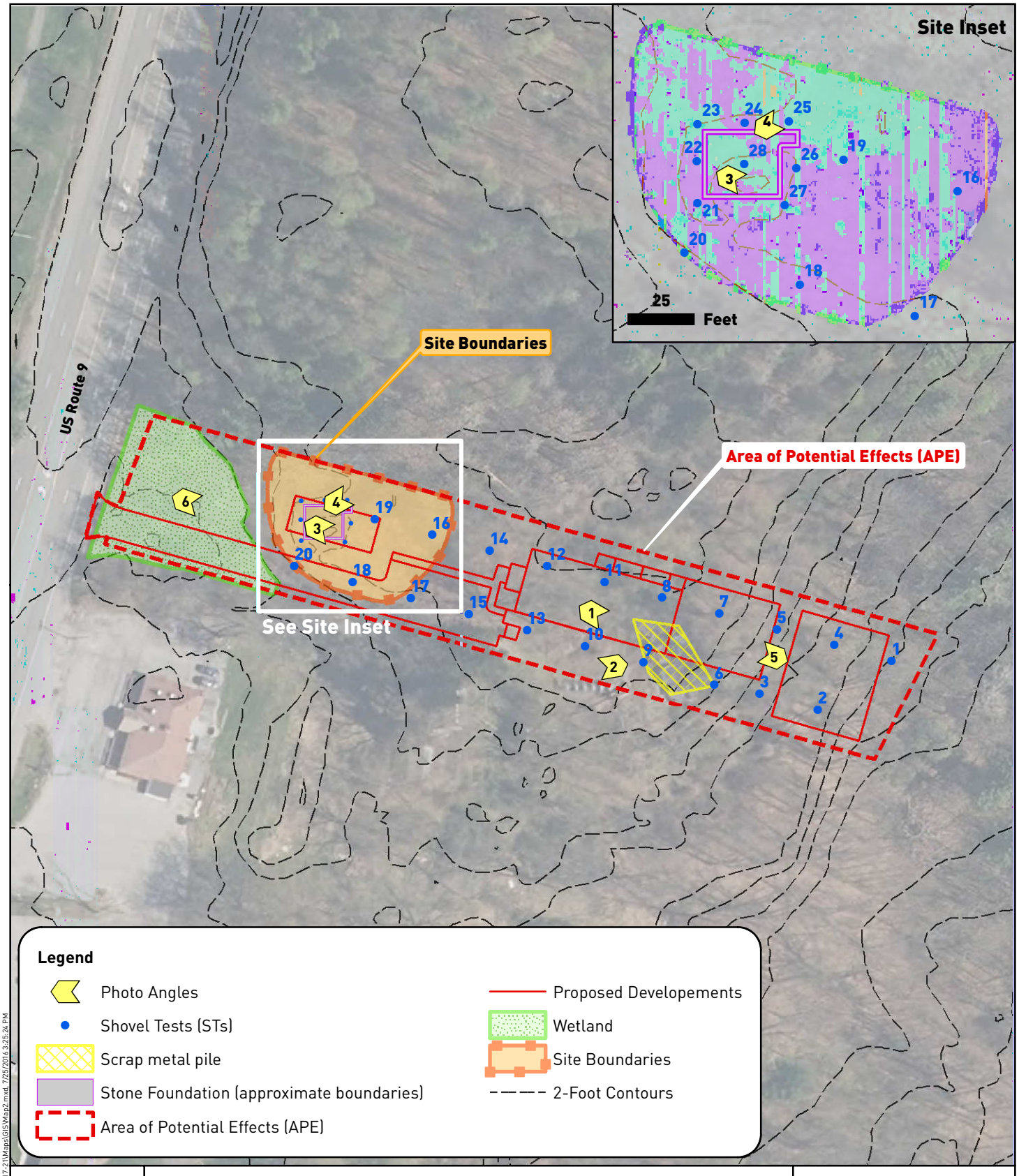

Project Map
(Hartgen 2016; NYSITS 2014)

HARTGEN
archeological associates inc

Map 2

R:\Active Projects\5017 Pet Lodge\5017-21\Maps\GIS\Map2.mxd, 7/25/2016 3:25:24 PM

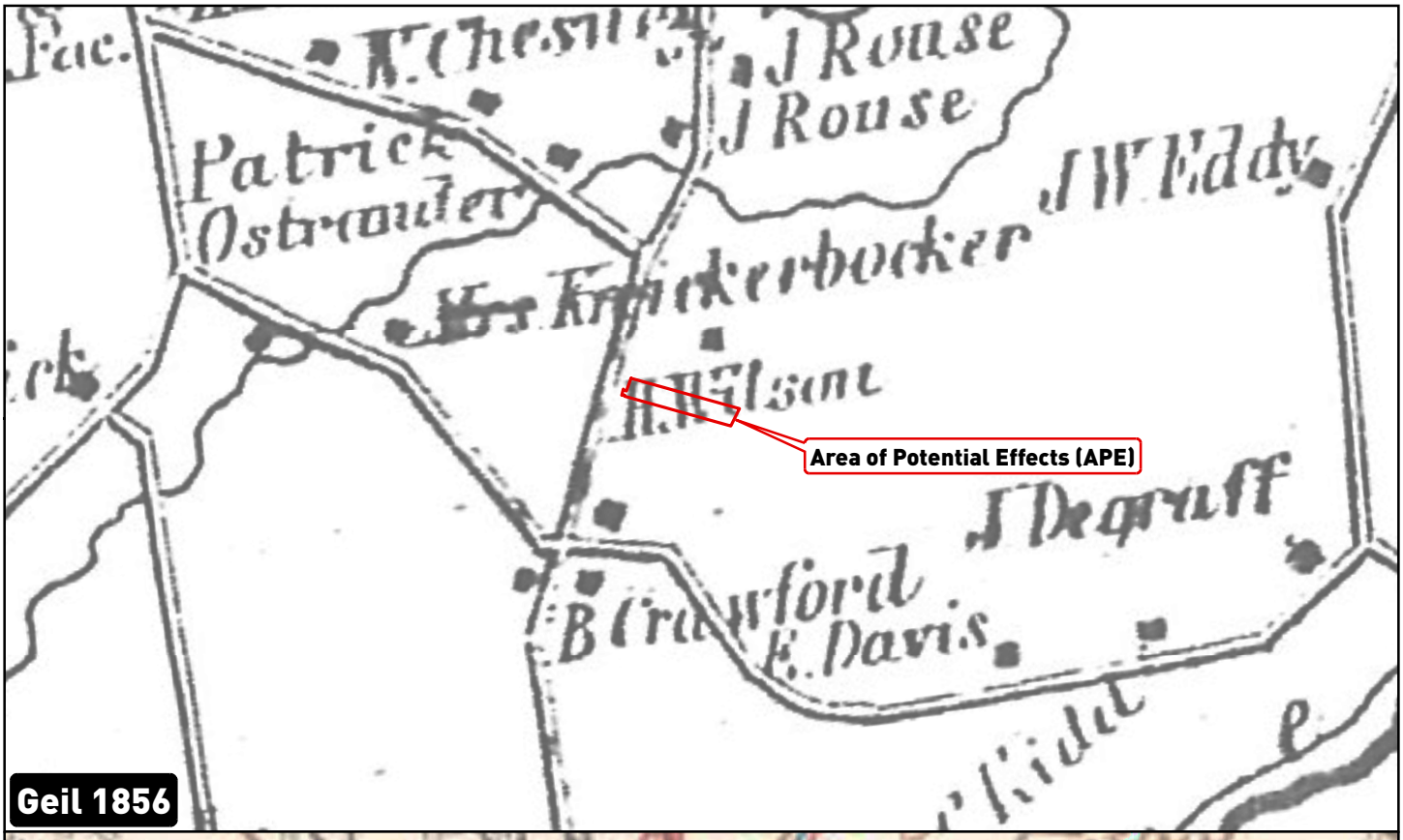

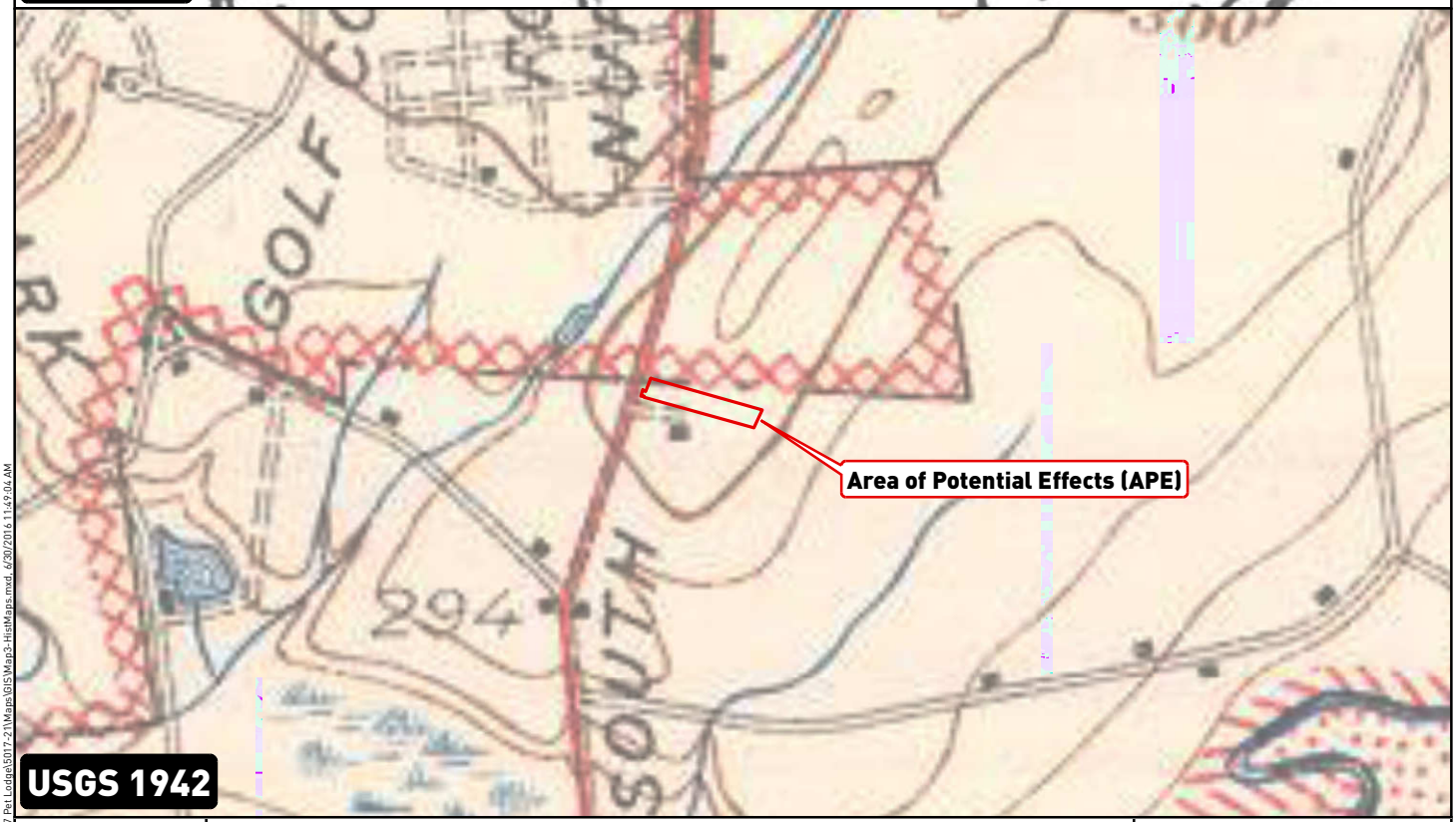

500 0 500 1,000 Feet

150 0 150 300 Meters

Note: Contour interval is 20 feet.

Historical Maps
(Geil 1856, USGS 1942)

HARTGEN archeological associates inc

Map 3

\\haa-sbs\company\Active Projects\5017 Pet Lodge\5017-21\Maps\GIS\Map3-HistMaps.mxd 6/30/2016 11:49:04 AM

N

50 0 50 100
Feet

15 0 15 30
Meters

USGS 1964

HARTGEN
archeological associates inc

Map 4

R:\Active Projects\5017 Pet Lodge\5017-21\Maps\GIS\Map4 - 1964.mxd, 7/21/2016 1:17:14 PM

Photographs

Photo 1. Densely vegetated central area within the APE

Photo 2. Large metal debris pile, mid-eastern section of the APE.

Photo 3. Dry-laid stone foundation, mid-western section of the APE, brush removed.

Photo 4. Stone foundation and surrounding area, mid-western section of the APE, brush removed.

Photo 5. Eastern section of the APE, less densely wooded.

Photo 6. Wet area, westernmost section of the APE.

Appendix 1: Shovel Test Records

501721: Phase IB Archeological Investigation, Pet Lodge

Shovel Test Records

	Ending Depth (cm)	Level	Soil Type	Soil Inclusions	Munsell Color		Termination Reason
1	33	1	sand loam	gravel, roots	2.5y 3/2	very dark grayish brown	
	50	2	sand clay	cobbles	2.5y 4/4	olive brown	subsoil
2	38	1	sand loam	cobbles, roots	10yr 3/2	very dark grayish brown	
	53	2	sand clay	cobbles, roots	10yr 4/6	dark yellowish brown	subsoil
3	35	1	sand loam	roots	10yr 3/2	very dark grayish brown	
	52	2	sand clay	roots	10yr 4/6	dark yellowish brown	subsoil
4	12	1	silt sand	gravel	10yr 3/2	very dark grayish brown	
					10yr 4/6	dark yellowish brown	
	35	2	sand loam	roots	10yr 4/6	dark yellowish brown	subsoil
5	27	1	silt sand	roots	10yr 3/2	very dark grayish brown	
	44	2	silt sand	roots	10yr 4/6	dark yellowish brown	subsoil
6	35	1	silt sand	roots	10yr 3/3	dark brown	
	52	2	silt sand	gravel, cobbles	10yr 4/6	dark yellowish brown	subsoil
7	35	1	silt sand	roots	10yr 3/3	dark brown	other (Disturbed soils)
					10yr 4/6	dark yellowish brown	
8	15	1	silt sand	roots	10yr 3/3	dark brown	
	31	2	silt sand		10yr 4/6	dark yellowish brown	subsoil
9	10	1	silt sand		10yr 3/3	dark brown	
					10yr 4/6	dark yellowish brown	
	33	2	silt sand		10yr 4/6	dark yellowish brown	subsoil
10	28	1	silt sand	roots	10yr 3/3	dark brown	
	44	2	silt sand	cobbles	10yr 4/6	dark yellowish brown	subsoil

Shovel Test Records

	Ending Depth (cm)	Level	Soil Type	Soil Inclusions	Munsell Color		Termination Reason
11	34	1	silt sand	roots	10yr 3/3	dark brown	impasse (roots)
12	19	1	silt sand loam	cobbles, roots	10yr 3/2	very dark grayish brown	
	35	2	sand loam	cobbles, roots	10yr 4/6	dark yellowish brown	subsoil
13	35	1	silt sand	roots	10yr 3/2	very dark grayish brown	
	50	2	sand loam	roots	10yr 4/4	dark yellowish brown	subsoil
14	28	1	silt sand	roots	10yr 3/3	dark brown	
	44	2	silt sand		10yr 4/6	dark yellowish brown	subsoil
15	32	1	silt sand	gravel, crushed stone, roots	10yr 3/3	dark brown	
	48	2	silt sand	gravel, roots	10yr 4/6	dark yellowish brown	subsoil
16	31	1	silt sand loam	roots	10yr 3/2	very dark grayish brown	
	45	2	sand loam	roots	10yr 4/4	dark yellowish brown	subsoil
17	24	1	silt sand	cobbles, roots	10yr 3/3	dark brown	impasse (rocks)
18	28	1	silt sand	roots	10yr 3/3	dark brown	
	43	2	silt sand	cobbles, roots	10yr 4/6	dark yellowish brown	subsoil
19	26	1	silt sand loam	roots	10yr 3/3	dark brown	
	43	2	silt sand	gravel, roots	10yr 4/6	dark yellowish brown	subsoil
20	27	1	silt sand loam	roots	10yr 3/2	very dark grayish brown	
	42	2	silt sand	cobbles, roots	10yr 4/6	dark yellowish brown	subsoil
21	27	1	silt sand	roots	10yr 3/2	very dark grayish brown	
	44	2	silt sand	roots	10yr 4/6	dark yellowish brown	subsoil

501721: Phase IB Archeological Investigation, Pet Lodge

Shovel Test Records

	Ending Depth (cm)	Level	Soil Type	Soil Inclusions	Munsell Color		Termination Reason
22	12	1	silt sand	gravel	10yr 3/2	very dark grayish brown	
					10yr 4/6	dark yellowish brown	
	35	2	sand loam	roots	10yr 4/6	dark yellowish brown	
	50	3	sand		10yr 5/6	yellowish brown	subsoil
23	35	1	sand loam	roots	10yr 3/2	very dark grayish brown	
	52	2	sand clay	roots	10yr 4/6	dark yellowish brown	subsoil
24	35	1	silt sand	roots	10yr 3/3	dark brown	other (Disturbed soils)
					10yr 4/6	dark yellowish brown	
25	38	1	sand loam	cobbles, roots	10yr 3/2	very dark grayish brown	
	53	2	sand clay	cobbles, roots	10yr 4/6	dark yellowish brown	subsoil
26	33	1	sand loam	gravel, roots	2.5y 3/2	very dark grayish brown	
	50	2	sand clay	cobbles	2.5y 4/4	olive brown	subsoil
27	34	1	silt sand	roots	10yr 3/3	dark brown	impasse (roots)
	33	2	silt sand		10yr 4/6	dark yellowish brown	subsoil
28	22	1	sand		10yr 3/3	dark brown	
	31	2	silt sand		10yr 4/6	dark yellowish brown	subsoil

Appendix 2: Artifact Inventory

Phase IB Archeological Investigation, Pet Lodge

Artifact Inventory, HAA# 5017-21

Provenience	Level	Feature	Bag	Item	Count	Artifact Description	Material	Weight (g)
from cellar								
GP			12	1	1	buff/pink bodied stoneware	stoneware	1,544.5
GP			12	2	2	bottle	glass	1,250.0
GP			12	3	1	jar	glass	230.6
GP			12	4	1	container	iron alloy	38.7
GP			12	5	1	brick	brick	859.6
STP 21	1		1	1	2	creamware	refined earthenware	1.8
STP 21	1		1	2	5	linoleum	composite	12.9
STP 21	1		1	3	1	brick	brick	2.3
STP 21	2		2	1	2	redware	coarse earthenware	0.8
STP 21	2		2	2	3	creamware	refined earthenware	2.7
STP 21	2		2	3	3	creamware	refined earthenware	2.7
STP 21	2		2	4	2	pearlware	refined earthenware	5.0
STP 21	2		2	5	2	whiteware	refined earthenware	0.6
STP 21	2		2	6	3	window	glass	1.0
STP 22	1		3	1	1	creamware	refined earthenware	1.2
STP 22	1		3	2	2	vessel	glass	1.0
STP 22	1		3	3	1	window	glass	0.4
STP 22	1		3	4	3	linoleum	composite	21.8
STP 22	1		3	5	2	brick	brick	2.5
STP 22	2		4	1	1	bottle	glass	8.2
STP 22	2		4	2	6	window	glass	8.2

Phase IB Archeological Investigation, Pet Lodge

Artifact Inventory, HAA# 5017-21

Provenience	Level	Feature	Bag	Item	Count	Artifact Description	Material	Weight (g)
STP 22	2		4	3	1	nail	iron alloy	7.3
STP 22	3		11	1	2	pearlware	refined earthenware	1.7
STP 22	3		11	2	1	vessel	glass	1.9
STP 22	3		11	3	4	window	glass	1.9
STP 22	3		11	4	3	brick	brick	204.0
STP 22	3		11	5	1	mineral sample	quartzite	107.3
STP 22	3		11	6	1	mortar	mortar	0.5
STP 22	3		11	7	1	unidentified	ceramic	0.1
STP 22	3		11	8	1	nail	iron alloy	10.7
STP 23	1		6	1	1	whiteware	refined earthenware	0.1
STP 23	1		6	2	1	window	glass	0.4
STP 23	1		6	3	1	tile	unidentified	0.7
STP 23	1		6	4	1	mineral sample	unidentified stone	2.4
STP 23	1		6	5	1	nail	iron alloy	5.4
STP 23	2		7	1	6	window	glass	4.3
STP 23	2		7	2	1	mineral sample	unidentified stone	1.7
STP 23	2		7	3	3	brick	brick	31.4
STP 24	1		5	1	1	whiteware	refined earthenware	0.3
STP 24	1		5	2	8	unidentified	glass	44.4
STP 24	1		5	3	1	unidentified	copper alloy	0.7
STP 24	1		5	4	1	mortar	mortar	16.4
STP 24	1		5	5	9	tile	asbestos	81.8

Phase IB Archeological Investigation, Pet Lodge

Artifact Inventory, HAA# 5017-21

Provenience	Level	Feature	Bag	Item	Count	Artifact Description	Material	Weight (g)
STP 25	1		8	1	1	mineral sample	unidentified stone	23.3
STP 25	1		8	2	1	redware	coarse earthenware	3.2
STP 25	1		8	3	1	mineral sample	unidentified stone	21.1
STP 25	1		8	4	1	faunal bone	bone	35.7
STP 25	1		8	5	1	shell	shell	0.8
STP 27	1		9	1	1	whiteware	refined earthenware	1.4
STP 27	1		9	2	1	redware	coarse earthenware	0.5
STP 27	1		9	3	3	window	glass	2.1
STP 27	1		9	4	22	nail	iron alloy	50.6
STP 27	1		9	5	6	unidentified	iron alloy	10.7
STP 27	2		10	1	1	brick	brick	1,666.9
STP 28	1		13	1	10	bottle	glass	20.1
STP 28	1		13	2	3	unidentified	glass	5.0
STP 28	1		13	3	5	spring	iron alloy	140.8
STP 28	1		13	4	109	nail	iron alloy	405.6
STP 28	1		13	5	2	unidentified	iron alloy	6.8

CITY OF SARATOGA SPRINGS

PLANNING BOARD

City Hall - 474 Broadway
Saratoga Springs, New York 12866-2296
Tel: 518-587-3550 fax: 518-580-9480
http://www.saratoga-springs.org

[FOR OFFICE USE]

_____
(Application #)

_____
(Date received)

APPLICATION FOR: SPECIAL USE PERMIT

(Rev: 05/2016)

Project Name: 246 West Ave. Apartments

Property Address/Location: 246 West Avenue

Tax Parcel #: 178.33-1-20&21 Zoning District: T-4 Urban Neighbohood
(for example: 165.52-4-37)

Proposed Use: 16 residential units

Type of Special Use Permit: ☑ Permanent ☐ Temporary ☐ Renewable

	APPLICANT(S)*	OWNER(S) *(If not applicant)*	ATTORNEY/AGENT
Name	John-Paul Builders, LLC	246 West Avenue, INC.	The LA Group
Address	796 Burdeck Street	84 Everett Road Albany, NY 12205	40 Long Alley
Pho	[redacted]		[redacted]
Ema	[redacted]		

Identify primary contact person: ☐ Applicant ☐ Owner ☑ Agent

* An applicant must be the property owner, lessee, or one with an option to lease or purchase the property in question.

Please check the following to affirm information is included with submission.

☑ Sketch Plan Attached:
Applicant is encouraged to submit sketch plans showing features of the site and /or neighborhood and illustrate proposed use.

☑ Environmental Assessment Form:
All applications must include a completed SEQR Short or Long Form. SEQR Forms can be completed at http://www.dec.ny.gov/permits/6191.html.

☑ Water Service Connection Agreement- For all projects including new water connections to the City system, a copy of a signed water service connection fee agreement with the City Department of Public Works is required and MUST be submitted with this application.

☑ Application Fee: $750.00 (check box)
A check for the total amount made payable to: "Commissioner of Finance" MUST accompany this application.

☐ 3 hard copies (*1 signed original) and one electronic copy (PDF) of complete application and ALL attachments.

Submission Deadline - Check City's website (www.saratoga-springs.org) for application deadlines and meeting dates.

Does any City officer, employee or family member thereof have a financial interest (as defined by General Municipal Law Section 809) in this application? YES ☐ NO ☑. If YES, a statement disclosing the name, residence, nature and extent of this interest must be filed with this application.

I, the undersigned owner, leasee or purchaser under contract for the property, hereby request Special Use Permit approval by the Planning Board for the identified property above. I agree to meet all requirements under Section 240-7.1 of the Zoning Code of the City of Saratoga Springs.

Furthermore, I hereby authorize members of the Planning Board and designated City staff to enter the property associated with this application for purposes of conducting any necessary site inspections relating to this application.

Applicant Signature: _____ Date: _____

If applicant is not current owner, owner must also sign.

Owner Signature: _____ Date: _____

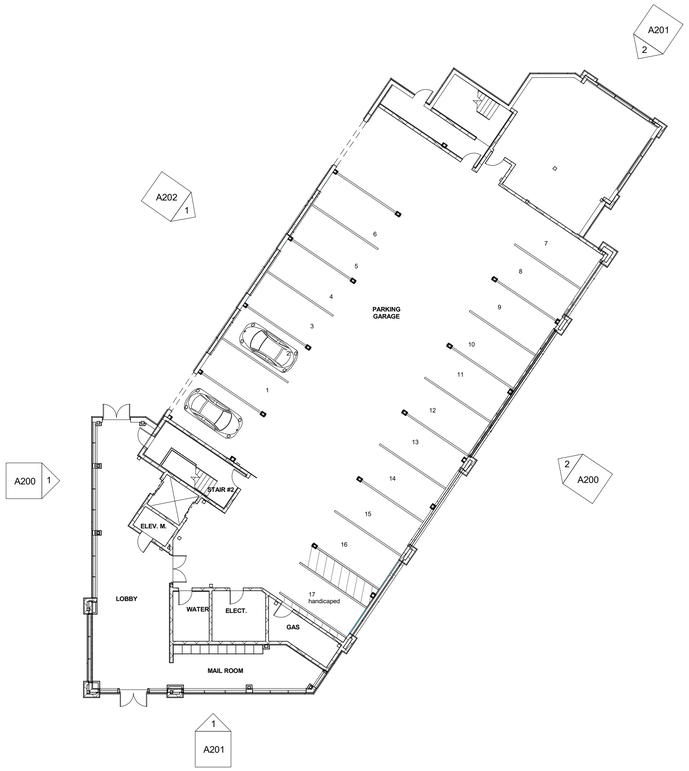

1 Level 1 (GROUND LEVEL PARKING)
1/16" = 1'-0"

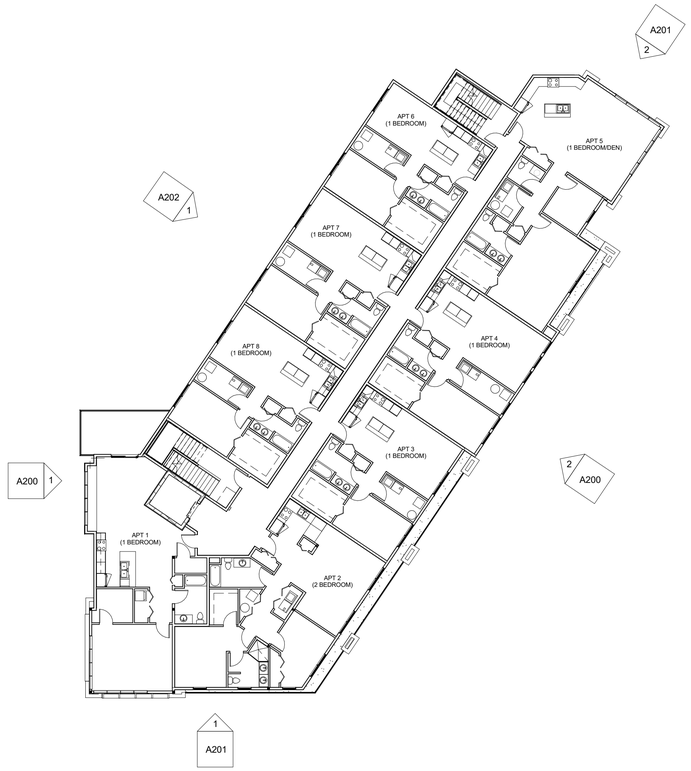

2 LEVEL 2
1/16" = 1'-0"

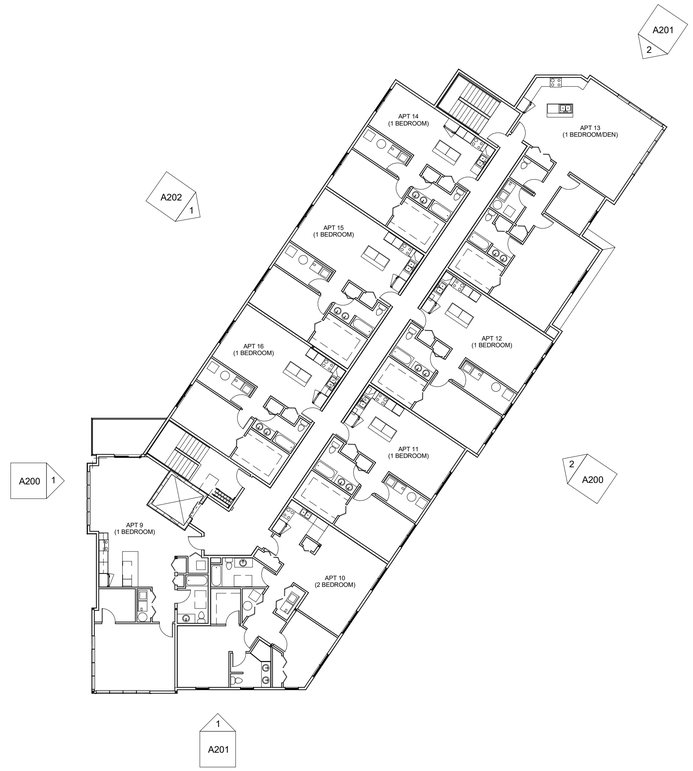

3 LEVEL 3
1/16" = 1'-0"

6/22/16

RE4ORM ARCHITECTURE
323 CLINTON STREET
SCHENECTADY, NY 12305
P:518.399.4174
F:518.399.4105
WWW.RE4ORMARCHITECTURE.COM

246 WEST AVE APARTMENTS

246 WEST AVE
SARATOGA SPRINGS, NY

FLOOR PLANS

A100

CONTRACTOR SHALL VERIFY ALL DIMENSION AT SITE. UNAUTHORIZED ALTERATIONS OR
ADDITIONS TO THIS DOCUMENT IS A VIOLATION OF THE NEW YORK STATE EDUCATION LAW.

1 NORTH ELEVATION
1/8" = 1'-0"

ELEVATION NOTES	
LABEL	ELEVATION NOTE
E01	"SMARTSIDE" ENGINEERED WOOD LAP SIDING FACTORY FINISHED COLOR TBD
E02	
E03	"SMARTSIDE" ENGINEERED WOOD TRIM FASCIA BOARDS & VENTED SOFFIT FACTORY FINISHED COLOR TBD
E04	"SMARTSIDE" ENGINEERED WOOD TRIM CORNER BOARDS FACTORY FINISHED COLOR TBD
E05	CULTURED STONE SILL
E06	CULTURED STONE VENEER TBD
E07	DECORATIVE HEAVY TIMBER BRACKETS, PAINTED COLOR TBD
E08	"SMARTSIDE" ENGINEERED WOOD SHAKE SIDING FACTORY FINISHED COLOR TBD
E09	COLUMNS WRAPED WITH "SMARTSIDE" ENGINEERED WOOD TRIM BORADS FACTORY FINISHED COLOR TBD
E10	FYPON OR EQUAL DECORATIVE ROUND LOUVER & TRIM
E11	DECORATIVE TRUSS & TRIM PAINTED COLOR TBD
E12	CULTURED STONE VENEER PIER WITH CONCRETE CAP
E13	STANDING SEAM METAL ROOF, COLOR TBD
E14	"MIRATEC" AND "EXTIRA" COMPOSITE BOARDS (PANEL & TRIMS) PAINTED, COLOR TBD
E15	"SMARTSIDE" ENGINEERED WOOD TRIM BOARDS FACTORY FINISHED COLOR TBD
E16	CUPOLA (CONTRACTORS OPTION TO BUILD IN PLACE OR INSTALL PREMENUACTURED UNIT)
E17	CABLE PIPE RAIL WITH PAINTED POSTS COLOR TBD
E18	ROOF CANOPY WITH ASPHALT SHINGLES AND "SMARTSIDE" FASCIA BOARDS & SOFFITS

2 SOUTH (BIKE PATH) ELEVATION
1/8" = 1'-0"

6/22/16

RE4ORM ARCHITECTURE
323 CLINTON STREET
SCHENECTADY, NY 12305
P:518.399.4174
F:518.399.4105
WWW.RE4ORMARCHITECTURE.COM

246 WEST AVE APARTMENTS

246 WEST AVE
SARATOGA SPRINGS, NY

EXTERIOR ELEVATIONS

A200

CONTRACTOR SHALL VERIFY ALL DIMENSION AT SITE. UNAUTHORIZED ALTERATIONS OR ADDITIONS TO THIS DOCUMENT IS A VIOLATION OF THE NEW YORK STATE EDUCATION LAW.

ELEVATION NOTES	
LABEL	ELEVATION NOTE
E01	"SMARTSIDE" ENGINEERED WOOD LAP SIDING FACTORY FINISHED COLOR TBD
E02	
E03	"SMARTSIDE" ENGINEERED WOOD TRIM FASCIA BOARDS & VENTED SOFFIT FACTORY FINISHED COLOR TBD
E04	"SMARTSIDE" ENGINEERED WOOD TRIM CORNER BOARDS FACTORY FINISHED COLOR TBD
E05	CULTURED STONE SILL
E06	CULTURED STONE VENEER TBD
E07	DECORATIVE HEAVY TIMBER BRACKETS, PAINTED COLOR TBD
E08	"SMARTSIDE" ENGINEERED WOOD SHAKE SIDING FACTORY FINISHED COLOR TBD
E09	COLUMNS WRAPED WITH "SMARTSIDE" ENGINEERED WOOD TRIM BORADS FACTORY FINISHED COLOR TBD
E10	FYPON OR EQUAL DECORATIVE ROUND LOUVER & TRIM
E11	DECORATIVE TRUSS & TRIM PAINTED COLOR TBD
E12	CULTURED STONE VENEER PIER WITH CONCRETE CAP
E13	STANDING SEAM METAL ROOF, COLOR TBD
E14	"MIRATEC" AND "EXTIRA" COMPOSITE BOARDS (PANEL & TRIMS) PAINTED, COLOR TBD
E15	"SMARTSIDE" ENGINEERED WOOD TRIM BOARDS FACTORY FINISHED COLOR TBD
E16	CUPOLA (CONTRACTORS OPTION TO BUILD IN PLACE OR INSTALL PREMENUACTURED UNIT)
E17	CABLE PIPE RAIL WITH PAINTED POSTS COLOR TBD
E18	ROOF CANOPY WITH ASPHALT SHINGLES AND "SMARTSIDE" FASCIA BOARDS & SOFFITS

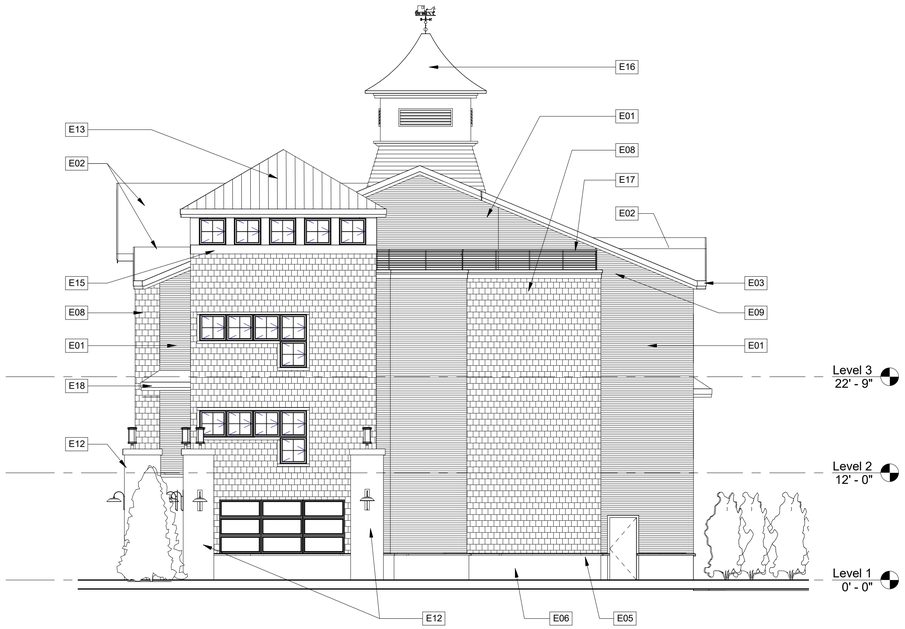

2 EAST ELEVATION
1/8" = 1'-0"

1 WEST ELEVATION
1/8" = 1'-0"

6/22/16

RE4ORM ARCHITECTURE
323 CLINTON STREET
SCHENECTADY, NY 12305
P:518.399.4174
F:518.399.4105
WWW.RE4ORMARCHITECTURE.COM

246 WEST AVE APARTMENTS

246 WEST AVE
SARATOGA SPRINGS, NY

EXTERIOR ELEVATIONS

A201

CONTRACTOR SHALL VERIFY ALL DIMENSION AT SITE. UNAUTHORIZED ALTERATIONS OR ADDITIONS TO THIS DOCUMENT IS A VIOLATION OF THE NEW YORK STATE EDUCATION LAW.

ELEVATION NOTES	
LABEL	ELEVATION NOTE
E01	"SMARTSIDE" ENGINEERED WOOD LAP SIDING FACTORY FINISHED COLOR TBD
E02	
E03	"SMARTSIDE" ENGINEERED WOOD TRIM FASCIA BOARDS & VENTED SOFFIT FACTORY FINISHED COLOR TBD
E04	"SMARTSIDE" ENGINEERED WOOD TRIM CORNER BOARDS FACTORY FINISHED COLOR TBD
E05	CULTURED STONE SILL
E06	CULTURED STONE VENEER TBD
E07	DECORATIVE HEAVY TIMBER BRACKETS, PAINTED COLOR TBD
E08	"SMARTSIDE" ENGINEERED WOOD SHAKE SIDING FACTORY FINISHED COLOR TBD
E09	COLUMNS WRAPED WITH "SMARTSIDE" ENGINEERED WOOD TRIM BORADS FACTORY FINISHED COLOR TBD
E10	FYPON OR EQUAL DECORATIVE ROUND LOUVER & TRIM
E11	DECORATIVE TRUSS & TRIM PAINTED COLOR TBD
E12	CULTURED STONE VENEER PIER WITH CONCRETE CAP
E13	STANDING SEAM METAL ROOF, COLOR TBD
E14	"MIRATEC" AND "EXTIRA" COMPOSITE BOARDS (PANEL & TRIMS) PAINTED, COLOR TBD
E15	"SMARTSIDE" ENGINEERED WOOD TRIM BOARDS FACTORY FINISHED COLOR TBD
E16	CUPOLA (CONTRACTORS OPTION TO BUILD IN PLACE OR INSTALL PREMENUACTURED UNIT)
E17	CABLE PIPE RAIL WITH PAINTED POSTS COLOR TBD
E18	ROOF CANOPY WITH ASPHALT SHINGLES AND "SMARTSIDE" FASCIA BOARDS & SOFFITS

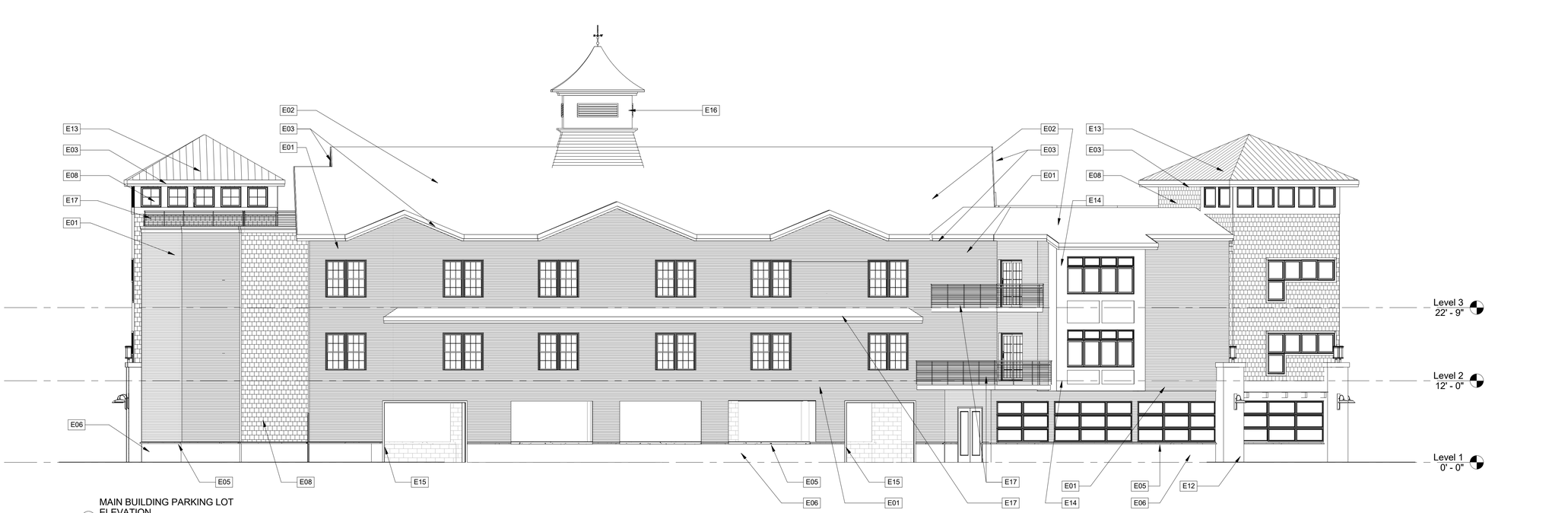

1 MAIN BUILDING PARKING LOT ELEVATION
1/8" = 1'-0"

6/22/16

RE4ORM ARCHITECTURE
323 CLINTON STREET
SCHENECTADY, NY 12305
P:518.399.4174
F:518.399.4105
WWW.RE4ORMARCHITECTURE.COM

246 WEST AVE APARTMENTS

246 WEST AVE
SARATOGA SPRINGS, NY

EXTERIOR ELEVATION

A202

CONTRACTOR SHALL VERIFY ALL DIMENSION AT SITE. UNAUTHORIZED ALTERATIONS OR ADDITIONS TO THIS DOCUMENT IS A VIOLATION OF THE NEW YORK STATE EDUCATION LAW.

246 WEST AVE APARTMENTS

Saratoga, New York

PERSPECTIVE

RE4ORM ARCHITECTURE

246 WEST AVE APARTMENTS

Saratoga, New York

PERSPECTIVE

BE4ORM ARCHITECTURE

246 WEST AVE APARTMENTS

Saratoga, New York

PERSPECTIVE

RE4ORM ARCHITECTURE

Site Plan
246 West Avenue Apartments

City of Saratoga Springs, New York

City PB#

June 23, 2016

Vicinity Map:

SCALE: NTS

CITY OF SARATOGA SPRINGS
STANDARD NOTES

1. All work must conform to all Federal, State and City Codes, specifications, ordinances, rules and regulations.
2. The elevation base for the contours and benchmarks are based on the National Geodetic Vertical Datum, 1929.
3. All refuse, debris and miscellaneous items to be removed shall be legally disposed of off-site by the Contractor to a location approved by the City Engineer.
4. The Contractor must set up a pre-construction meeting with the City Engineer prior to any construction. Construction inspections by the a designated representative of design professional are required. The cost of the construction inspection is the responsibility of the Applicant/Developer.
5. The contractor must obtain a blasting permit from the Building Inspector if any blasting is required for the project.
6. The contractor must obtain a street opening permit issued by the Department of Public Works for any work in the street or right-of-way of any City street, road or alley.
7. All points of construction ingress or egress shall be maintained to prevent tracking or flowing of sediment or debris onto a public road.
8. No Certificate of Occupancy will be issued until all site work has been completed in accordance with the approved plans; and an as-built drawing has been prepared in accordance with the requirements of the City Engineer.
9. The applicant must verify that the proposed project can accommodate the turning movements of any fire truck that the fire department so designates.

Approval

Approved under authority of a resolution adopted _____
by the Planning Board of the City of Saratoga Springs.

_____ Chairperson

Date Signed _____

SITE STATISTICS

PROPOSED USE:	16 Apartments	
TAX MAP PARCEL NUMBER	178.33-1-20&21	
LEASE LOT SIZE	.51 ACRES	
EXISTING ZONING	T-4 Urban Neighborhood	
BUILDING SETBACKS	REQUIRED	PROPOSED
BUILD-TO-LINE	12'-18'	12.5'
FRONTAGE BUILDOUT	50%MIN.	63%
SIDE SETBACK	12' AVERAGE PRINCIPAL BLDG	15.5'
	6' MIN OUTBUILDING	8.02'
REAR SETBACK	24' PRINCIPAL BLDG	27.07'
	5' MIN OUTBUILDING	9.34'
BUILDING HEIGHT	2 STORY MIN, 40' MAX HT.	3 STORY, 40'-0"
PARKING REQUIREMENTS		
RESIDENCES WITHIN T-4 ZONE		
1.5 PER DWELLING UNIT	24 SPACES	24 SPACES 7 SPACES OUTSIDE BUILDINGS 17 SPACES WITHIN THE BUILDINGS

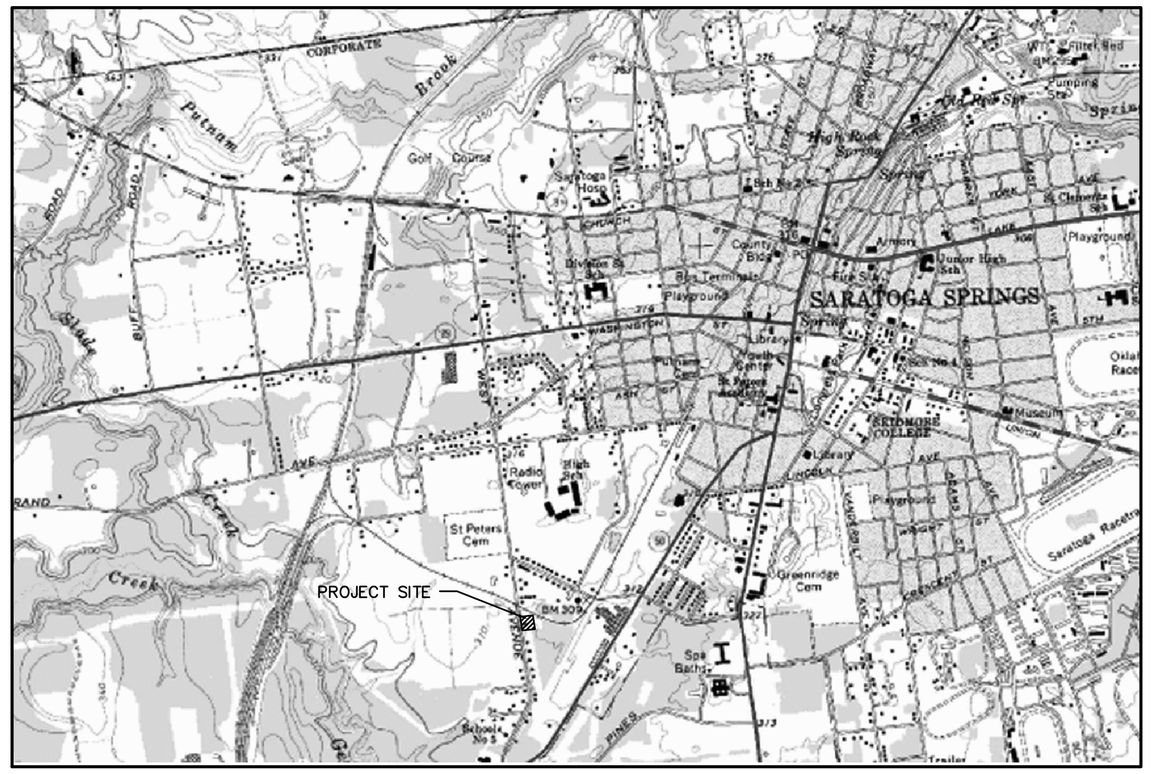

Project Location Map:

SCALE: NTS

SHEET INDEX:

	COVER SHEET
	BOUNDARY AND TOPOGRAPHIC SURVEY
L-1	SITE DEMOLITION AND PREPARATION PLAN
L-2	SITE LAYOUT AND MATERIALS PLAN
L-3	SITE GRADING AND DRAINAGE PLAN
L-4	SITE UTILITY PLAN
L-4.1	OFF-SITE WATERLINE CONNECTION
L-5	SITE LANDSCAPE PLAN
L-6	SITE LIGHTING PLAN
L-7	SITE DETAILS
L-8	SITE DETAILS
L-9	SITE DETAILS
L-10	SITE DETAILS
L-11	STORMWATER DETAILS
L-12	SITE DETAILS

Applicant:

John-Paul Builders, LLC
796 Burdeck Street
Schenectady, NY 12306

Prepared By:

the LA group
Landscape Architecture
and Engineering, P.C.

40 Long Alley
Saratoga Springs
New York 12866
518/587-8100
Telefax 518/587-0180

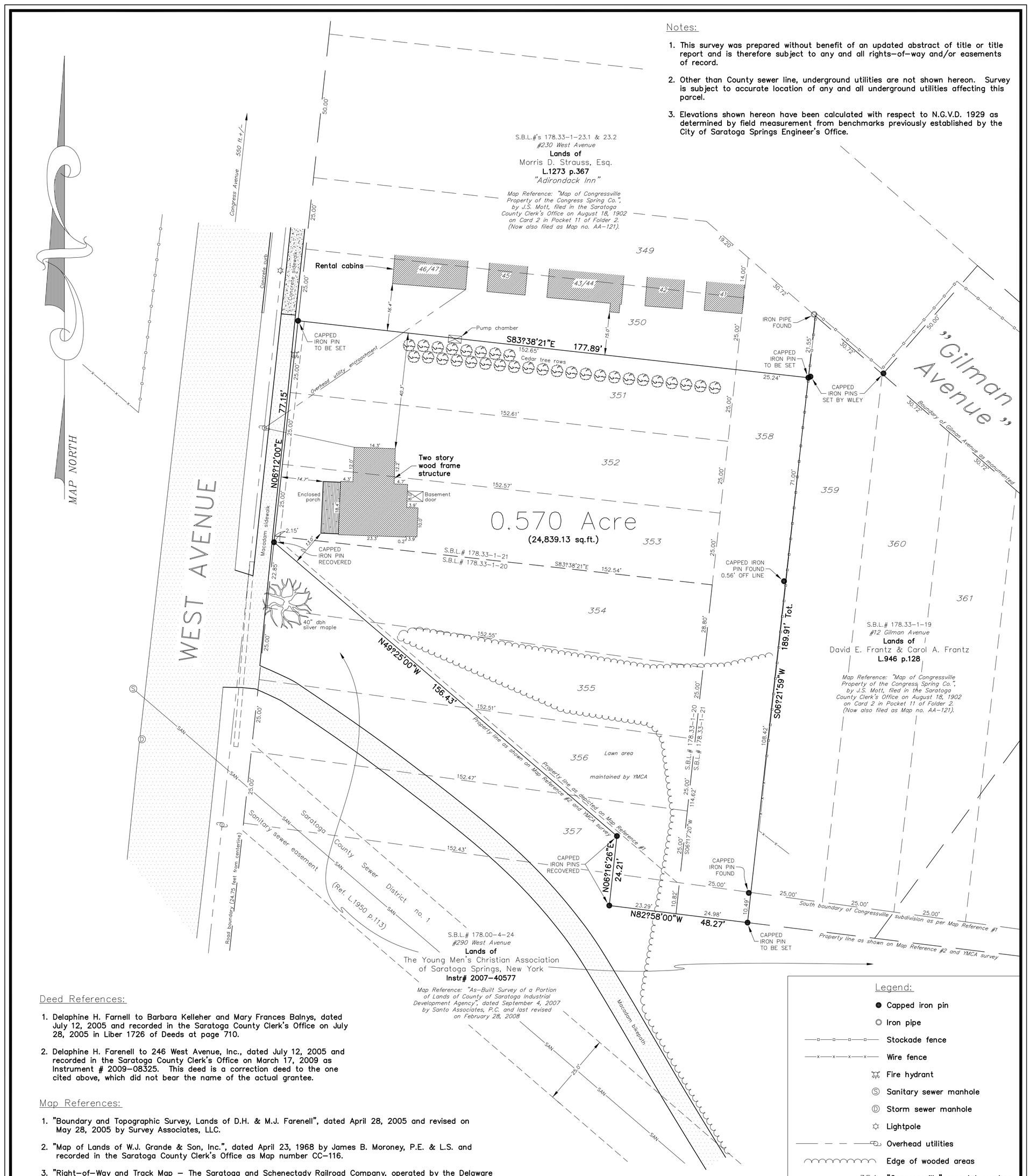

Notes:

1. This survey was prepared without benefit of an updated abstract of title or title report and is therefore subject to any and all rights-of-way and/or easements of record.
2. Other than County sewer line, underground utilities are not shown hereon. Survey is subject to accurate location of any and all underground utilities affecting this parcel.
3. Elevations shown hereon have been calculated with respect to N.G.V.D. 1929 as determined by field measurement from benchmarks previously established by the City of Saratoga Springs Engineer's Office.

Deed References:

1. Delaphine H. Farnell to Barbara Kelleher and Mary Frances Balnys, dated July 12, 2005 and recorded in the Saratoga County Clerk's Office on July 28, 2005 in Liber 1726 of Deeds at page 710.
2. Delaphine H. Farenell to 246 West Avenue, Inc., dated July 12, 2005 and recorded in the Saratoga County Clerk's Office on March 17, 2009 as Instrument # 2009-08325. This deed is a correction deed to the one cited above, which did not bear the name of the actual grantee.

Map References:

1. "Boundary and Topographic Survey, Lands of D.H. & M.J. Farenell", dated April 28, 2005 and revised on May 28, 2005 by Survey Associates, LLC.
2. "Map of Lands of W.J. Grande & Son, Inc.", dated April 23, 1968 by James B. Moroney, P.E. & L.S. and recorded in the Saratoga County Clerk's Office as Map number CC-116.
3. "Right-of-Way and Track Map - The Saratoga and Schenectady Railroad Company, operated by the Delaware & Hudson Company, Saratoga Division - Main Line - Ballston Spa to Saratoga Springs, Station 1951+85.5 to Station 2005+90", dated June 30, 1916 and filed in the offices of C.P. Rail.
4. Map no. 37, Parcel no. 44 for the Grade Crossing Eliminations of the Railroad operated by the Delaware & Hudson Railroad Corporation through the City of Saratoga Springs and the Towns of Greenfield and Wilton", dated August 5, 1957 and filed in the Saratoga County Clerk's Office. Notice of appropriation was recorded in Liber 658 of Deeds at page 169.

Legend:

- Capped iron pin
- Iron pipe
- Stockade fence
- Wire fence
- Fire hydrant
- Sanitary sewer manhole
- Storm sewer manhole
- Lightpole
- Overhead utilities
- Edge of wooded areas
- 354 "Congressville" map lot number

PREPARED FOR:
THE PIKE COMPANY
210 CLIFTON CORPORATE PARKWAY
CLIFTON PARK, N.Y. 12065

REV.	DATE	BY	CHK.	DESCRIPTION
2	06/29/12	DRP	ACS	PROPERTY LINES REVISED
1	10/31/11	AJS	ACS	PROPOSED BOUNDARY LINE AGREEMENT
0	09/30/11	SRS	ACS	ORIGINAL SURVEY DATE

Certifications indicated hereon signify that this survey was prepared in accordance with the existing Code of Practice of Land Surveys adopted by the N.Y. State Association of Professional Land Surveyors. Said certifications shall run only to the title insurance company, governmental agency, and lending institution listed hereon and to the assignees of the lending institution. Certifications are not transferable to additional institutions or subsequent owners.

Unauthorized alteration or addition to a survey map bearing a licensed land surveyor's seal is a violation of Section 7209, Subdivision 2 of the N.Y. State Education Law. Only copies from the original of this survey marked with an original of the land surveyor's embossed seal shall be considered to be valid copies.

In addition, only copies from the original of this survey marked with an original of the land surveyor's signature in RED shall be considered to be valid copies.

SANTO ASSOCIATES
LAND SURVEYING AND ENGINEERING, P.C.
1 BARNEY ROAD • SUITE 109
CLIFTON PARK, NY 12065
PHONE: (518) 383-8001 • FAX: (518) 383-6026

(C) 2011 Santo Associates P.C. "All Rights Reserved"
"Unauthorized Duplication is a Violation of Applicable Laws."

ANDREW C. SCHAUFFERT, L.S. LICENSE NO. 049901

SURVEY MAP OF LANDS OF

246 WEST AVENUE, INC.

AT 246 WEST AVENUE, SARATOGA SPRINGS, N.Y. 12866

DRAWN BY: SRS	CITY OF: SARATOGA SPRINGS	SCALE: 1" = 20'
CHECKED BY: ACS	COUNTY OF: SARATOGA	DWG. NO.: 7277
DATE: 09/30/11	STATE OF: NEW YORK	REV.: 2

LANDS OF
DAVID E. FRANTZ & CAROL A.
FRANTZ

Rental cabins

41

42

43/44

45

46/47

Cedar tree rows

EXISTING CEDAR HEDGE TO BE RELOCATED COORDINATE LOCATION WITH OWNER OF "ADIRONDACK INN", CONTRACTOR TO GUARANTEE THE TRANSPLANTED TREES FOR ONE YEAR. REPLACEMENT TREES IF NEEDED WILL BE ARBORVITAE 8'–10' HT.

Pump chamber

PUMP CHAMBER TO BE REMOVED COORDINATE LOCATION AND REMOVAL WITH OWNER OF "ADIRONDACK INN"

LANDS OF
MORRIS D. STRAUSS, ESQ.
"ADIRONDACK INN"

Overhead utility

Two story wood frame structure

Basement door

Enclosed porch

B1

B2

B3

B4

B5

SILT FENCE (TYP.)

DISEASED TREE TO BE REMOVED

6" dbl. silver maple

LANDS OF
THE YOUNG MEN'S CHRISTIAN
ASSOCIATION
OF SARATOGA SPRINGS

Saratoga County Sewer District no. 1

Sanitary sewer easement (Ref. L.1950

Concrete sidewalk

Macadam sidewalk

Concrete curb

EXISTING HYDRANT TO BE REMOVED, PIPE AND CAP LINE PROPERLY

2 L–12 STABILIZED CONSTRUCTION ENTRANCE

EXISTING CULVERT PIPE TO BE REMOVED

Inv.in=302.50

WEST AVENUE

Existing 36" dia

SITE PREPARATION & DEMOLITION NOTES:

1. ALL REFUSE, DEBRIS AND MISCELLANEOUS ITEMS TO BE REMOVED, THAT ARE NOT TO BE STOCKPILED FOR LATER USE ON THE PROJECT OR DELIVERED TO THE OWNER, SHALL BE LEGALLY DISPOSED OF OFF–SITE BY THE CONTRACTOR.
2. ALL ITEMS REQUIRING REMOVAL SHALL BE REMOVED TO FULL DEPTH TO INCLUDE BASE MATERIAL AND FOOTINGS OR FOUNDATIONS AS APPLICABLE, AND REUSED AS DIRECTED BY THE OWNER OR LEGALLY DISPOSED OF OFF–SITE BY CONTRACTOR.
3. CONTRACTOR SHALL STRIP AND STOCKPILE EXISTING TOPSOIL TO FULL DEPTH WITHIN LIMIT OF GRADING BEFORE COMMENCING EXCAVATION AND GRADING OPERATIONS. TOPSOIL SHALL NOT BE REMOVED FROM THE SITE, UNLESS APPROVED BY THE OWNER'S REPRESENTATIVE.
4. THE CONTRACTOR IS RESPONSIBLE FOR ANY DAMAGE TO EXISTING CONDITIONS THAT ARE DUE TO CONTRACTOR OPERATIONS AND WHICH ARE OUTSIDE THE LIMIT OF WORK.
5. THE CONTRACTOR SHALL COORDINATE ALL ADJUSTMENT OR ABANDONMENT OF UTILITIES WITH THE RESPECTIVE UTILITY COMPANY AND PAY ALL ASSOCIATED COSTS.
6. ALL POINTS OF CONSTRUCTION INGRESS AND EGRESS SHALL BE PROTECTED TO PREVENT TRACKING OF MUD ONTO PUBLIC WAYS. ANY MUD ON PUBLIC WAYS ORIGINATING FROM THE JOB SITE SHALL BE CLEANED BY THE CONTRACTOR DAILY.
7. CONTRACTOR SHALL SECURE ALL PERMITS THAT MAY BE REQUIRED FROM ALL JURISDICTIONS AFFECTED BY THIS WORK.
8. ANY TREE AND SHRUB REMOVAL SHALL INCLUDE THE FILLING, CUTTING, GRUBBING OUT OF ENTIRE ROOT SYSTEM AND SATISFACTORY OFF–SITE DISPOSAL OF ALL TREES, SHRUBS, STUMPS, VEGETATIVE AND EXTRANEOUS DEBRIS PRODUCED THROUGH THE REMOVAL OPERATIONS.
9. CONTRACTOR SHALL APPLY FOR AND OBTAIN DEMOLITION PERMIT FROM CITY PRIOR TO ANY DEMOLITION WORK. ON–SITE EXISTING WATER AND SEWER DISCONNECTIONS MUST BE DEMONSTRATED TO CITY ENGINEER.

BORING RESULTS FROM GEOTECHNICAL EVALUATION FOR PROPOSED OFFICE COMPLEX: PREPARED BY, DENTE ENGINEERING: APRIL 2005

BORING 1:
0–8" TOPSOIL
8"–96" BROWN F–M SAND, TRACE SILT: WET AT 84"
96"–21' GRADES F–C SAND, LITTLE FINE GRAVEL, TRACE SILT
21'–26' GRADES DARK GRAY
26'–31' GRADES GRAY FINE SAND, TRACE SILT
31'–46' GRAY F–M SAND, SOME SILT
46'–51' GRADES SILT, TRACE FINE SAND
51'–52' GRADES FINE SAND, TRACE SILT

BORING 2:
0–10" TOPSOIL
10"–60" BROWN F–M SAND, TRACE SILT
60"–84" BROWN FINE SAND & SILT WITH PARTINGS FINE SAND, TRACE SILT
84"–17' FROWN F–C SAND, TRACE TO LITTLE FINE GRAVEL, TRACE SILT: WET AT 84"

BORING 3:
0–12" TOPSOIL BECOMES BROWN F–M SAND TRACE SILT
12"–9' DARK BROWN F–M SAND, TRACE SILT: WET AT 9'
9'–16' BROWN F–C SAND, TRACE TO LITTLE FINE GRAVEL, TRACE SILT
16'–17' BECOMES GRAY SAND

BORING 4:
0–12" TOPSOIL BECOMES BROWN F–M SAND, TRACE SILT
12"–96" BROWN F–M SAND, TRACE SILT
96"–10' MOTTLED SILT, SOME FINE SAND: WET AT 10'
10'–16' BROWN F–C SAND, TRACE SILT
16'–17' GRADES TRACE FINE GRAVEL

BORING 5:
0–8" TOPSOIL
8"–84" BROWN F–M SAND, SOME SILT TRACE GRAVEL: POSSIBLE FILL: WET AT 60"
84"–16' BROWN F–C SAND TRACE GRAVEL & SILT
16'–17' BECOMES GRAY/BROWN SAND

LEGEND

- EXISTING BUILDING OR PAVEMENT TO BE REMOVED
- EXISTING VEGETATION TO BE REMOVED
- SF — SILT FENCE TYP. (3 / L–11)

GRAPHIC SCALE
10 0 5 10 20
1 inch = 10 feet

Approval
Approved under authority of a resolution adopted _____ by the Planning Board of the City of Saratoga Springs.
_____ Chairperson
Date Signed _____

the LA group
Landscape Architecture and Engineering, PC
40 Long Alley
Saratoga Springs
New York 12866
P 518/587-8100
F 518/587-0180
www.thelagroup.com

Unauthorized alteration or addition to this document is a violation of Section 7209 of the New York State Education Law

© the LA Group 2008

Design MCB
Drawn MCB
Checked CMI

PREPARED FOR:
John-Paul Builders, LLC
796 Burdeck Street
Schenectady, NY 12306

246 WEST AVENUE APARTMENTS
SARATOGA SPRINGS, NY

Title
SITE DEMOLITION AND PREPERATION PLAN

Revisions

City #:
Project: 201178
Date: 6/23/2016

Drawing
L-1

Plotted By: ANDREW LONGJACKER
Save Date: 6/22/2016 3:53 PM
File Name: G:\Proj\201178\CAD\L1\178_West_Ave_246\201178CADL1_EC.dwg

LANDS OF
DAVID E. FRANTZ & CAROL A.
FRANTZ

CONCRETE DUMPSTER PAD WITH FENCE ENCLOSURE (8/L-8)
DO NOT ENTER SIGN
PARKING LOT LIGHT POLE (6/L-8) (1/L-6)
PAVEMENT MARKING
LAWN
24' REAR YARD BUILDING SETBACK LINE
STONE DRIP STRIP TYP.
CONCRETE TRANSITION CURB (3/L-7)
CONCRETE CURB TYP. (2/L-7)
GRAVEL DRIP STRIP TYP.
BUILDING OVERHANG TYP.
BUILDING FOOTPRINT LINE TYP.
EXISTING ASPHALT BIKE PATH.
ASPHALT PAVING (1/L-7)
STONE DRIP STRIP TYP.
KNOX BOX LOCATION
12' FRONT BUILD TO LINE
STOP SIGN. (8/L-7)
DETECTABLE WARNING STRIP TYP. (11/L-7)
6' WIDE BENCH (4/L-12)
INTERPRETIVE SIGN (8/L-12)
PROPOSED BIKE RACK (9/L-12)
CONCRETE PAVERS (12/L-7)
EXISTING STREET LIGHT
DECORATIVE STREET LIGHT (4/L-8)
UTILITY POLE TO REMAIN
CONCRETE PAVEMENT ENTRANCE (7/L-7)
CONCRETE WALK TYP. (5/L-7)
GRAVEL DRIP STRIP TYP. (1/L-8)

LANDS OF
THE YOUNG MEN'S CHRISTIAN
ASSOCIATION
OF SARATOGA SPRINGS

LANDS OF
MORRIS D. STRAUSS, ESQ.
"ADIRONDACK INN"

Saratoga County Sewer District no. 1
Sanitary sewer easement (Ref. L.1950 p.113)

Rental cabins
41
42
43/44
45
46/47

Cedar Trees & Bushes

Concrete sidewalk
Macadam sidewalk
Concrete curb

Existing 36"dia

WEST AVENUE

GRAPHIC SCALE
10 0 5 10 20
1 inch = 10 feet

Approval
Approved under authority of a resolution adopted
by the Planning Board of the City of Saratoga Springs.
Chairperson
Date Signed

LAYOUT NOTES

1. ALL LINES AND DIMENSIONS ARE PARALLEL OR PERPENDICULAR TO THE LINES FROM WHICH THEY ARE MEASURED UNLESS OTHERWISE INDICATED.
2. ALL LINE AND GRADE PER DRAWINGS SHALL BE LAID OUT BY A NEW YORK STATE REGISTERED CIVIL ENGINEER OR SURVEYOR ENGAGED BY THE CONTRACTOR. ALL STAKED LAYOUTS OF PAVEMENTS AND SITE IMPROVEMENTS SHALL BE APPROVED BY THE OWNER'S REPRESENTATIVE PRIOR TO INSTALLATION.
3. STORAGE AREAS FOR CONTRACTOR'S EQUIPMENT AND MATERIALS SHALL BE ON AND WITHIN LIMITS OF WORK AS SHOWN ON THE PLANS AND AS APPROVED BY THE OWNER'S REPRESENTATIVE.
4. THE CONTRACTOR SHALL VERIFY ALL EXISTING CONDITIONS IN THE FIELD PRIOR TO CONSTRUCTION AND REPORT ANY DISCREPANCIES IN THE SITE SURVEY TO THE OWNER'S REPRESENTATIVE PRIOR TO STARTING WORK.
5. AT ALL LOCATIONS WHERE EXISTING CURBING, BITUMINOUS CONCRETE ROADWAY OR CONCRETE SIDEWALK ABUT NEW CONSTRUCTION, THE EDGE OF THE EXISTING CURB OR PAVEMENT SHALL BE SAW CUT TO A CLEAN, SMOOTH EDGE. PROVIDE PAVEMENT KEY AS DETAILED. TACK COAT EXPOSED EDGES OF EXISTING BITUMINOUS CONCRETE PRIOR TO PLACEMENT OF NEW BITUMINOUS CONCRETE PAVEMENT.
6. BITUMINOUS PAVEMENT SHALL NOT BE LAID WHEN GROUND TEMPERATURE IS LESS THAN 40° F. AND AIR TEMPERATURE IS LESS THAN 50° F.
7. ALL LIGHT STANDARDS SHALL BE LOCATED AT A MINIMUM OF TWO FEET SIX INCHES (2'-6") FROM BACK OF EOP; VERIFY W/ OWNER'S REPRESENTATIVE PRIOR TO INSTALLATION.
8. DIMENSIONS ON PARKING LOTS AND ROADWAYS ARE FROM FACE OR BOTTOM OF CURB TO FACE OR BOTTOM OF CURB.
9. ALL NEW WORK SHALL BE STAKED-OUT PRIOR TO CONSTRUCTION. THE OWNER'S REPRESENTATIVE SHALL BE NOTIFIED OF ANY DISCREPANCIES.
10. FIELD ADJUSTMENTS MUST BE APPROVED BY THE OWNER'S REPRESENTATIVE AND CITY ENGINEER WITHOUT EXCEPTION.
11. ALL EXISTING UTILITIES SHOWN IN THEIR RELATIVE POSITION. THE CONTRACTOR IS RESPONSIBLE FOR VERIFYING THE VERTICAL AND HORIZONTAL POSITION OF EXISTING UTILITIES PRIOR TO CONSTRUCTION.

LEGEND

CURB
CONCRETE SIDEWALK (SC, EJ)
PROPERTY LINE
POWER LINE EASEMENT
ACCESSIBLE PARKING
TRAFFIC PATTERN ARROW
SIGNAGE
REINFORCED SWALE

the LA group
Landscape Architecture
and Engineering, PC
40 Long Alley
Saratoga Springs
New York 12866
P 518/587-8100
F 518/587-0180
www.thelagroup.com

Unauthorized alteration or addition to this document is a violation of Section 7209 of the New York State Education Law

© the LA Group 2008

Design MCB
Drawn MCB
Checked CMI

PREPARED FOR:
John-Paul Builders, LLC
796 Burdeck Street
Schenectady, NY 12306

246 WEST AVENUE APARTMENTS
SARATOGA SPRINGS, NY

Revisions

City #:
Project: 201178
Date: 6/23/2016

Drawing
L-2

Title
SITE LAYOUT AND MATERIALS PLAN

Plotted By: MATT BROBSTON
Save Date: 6/23/2016 9:53:21 AM
File Name: G:\Projects\201178_West_Ave_246\201178CAD\L-2_LAYOUT.dwg

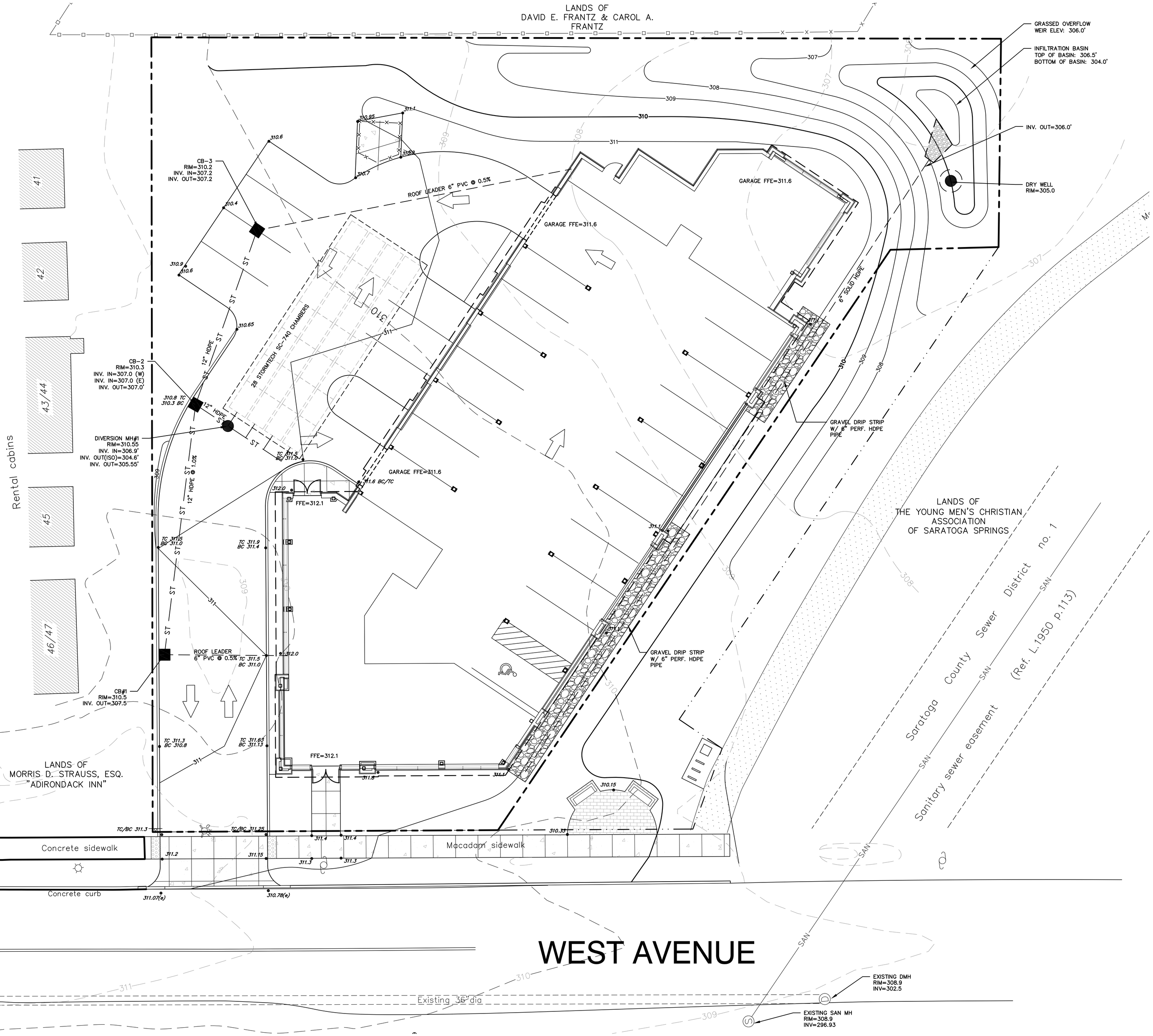

GRADING NOTES

1. SURVEY INFORMATION PROVIDED BY SANTO ASSOCIATES LAND SURVEYING AND ENGINEERING, P.C., BASED UPON A FIELD SURVEY COMPLETED SEPTEMBER 30, 2011
2. ALL GRADES SET IN THE FIELD SHALL BE COMPLETED BY A NEW YORK STATE LICENSED LAND SURVEYOR.
3. THE CONTRACTOR SHALL VERIFY ALL CONDITIONS IN THE FIELD AND REPORT ANY DISCREPANCIES BETWEEN THE PLANS AND ACTUAL CONDITIONS TO THE OWNER'S REPRESENTATIVE.
4. THE CONTRACTOR SHALL VERIFY PROPOSED GRADES PRIOR TO CONSTRUCTION AND REPORT ANY DISCREPANCIES TO THE OWNER'S REPRESENTATIVE.
5. THE CONTRACTOR SHALL PROVIDE DUST AND EROSION CONTROL AS APPROVED BY THE OWNER'S REPRESENTATIVE.
6. ALL FILL SLOPES 3:1 OR GREATER SHALL RECEIVE BIO-DEGRADEABLE FABRIC OR APPROVED EQUAL FOR EROSION CONTROL, UNLESS OTHERWISE SHOWN OR DIRECTED BY THE OWNER'S REPRESENTATIVE.
7. THE CONTRACTOR SHALL BLEND ALL NEW EARTHWORK INTO EXISTING GRADES AT THE LIMITS OF GRADING. PROVIDE SMOOTH ROUNDED TRANSITIONS AT ALL TOP AND BOTTOM OF SLOPES.

LEGEND

- EXISTING CONTOUR LINE
- PROPOSED CONTOUR LINE
- EXISTING STORM MAIN
- PROPOSED STORM MAIN
- PROPOSED BUILDING DRAINAGE LINES
- PROPOSED DRYWELL
- PROPOSED CATCH BASIN
- EXISTING SANITARY SEWER MANHOLE
- EXISTING SANITARY SEWER MAIN LINE

GRAPHIC SCALE

10 0 5 10 20

1 inch = 10 feet

Approval

Approved under authority of a resolution adopted _____ by the Planning Board of the City of Saratoga Springs.

_____ Chairperson

Date Signed _____

the LA group
Landscape Architecture and Engineering, PC
40 Long Alley
Saratoga Springs
New York 12866
P 518/587-8100
F 518/587-0180
www.thelagroup.com

Unauthorized alteration or addition to this document is a violation of Section 7209 of the New York State Education Law

© the LA Group 2008

Design MCB
Drawn MCB
Checked CMI

PREPARED FOR:
John-Paul Builders, LLC
796 Burdeck Street
Schenectady, NY 12306

246 WEST AVENUE APARTMENTS

SARATOGA SPRINGS, NY

Title: SITE GRADING AND DRAINAGE PLAN

Revisions

City #:
Project: 201178
Date: 6/23/2016

Drawing L-3

Plotted By: MATT BRODESTON
Plot Date: 6/23/2016 11:03 AM
File Name: G:\Projects\2011\178\CAD\L3_West_Ave_JNB20117\CAD\L3_GRADING.dwg

LANDS OF
DAVID E. FRANTZ & CAROL A.
FRANTZ

LANDS OF
THE YOUNG MEN'S CHRISTIAN
ASSOCIATION
OF SARATOGA SPRINGS

LANDS OF
MORRIS D. STRAUSS, ESQ.
"ADIRONDACK INN"

GARAGE FF ELEV.=311.6

FF ELEV.=312.1

SANITARY INV=303.10

3 L-10 SANITARY CLEANOUT
INV=304.58

Concrete sidewalk

Macadam sidewalk

Concrete curb

WEST AVENUE

Saratoga County Sewer District no. 1

Sanitary sewer easement (Ref. L.1950 p.113)

6" D.I.P. WATERLINE

54 LF - 6" PVC SDR26 @ 5.0%

4 L-9 INSTALL 12"X6" TEE, 6" GATE VALVE, AND 12" BUTTERFLY VALVE

12" D.I.P. WATERMAIN

SEE SHEET L-4.1 FOR OFF-SITE WATERLINE

1 L-9

5 L-9

Existing 36"dia

SMH-1
RIM=309.75
6" INV IN=300.4
8" INV OUT=299.91

1 L-10

56 LF - 8" C-900 @ 0.5%

EXISTING SAN MH
RIM=308.9
INV=296.93
INSIDE DROP CONNECTION
8" INV IN=299.63

CAP END FOR FUTURE CONNECTION

Plotted By: MATT BROBSTON
Save Date: 6/23/2016 5:18 PM
File Name: C:\Projects\201178_West_Ave_246\2011178CADD-4_UTIL.dwg

WATER SYSTEM NOTES

A. The location of underground utilities shown on this plan are for information only, and all utilities may not be shown. The Contractor shall contact U.F.P.O. (1-800-962-7962) and the proper local authorities or respective utility company having jurisdiction to field verify the location of all existing utilities before commencing work. Any costs incurred by the Contractor due to failure to contact the proper authorities shall become the responsibility of the Contractor.

B. Extend designated limit of work as necessary to accomplish site utility work as required by these Drawings and Specifications.

C. Water Service lines 4-inch and larger:

1. Pipe and Fittings
   a. Ductile Iron Pipe: Class 52, ANSI/AWWA C151/A21.51
   b. Mechanical Joint fittings: ANSI standard A21.10 and A21.11 (AWWA C110 and C111) Class 350.
2. Coatings
   a. Double cement mortar lining on interior and coal tar seal coat on interior and exterior in accordance with ANSI/AWWA C104/A21.11
3. Joints
   a. Conforming with ANSI/AWWA C111/A21.11
   b. Pipe – push on joint.
   c. fittings – mechanical joint, plain rubber gasket together with retainer glands having steel set screws.
4. Valve Boxes
   a. Cast iron two piece valve box as manufactured by Clow (Model F2454), or approved equal.
   b. Cover must be stay-put type (Clow Model F2490), or approved equal, and be clearly marked "Water."
5. Anchorage
   a. Concrete thrust blocks must be used at all changes in direction of 11 1/4° or greater, and at all tees, caps, fittings, hydrants and plugs.

D. Water service lines 2 1/2-inch and smaller (no line shall be smaller than 3/4-inch):

1. Pipe
   a. Copper water tube, type K, soft temper for underground service.
2. Corporation Stops
   a. Mueller H-15008 with AWWA inlet threads or approved equal.
   b. Valves 1 1/2-inch and larger must be used with tapping sleeve.
3. Curb-stop
   a. Mueller H-15209 or H-15219 curb-stops, non-draining or approved equal.
4. Couplings
   a. Mueller H-15403 110 compression connections or approved equal; three part union for copper-to-copper type connection.
5. Curb-box
   a. Mueller H-10314
   b. Extension type with arch pattern base or approved equal.
   c. Solid cover (Mueller or approved equal).
   d. Stationary rod.

E. Valves, Hydrants, etc.:

1. Valves – Mueller A-2380-20
   a. All valves under 12-inches in diameter shall be mechanical joint resilient wedge (R/W).
   b. R/W valves, 3-inches and larger, shall be iron body, non-rising stem conforming to AWWA C509. Gland bolts shall be zinc coated steel.
   c. All valves shall have a maximum working pressure rating of 200 psig.
   d. All valves shall have mechanical joint ends conforming to ANSI A21.10/A21.11
   e. Valves shall open right (clockwise) with a standard 2-inch square operating nut with arrow cast on it showing the direction of opening.
   f. Each valve shall be furnished complete with necessary nuts, bolts, studs and gaskets.
2. Butterfly Valves – Mueller Lineseal III
   a. With the exception of tapping valves, all valves 12-inches in diameter and larger shall be Mueller, or approved equal, butterfly valves.
   b. Butterfly valves, 12-inches and larger, shall be iron body, bronze mounted, 360-degree rubber seat with stainless steel shaft conforming to AWWA C504. gland bolts shall be zinc coated steel.
   c. All valves shall have a minimum working pressure rating of 200 psi.
   d. All valves shall have mechanical joint ends conforming to ANSI A21.10, A21.11.
   e. Valves shall open right (clockwise) with a standard 2-inch square operating nut with arrow cast on it showing the direction of opening.
   f. Valve shall operate using traveling nut.
   g. The valve disk shall hold at any position without fluttering or creeping.
   h. The valve shall be equipped with a mechanical stop to prevent overtravel.
   i. Each valve shall be furnished complete with necessary nuts, bolts, studs, and gaskets which conform to AWWA C-110, AWWA C-111.
3. Fire Hydrants shall be Mueller A-423 compression-type hydrant, or approved equal having the following features
   a. 5 1/4-inch valve opening with a 6-inch inlet.
   b. Two (2) 2 1/2-inch hose nozzle and one (1) 4" Storz pumper nozzle; national standard thread.
   c. Operating nut shall be national standard, pentagon shaped, 1/8-inch point to flat.
   d. Break flange – traffic type construction
   e. Open right (clockwise)
   f. Hydrants are to be painted a minimum of one (1) coat primer and one (1) finish coat of industrial enamel as per paint schedule.

F. Water mains and services shall be installed at a minimum cover depth below finished grade of 5'-0".

G. Chlorination, pressure and leakage tests of water mains shall be in conformance with the specifications, NYSDOH regulations, and AWWA Standards and shall be performed under the supervision of the Owner's Representative and City Engineer. Bacteria examination after disinfection at a NYSDOH approved laboratory will take place prior to turning water main over to the Owner.

H. Water valve boxes, existing structure rims, new structure rims, etc., shall be adjusted to conform to new finished pavement grades unless otherwise noted and/or directed by Owner's Representative.

SEWER SYSTEM NOTES

1. Installation of polyvinyl chloride plastic (PVC) sewer pipe shall be in accordance with manufacturer's installation recommendations, and in accordance with ASTM D 2321.
2. Manhole frames and covers shall be Campbell Foundry Co. pattern No. 12038 or approved equal. The cover shall be embossed with "City of Saratoga Springs Sanitary Sewer". Provide (4) 7/8" dia. vent holes in cover.
3. Sanitary sewer manholes shall be precast reinforced concrete, complying with ASTM C 478. Base section to be pre-cast with integral floor. Top section shall be precast eccentric cone or flat slab traffic top as required. Steps of copolymer polypropylene integrally cast into the manhole sidewalls. Pipe to manhole connection shall be "Press-Wedge II" seal, or approved equivalent.
4. All sewer piping and fittings shall conform to the Standard Specifications for PVC pipe, ASTM designation D-3034-78 or latest revision and to the dimensions and tolerances of classification SDR-26 with single gasket push-on joints.
5. Product data information and shop Drawings for materials proposed for use by the contractor shall be submitted to and approved by the Architect prior to the placement of any orders for said materials.
6. Leakage outward or inward shall not exceed 200 gallons per inch of pipe diameter per mile per day for any section of the system. Leakage test shall be performed with a minimum positive head of 2 feet.

LEGEND

- EXISTING CONTOUR LINE
- PROPOSED CONTOUR LINE
- EXISTING STORM MAIN
- PROPOSED STORM MAIN
- PROPOSED BUILDING DRAINAGE LINES
- PROPOSED DRYWELL
- PROPOSED CATCH BASIN
- EXISTING SANITARY SEWER MANHOLE
- PROPOSED SANITARY SEWER MANHOLE
- EXISTING SANITARY SEWER MAIN LINE
- PROPOSED SANITARY SEWER MAIN LINE
- PROPOSED WATER LINE

GRAPHIC SCALE
10 0 5 10 20
1 inch = 10 feet

Approval

Approved under authority of a resolution adopted _____ by the Planning Board of the City of Saratoga Springs.

_____ Chairperson

Date Signed _____

the LA group
Landscape Architecture and Engineering, PC
40 Long Alley
Saratoga Springs
New York 12866
P 518/587-8100
F 518/587-0180
www.thelagroup.com

Unauthorized alteration or addition to this document is a violation of Section 7209 of the New York State Education Law

© the LA Group 2008

Design MCB
Drawn MCB
Checked CMI

PREPARED FOR:
John-Paul Builders, LLC
796 Burdeck Street
Schenectady, NY 12306

246 WEST AVENUE APARTMENTS

SARATOGA SPRINGS, NY

Title
SITE UTILITY PLAN

Revisions

City #:
Project: 201178
Date: 6/23/2016

Drawing
L-4

Plotted By: MATT BROBSTON
Save Date: 6/22/2016 5:19 PM
File Name: G:\Proj-2011\201178_West_Ave_246\201178CAD\L-4-1_OFFSITE_UTIL.dwg

WATER SYSTEM NOTES

A. The location of underground utilities shown on this plan are for information only, and all utilities may not be shown. The Contractor shall contact U.F.P.O. (1-800-962-7962) and the proper local authorities or respective utility company having jurisdiction to field verify the location of all existing utilities before commencing work. Any costs incurred by the Contractor due to failure to contact the proper authorities shall become the responsibility of the Contractor.

B. Extend designated limit of work as necessary to accomplish site utility work as required by these Drawings and Specifications.

C. Water Service lines 4-inch and larger:

1. Pipe and Fittings
   a. Ductile Iron Pipe: Class 52, ANSI/AWWA C151/A21.51
   b. Mechanical Joint fittings: ANSI standard A21.10 and A21.11 (AWWA C110 and C111) Class 350.

2. Coatings
   a. Double cement mortar lining on interior and coal tar seal coat on interior and exterior in accordance with ANSI/AWWA C104/A21.11

3. Joints
   a. Conforming with ANSI/AWWA C111/A21.11
   b. Pipe – push on joint.
   c. fittings – mechanical joint, plain rubber gasket together with retainer glands having steel set screws.

4. Valve Boxes
   a. Cast iron two piece valve box as manufactured by Clow (Model F2454), or approved equal.
   b. Cover must be stay-put type (Clow Model F2490), or approved equal, and be clearly marked "Water."

5. Anchorage
   a. Concrete thrust blocks must be used at all changes in direction of 11 1/4° or greater, and at all tees, caps, fittings, hydrants and plugs.

D. Water service lines 2 1/2-inch and smaller (no line shall be smaller than 3/4-inch):

1. Pipe
   a. Copper water tube, type K, soft temper for underground service.

2. Corporation Stops
   a. Mueller H-15008 with AWWA inlet threads or approved equal.
   b. Valves 1 1/2-inch and larger must be used with tapping sleeve.

3. Curb-stop
   a. Mueller H-15209 or H-15219 curb-stops, non-draining or approved equal.

4. Couplings
   a. Mueller H-15403 110 compression connections or approved equal; three part union for copper-to-copper type connection.

5. Curb-box
   a. Mueller H-10314
   b. Extension type with arch pattern base or approved equal.
   c. Solid cover (Mueller or approved equal).
   d. Stationary rod.

E. Valves, Hydrants, etc.:

1. Valves – Mueller A-2380-20
   a. All valves under 12-inches in diameter shall be mechanical joint resilient wedge (R/W).
   b. R/W valves, 3-inches and larger, shall be iron body, non-rising stem conforming to AWWA C509. Gland bolts shall be zinc coated steel.
   c. All valves shall have a maximum working pressure rating of 200 psig.
   d. All valves shall have mechanical joint ends conforming to ANSI A21.10/A21.11
   e. Valves shall open right (clockwise) with a standard 2-inch square operating nut with arrow cast on it showing the direction of opening.
   f. Each valve shall be furnished complete with necessary nuts, bolts, studs and gaskets.

2. Butterfly Valves – Mueller Lineseal III
   a. With the exception of tapping valves, all valves 12-inches in diameter and larger shall be Mueller, or approved equal, butterfly valves.
   b. Butterfly valves, 12-inches and larger, shall be iron body, bronze mounted, 360-degree rubber seat with stainless steel shaft conforming to AWWA C504. gland bolts shall be zinc coated steel.
   c. All valves shall have a minimum working pressure rating of 200 psi.
   d. All valves shall have mechanical joint ends conforming to ANSI A21.10, A21.11.
   e. Valves shall open right (clockwise) with a standard 2-inch square operating nut with arrow cast on it showing the direction of opening.
   f. Valve shall operate using traveling nut.
   g. The valve dish shall hold at any position without fluttering or creeping.
   h. The valve shall be equipped with a mechanical stop to prevent overtravel.
   i. Each valve shall be furnished complete with necessary nuts, bolts, studs, and gaskets which conform to AWWA C-110, AWWA C-111.

3. Fire Hydrants shall be Mueller A-423 compression-type hydrant, or approved equal having the following features
   a. 5 1/4-inch valve opening with a 6-inch inlet.
   b. Two (2) 2 1/2-inch hose nozzle and one (1) 4" Storz pumper nozzle; national standard thread.
   c. Operating nut shall be national standard, pentagon shaped, 1/8-inch point to flat.
   d. Break flange – traffic type construction
   e. Open right (clockwise)
   f. Hydrants are to be painted a minimum of one (1) coat primer and one (1) finish coat of industrial enamel as per paint schedule.

F. Water mains and services shall be installed at a minimum cover depth below finished grade of 5'-0".

G. Chlorination, pressure and leakage tests of water mains shall be in conformance with the specifications, NYSDOH regulations, and AWWA Standards and shall be performed under the supervision of the Owner's Representative and City Engineer. Bacteria examination after disinfection at a NYSDOH approved laboratory will take place prior to turning water main over to the Owner.

H. Water valve boxes, existing structure rims, new structure rims, etc., shall be adjusted to conform to new finished pavement grades unless otherwise noted and/or directed by Owner's Representative.

1 WATER AND STORM DRAIN CROSSING DETAIL
SCALE: NTS

SEWER SYSTEM NOTES

1. Installation of polyvinyl chloride plastic (PVC) sewer pipe shall be in accordance with manufacturer's installation recommendations, and in accordance with ASTM D 2321.

2. Manhole frames and covers shall be Campbell Foundry Co. pattern No. 1203B or approved equal. The cover shall be embossed with "City of Saratoga Springs Sanitary Sewer". Provide (4) 7/8" dia. vent holes in cover.

3. Sanitary sewer manholes shall be precast reinforced concrete, complying with ASTM C 478. Base section to be pre-cast with integral floor. Top section shall be precast eccentric cone or flat slab traffic top as required. Steps of copolymer polypropylene integrally cast into the manhole sidewalls. Pipe to manhole connection shall be "Press-Wedge II" seal, or approved equivalent.

4. All sewer piping and fittings shall conform to the Standard Specifications for PVC pipe, ASTM designation D-3034-78 or latest revision and to the dimensions and tolerances of classification SDR-26 with single gasket push-on joints.

5. Product data information and shop Drawings for materials proposed for use by the contractor shall be submitted to and approved by the Architect prior to the placement of any orders for said materials. Copy City engineer on shop drawings/ submittals

6. Leakage outward or inward shall not exceed 200 gallons per inch of pipe diameter per mile per day for any section of the system. Leakage test shall be performed with a minimum positive head of 2 feet.

NOTES PER SARATOGA COUNTY SEWER DISTRICT

1. SDR 26 PIPE WITH SDR 26/35 FITTINGS WILL BE USED FOR SERVICE LATERALS.
2. THE CONTRACTOR WILL CONTACT SCSD (518)664-7396 AT LEAST 48 HOURS BEFORE CONSTRUCTION BEGINS.
3. THE CONTRACTOR SHALL FIELD VERIFY AND CONFIRM GRADES OF EXISTING MANHOLES BEFORE CONSTRUCTION BEGINS.
4. NO DISCHARGE OF FLOWS WILL BE ALLOWED UNTIL FINAL APPROVAL OF THE PROJECT HAS BEEN GRANTED.

Approval
Approved under authority of a resolution adopted by the Planning Board of the City of Saratoga Springs.
______________ Chairperson
Date Signed ______________

the LA group
Landscape Architecture and Engineering, PC
40 Long Alley
Saratoga Springs
New York 12866
P 518/587-8100
F 518/587-0180
www.thelagroup.com

Unauthorized alteration or addition to this document is a violation of Section 7209 of the New York State Education Law

© the LA Group 2008

Design	MCB
Drawn	MCB
Checked	CMI

PREPARED FOR:
John-Paul Builders, LLC
796 Burdeck Street
Schenectady, NY 12306

246 WEST AVENUE APARTMENTS
SARATOGA SPRINGS, NY

Title
OFF-SITE WATERLINE CONNECTION

Revisions

City #:
Project: 201178
Date: 6/23/2016

Drawing
L-4.1

LANDS OF
DAVID E. FRANTZ & CAROL A.
FRANTZ

5 AC | 3 PA | 5 AC | 6 PA | 4 AC | 7 PA

LAWN

7 PS

EXISTING CEDAR TREES
TO BE TRANSPLANTED

LAWN

LAWN

LAWN

LAWN

41

42

43/44

45

46/47

Rental cabins

Cedar trees

8 Rr

LANDS OF
THE YOUNG MEN'S CHRISTIAN
ASSOCIATION
OF SARATOGA SPRINGS

LAWN

LAWN

6 Ig

7 AR

3 MA

7 Bs

1 CC

TRANSPLANTED CEDAR TREES

LANDS OF
MORRIS D. STRAUSS, ESQ.
"ADIRONDACK INN"

LAWN

LAWN

Concrete sidewalk

Macadam sidewalk

LAWN

Concrete curb

Existing 36"dia

WEST AVENUE

PLANTING SCHEDULE

SYMBOL/KEY	QUANTITY	BOTANICAL NAME	COMMON NAME	SIZE	ROOT	COMMENTS
DECIDUOUS TREES						
AR	7	Acer rubrum Red Sunset	Red Sunset Red Maple	2 1/2 – 3" cal	B & B	
CC	1	Crataegus crusgalli inermis	Thornless cockspur hawthorn	2 1/2 – 3" cal	B & B	
Ms	3	Malus 'Cardinal'	Cardinal Crabapple	2 1/2 – 3" cal	B & B	Used small tree from zoning because of overhead wires
EVERGREEN TREES						
AC	14	Abies concolor	White Flr	6 – 7' ht	B & B	
PA	16	Picea Abies	Norway Spruce	6 – 7' ht	B & B	
PS	7	Pinus Strobus	White Pine	6 – 7' ht	B & B	
SHRUBS						
Bs	7	Buxus sempervirens	Common Boxwood	30 – 36"	B & B	
Ig	6	Ilex Glabra	Inkberry	18 – 24"	C.G.	
Rr	8	Rosa rugosa	Rose bush	24 – 30"	C.G.	

PLANTING NOTES

1. All new plant material shall conform to the minimum guidelines established by the American Standard for Nursery Stock Published by the American Association of Nurserymen, Inc.
2. All new plants to be balled and burlapped or container–grown unless otherwise noted on plant list.
3. Any proposed substitutions of plant species shall be made with plants of equivalent overall form, height, branching habit, flower, leaf, color, fruit and culture, and only as approved by the Owner's Representative.
4. All new plant material for the project shall be of specimen quality unless approved otherwise by Owner's Representative.
5. Where plants size is indicated as a range, the plants provided shall be a fair representation of that range.
6. The Contractor shall supply all new plant material in quantities sufficient to complete the planting shown on the Drawings.
7. Contractor shall obtain plant approval from Owner's Representative after delivery and prior to installation.
8. Lawn Mix:

% BY WEIGHT	SPECIES%	GERMINATION
30%	Tall Fescues	90%
20%	Hybrid Kentucky Blue	87%
50%	Turf–Type Perennial Rye	90%

9. Contractor shall locate and verify all existing utility lines prior to planting and shall report any conflicts to the Owner's Representative.
10. Stake location of all proposed planting for approval by the Owner's Representative prior to the commencement of planting.
11. New plant material shall bear same relationship to finished grade as it bore to previous grade in the nursery.
12. All plant beds to receive three inches (3") of bark mulch on weed barrier fabric or as per Specifications.
13. Prepare all planting beds to minimum overall depths shown on planting details.
14. Amended topsoil backfill shall consist of (1) part manure to (8) parts topsoil and bonemeal @ 20 lbs. to 4 cu. yds. topsoil.
15. All disturbed areas not scheduled for other work shall receive four inches (4") of suitable on–site or imported planting soil prior to seeding or sodding as specified.
16. Contractor shall guarantee all planted materials a minimum of 1 year time.
17. Contractor shall maintain all work including watering, mowing, and protection from traffic until final acceptance of the project.
18. Contractor is responsible to repair or replace all items damaged outside construction limits or disturbed on site which are not part of the identified work of this Contract.
19. Contractor to provide and maintain erosion control measures as shown on the plans and as required in the field. Remove upon stabilization of ground cover.

GRAPHIC SCALE
10 0 5 10 20
1 inch = 10 feet

Approval

Approved under authority of a resolution adopted _____ by the Planning Board of the City of Saratoga Springs.

_____ Chairperson

Date Signed _____

the LA group
Landscape Architecture
and Engineering, PC
40 Long Alley
Saratoga Springs
New York 12866
P 518/587-8100
F 518/587-0180
www.thelagroup.com

Unauthorized alteration or addition to this document is a violation of Section 7209 of the New York State Education Law

© the LA Group 2008

Design MCB
Drawn MCB
Checked CMI

PREPARED FOR:
John-Paul Builders, LLC
796 Burdeck Street
Schenectady, NY 12306

246 WEST AVENUE APARTMENTS

SARATOGA SPRINGS, NY

Title
SITE LANDSCAPE PLAN

Revisions

City #:
Project: 201178
Date: 6/23/2016

Drawing
L-5

Plotted By: MATT BROBSTON
Save Date: 6/23/2016 9:57 AM
File Name: G:\Projects\201178_West_Ave_JMB\2017\CAD\L-5_LAND.dwg

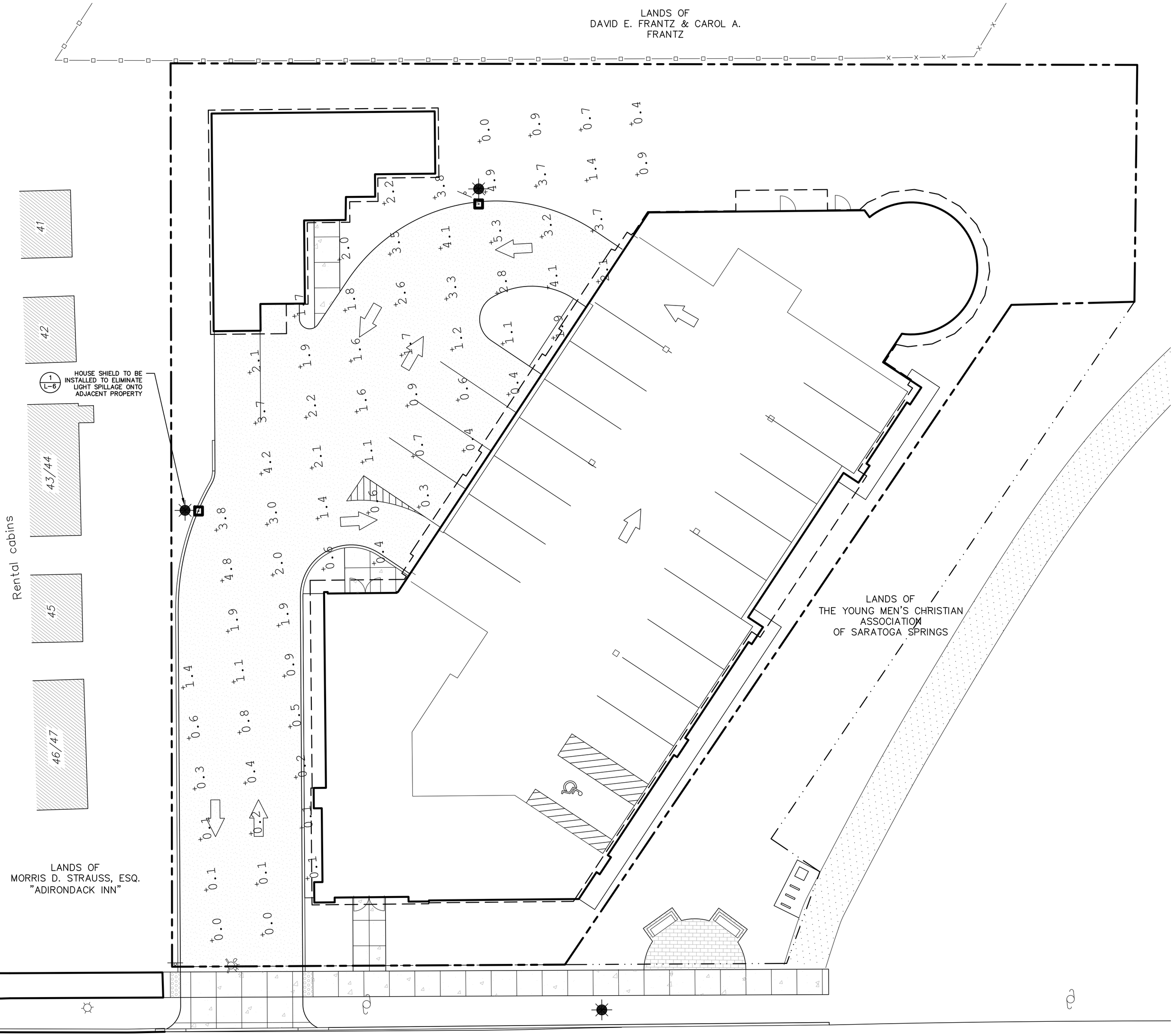

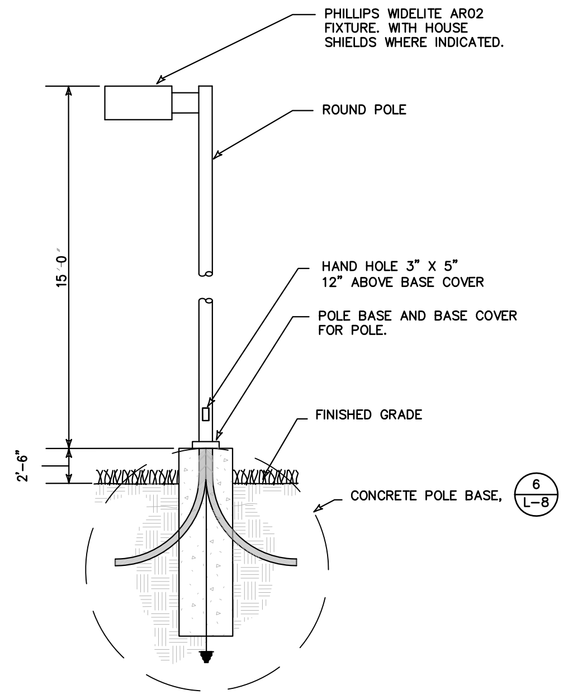

1 PARKING LOT LIGHT POLE DETAIL

SCALE: NTS

GRAPHIC SCALE

10 0 5 10 20

1 inch = 10 feet

Luminaire Schedule						
Symbol	Qty	Label	Arrangement	Total Lamp Lumens	LLF	Description
	2	AR02	SINGLE	13000	0.880	AR02-150H Type 2

Approval

Approved under authority of a resolution adopted _____ by the Planning Board of the City of Saratoga Springs.

_____ Chairperson

Date Signed _____

the LA group
Landscape Architecture and Engineering, PC
40 Long Alley
Saratoga Springs
New York 12866
P 518/587-8100
F 518/587-0180
www.thelagroup.com

Unauthorized alteration or addition to this document is a violation of Section 7209 of the New York State Education Law

© the LA Group 2008

Design MCB

Drawn MCB

Checked CMI

PREPARED FOR:
The PIKE Company, INC.
210 Clifton Corporate Parkway
Clifton Park, NY 12065

246 WEST AVENUE

RESIDENTIAL CONDOMINIUM COMPLEX
SARATOGA SPRINGS, NY

Title SITE LIGHTING PLAN

Revisions
MYLAR CHECK SET 9/28/2012
MYLAR SET NOVEMBER 2012
May 2014

City #: 12.006.1
Project: 201178
Date: 1/25/2012

Drawing L-6

Plotted By: MATT BRIDGESTON
Save Date: 1/16/2012 4:31 PM
File Name: G:\Proj\201\12\201178_West_Ave_246\201178CAD\L-6_LIGHT.dwg

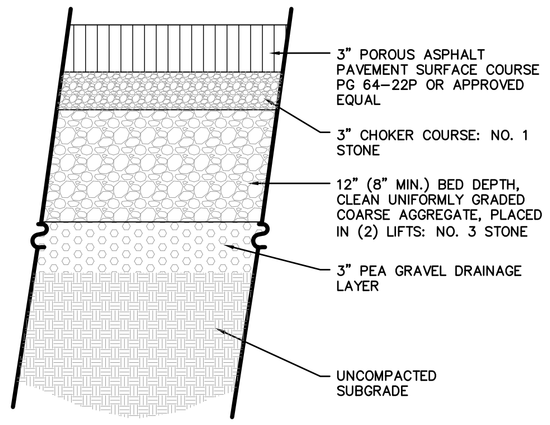

1 POROUS PAVEMENT

N.T.S.

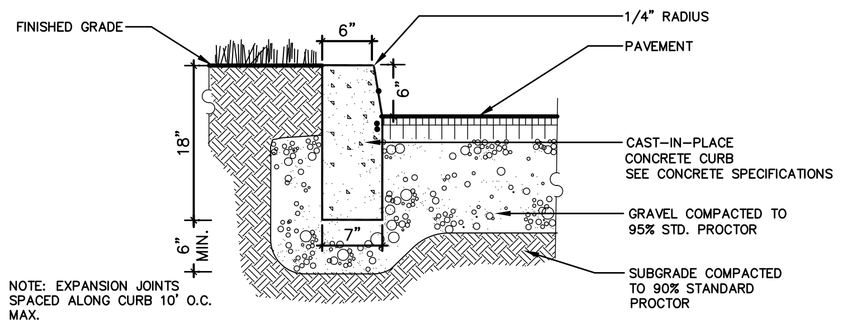

NOTE: EXPANSION JOINTS SPACED ALONG CURB 10' O.C. MAX.

2 CONCRETE CURB DETAIL

N.T.S.

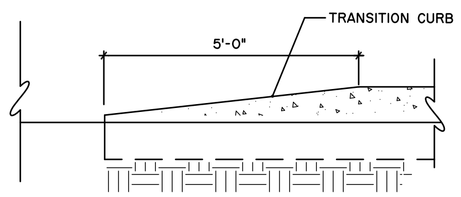

SECTION

3 CURB END TRANSITION DETAIL

N.T.S.

CITY OF SARATOGA SPRINGS

CONCRETE SPECIFICATIONS

THESE GENERAL CONCRETE SPECIFICATIONS SHALL APPLY TO ALL CONCRETE WORK WITHIN THE CITY OF SARATOGA SPRINGS INSTALLED WITHIN A CITY RIGHT-OF-WAY AND/OR WITHIN THE APPROVAL AUTHORITY OF THE PLANNING BOARD.

ALL CONCRETE THAT MAY COME IN CONTACT WITH DEICING CHEMICALS SHALL MEET OR EXCEED THESE MINIMUM SPECIFICATIONS.

CONCRETE SHALL BE ONLY PORTLAND CEMENT CONCRETE AIR-ENTRAINED OF DURABLE MATERIALS AND SHALL HAVE (1) A LOW WATER-CEMENT RATIO (MAXIMUM 0.46), (2) A SLUMP OF 4 INCHES OR LESS.* (3) A CEMENT CONTENT OF 606 LB PER CUBIC YARD OR MORE, (4) PROPER FINISHING AFTER BLEED WATER HAS EVAPORATED FROM THE SURFACE, (5) ADEQUATE DRAINAGE WITH A SLOPE OF 1/8 INCH PER LINEAR FOOT OR MORE, (6) A MINIMUM OF 7 DAYS MOIST CURING AT OR ABOVE 50 DEGREES F, (7) A MINIMUM COMPRESSIVE STRENGTH OF 4000 PSI AT 28 DAYS, AND (8) A MINIMUM 30-DAY DRYING PERIOD AFTER MOIST CURING IF CONCRETE IS PLACED IN THE FALL AND WILL BE EXPOSED TO FREEZE-THAW CYCLES AND DEICERS WHEN SATURATED. THE EXACT LENGTH OF TIME FOR SUFFICIENT DRYING TO TAKE PLACE MAY VARY WITH CLIMATE AND WEATHER CONDITIONS.

TECHNICAL SPECIFICATIONS FOR CONCRETE AS HEREIN DEFINED SHALL COMPLY WITH THE APPLICABLE SPECIFICATIONS OF THE "NEW YORK STATE DEPARTMENT OF TRANSPORTATION STANDARD SPECIFICATIONS CONSTRUCTION AND MATERIALS", 1985.

ANY CLARIFICATION, REVISIONS, MODIFICATIONS THERETO SHALL ONLY BE MADE SUBJECT TO APPROVAL OF THE CITY OF SARATOGA SPRINGS PLANNING BOARD.

*A SUPER PLASTICIZER MAY BE USED TO INCREASE SLUMP AND WORKABILITY WITHOUT INCREASING THE WATER-CEMENT RATIO.

4 CONCRETE SPECIFICATIONS

N.T.S.

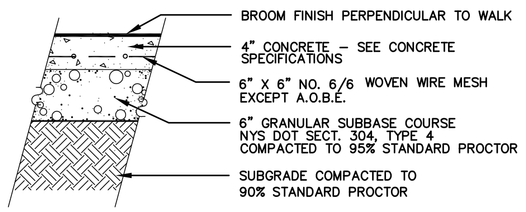

TYPICAL PEDESTRIAN LOADING

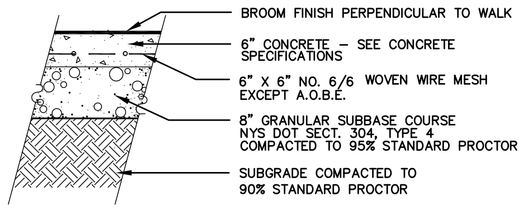

VEHICLE TRAFFIC LOADING

NOTES:

EXPANSION JOINT SPACING - 20'-25' O.C.
CONTROL JOINT SPACING - 5' O.C.
NOMINAL CROSS SLOPE - 1/8" TO 1/4" PER FOOT (MAX. SLOPE 1:50 TYP.) TOWARDS STREET OR A.O.B.E. MAX. SLOPE ALONG THE LENGTH OF

THE WALK SHOULD NOT EXCEED 1:12
CONSTRUCTION JOINT DETAILS TO BE SUBMITTED AND APPROVED BY CITY ENGINEER SIDEWALK WIDTH TO BE 5' MIN. OR AS ORDERED BY CITY ENGINEER

GENERAL DESIGN CRITERIA FOR CONSTRUCTING SIDEWALKS WITHIN SARATOGA SPRINGS RIGHT OF WAYS:

1.) SIDEWALKS MUST BE PLACED IN THE PUBLIC RIGHT OF WAY AT THE PROPERTY LINE.
2.) SIDEWALKS MUST NOT DROP DOWN WHEN CROSSING A DRIVEWAY.
3.) SIDEWALKS MUST NOT EXTEND ACROSS PUBLIC STREETS OR ALLEYS.

GENERAL DESIGN CRITERIA FOR CONSTRUCTING SIDEWALKS WITHIN SARATOGA COUNTY RIGHT OF WAYS WITHIN SARATOGA SPRINGS:

1.) ALL SIDEWALK INSTALLATIONS MUST BE DESIGNED BY A PROFESSIONAL ENGINEER. PLANS MUST BE APPROVED BY THE COUNTY COMM. OF PUBLIC WORKS.
2.) SIDEWALKS MUST BE PLACED ON THE BACK SIDE OF DITCHES OR 8'(MIN.) FROM THE EDGE OF SHOULDER.
3.) SIDEWALKS MUST BE CONSTRUCTED SO AS NOT TO INTERFERE WITH DRAINAGE.

5 CONCRETE PAVEMENT DETAIL

N.T.S.

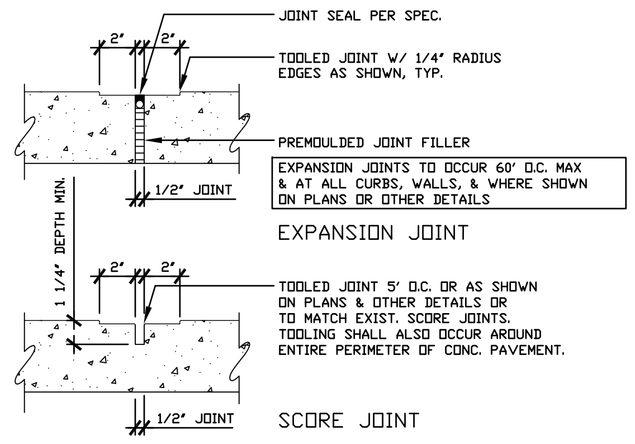

6 CONCRETE PVMT. EXPANSION SCORE JOINT DETAIL

N.T.S.

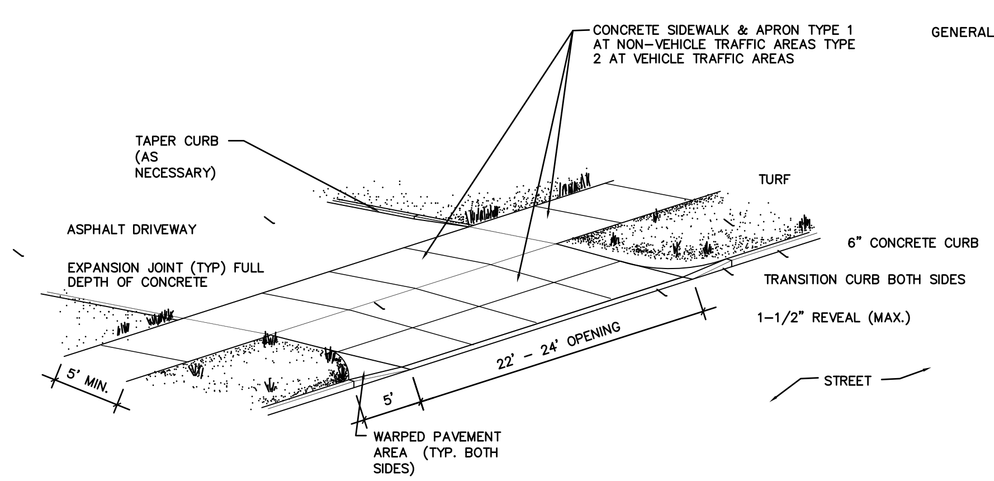

7 COMMERCIAL ENTRANCE DETAIL

N.T.S.

	TEXT	LETTER SIZE	LETTER TYPE	APPROX. SIZE OF SIGN	M.U.T.C.D. NO.
A	STOP	SEE M.U.T.C.D.		30"x30" 6.25 S.F.	R1-1C

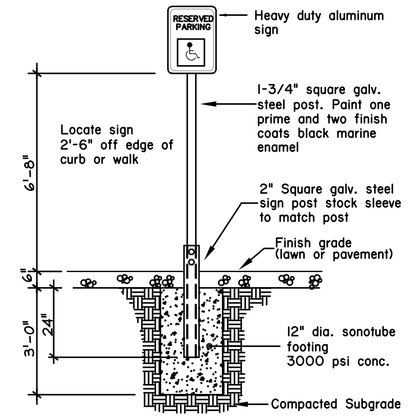

NOTE: OWNER TO APPROVE LOCATIONS PRIOR TO INSTALLATION.

SCHEDULE ELEVATION

8 TRAFFIC SIGN DETAIL / SIGN SCHEDULE

N.T.S.

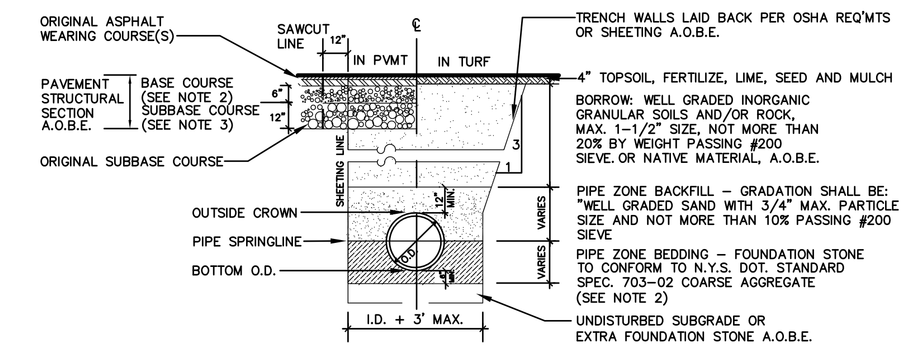

NOTES:

1. STREET OPENING PERMIT IS REQUIRED
2. FOUNDATION STONE - N.Y.S. DOT STD. SPEC. 703-02

   SIZE DETERMINATION #1: 100% PASSING 1" SIEVE, 90-100% PASSING 1/2" SIEVE, 0-15% PASSING 1/4" SIEVE

   OR

   SIZE DETERMINATION #2: 100% PASSING 1-1/2" SIEVE, 90-100% PASSING 1" SIEVE, 0-15% PASSING 1/2" SIEVE.

   GRADATION/SIZE DESIGNATION TO BE DETERMINED BY ENGINEER BASED ON FIELD CONDITIONS.
2. BASE COURSE FOR PAVEMENT: CONFORM TO N.Y.S. DOT STD. 703-02 WITH FOLLOWING MODIFICATIONS:

   2-1/2" SIEVE - PASS 100% BY WEIGHT
   1-3/4" SIEVE - PASS 95-100% BY WEIGHT
   3/4" SIEVE - PASS 60-75%
   1/4" SIEVE - PASS 25-45%
   #40 SIEVE - PASS 10-25%
   #100 SIEVE - PASS 3-12%
3. SUBBASE COURSE FOR PAVEMENT: CONFORM TO N.Y.S. DOT STD. 304-2, TYPE 4.
4. STRUCTURAL PAVEMENT SECTION SHOWN SHALL BE CONSTRUCTED IN LIEU OF PAVEMENT SECTION SHOWN ON DRAWING NO. P-4 A.O.B.E.

9 SANITARY PIPE TRENCH DETAIL

N.T.S.

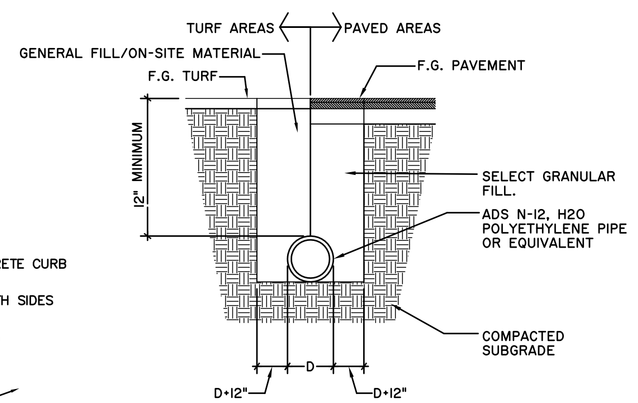

NOTE:
1. ADS N-12, HDPE PIPE REQUIRES A MINIMUM COVER OF 12" IN TRAFFIC AREAS AS PER MANUFACTURER'S SPECIFICATIONS. TO MEET AASHTO H-20 LOAD RATING.

10 PIPE TRENCH (STORM SYSTEM)

N.T.S.

Armor-Tile

Tactile Systems

ENGINEERED PLASTICS, INC.
300 INTERNATIONAL DR., SUITE 100
WILLIAMSVILLE, NY
USA, 14221
1 (800) 682-2525
PHONE: (716) 626-3626
FAX: 1 (800) 769-4463
www.armor-tile.com

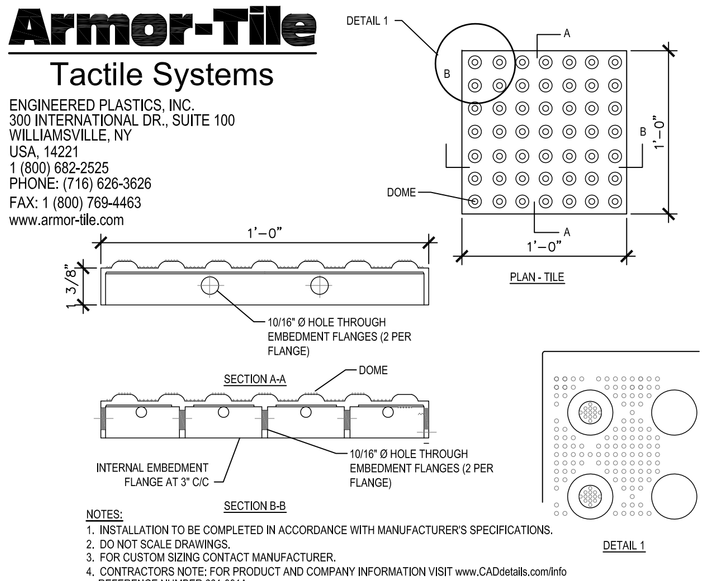

NOTES:
1. INSTALLATION TO BE COMPLETED IN ACCORDANCE WITH MANUFACTURER'S SPECIFICATIONS.
2. DO NOT SCALE DRAWINGS.
3. FOR CUSTOM SIZING CONTACT MANUFACTURER.
4. CONTRACTORS NOTE: FOR PRODUCT AND COMPANY INFORMATION VISIT www.CADdetails.com/info REFERENCE NUMBER 681-001A.

11 TACTILE WARNING STRIP

N.T.S.

Approval

Approved under authority of a resolution adopted _____ by the Planning Board of the City of Saratoga Springs.

_____ Chairperson

Date Signed _____

the LA group
Landscape Architecture and Engineering, PC
40 Long Alley
Saratoga Springs
New York 12866
P 518/587-8100
F 518/587-0180
www.thelagroup.com

Unauthorized alteration or addition to this document is a violation of Section 7209 of the New York State Education Law

© the LA Group 2008

Design MCB
Drawn MCB
Checked CMI

PREPARED FOR:
The PIKE Company, INC.
210 Clifton Corporate Parkway
Clifton Park, NY 12065

246 WEST AVENUE
RESIDENTIAL CONDOMINIUM COMPLEX
SARATOGA SPRINGS, NY

Title SITE DETAILS

Revisions
MYLAR CHECK SET 9/28/2012
MYLAR SET NOVEMBER 2012
May 2014

City #: 12.006.1
Project: 201178
Date: 1/25/2012

Drawing L-7

Plotted By: MATT BROBSTON
Save Date: 11/16/2012 5:11:11 PM
File Name: G:\Projects\201178_West_Ave_246\2011\TRCAD\L7_DETS.dwg

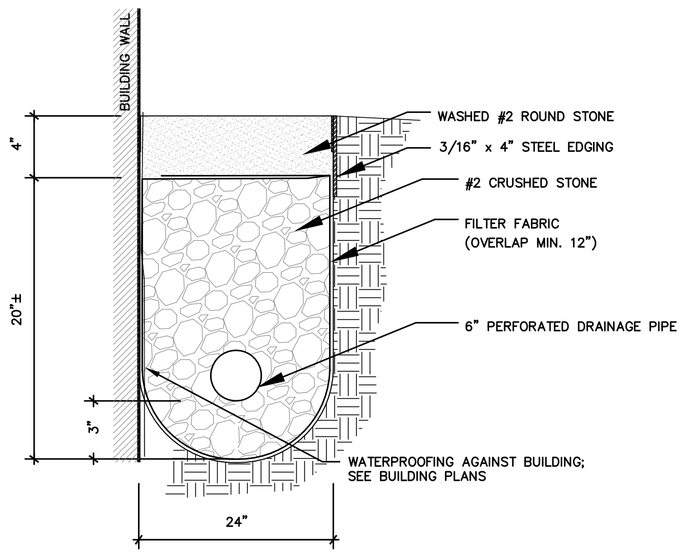

1 PERFORATED DRAINAGE TRENCH DETAIL

N.T.S.

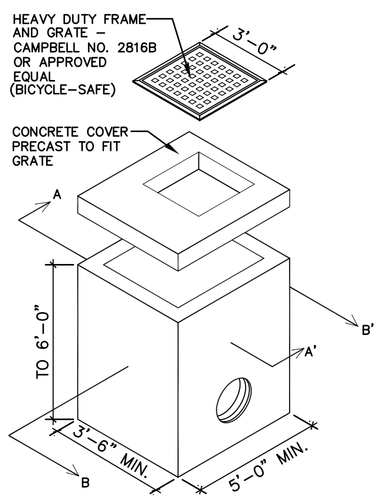

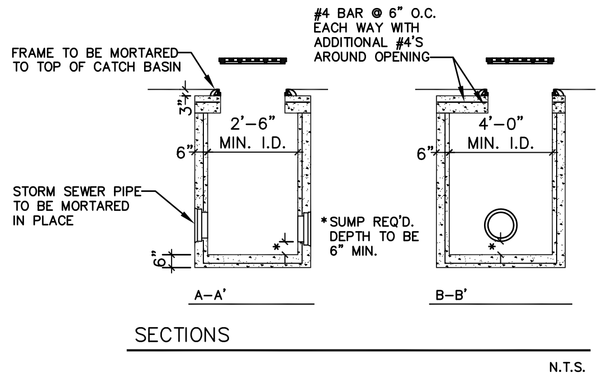

SECTIONS

N.T.S.

CONCRETE – 4000 PSI @ 28 DAYS
MIN. REINFORCMENT – 6x6 – 10/10 WWM
ALL FOUR SIDES AND BOTTOM
(CONFORM TO ASTM STD. A–615)

2 CATCH BASIN DETAIL

N.T.S.

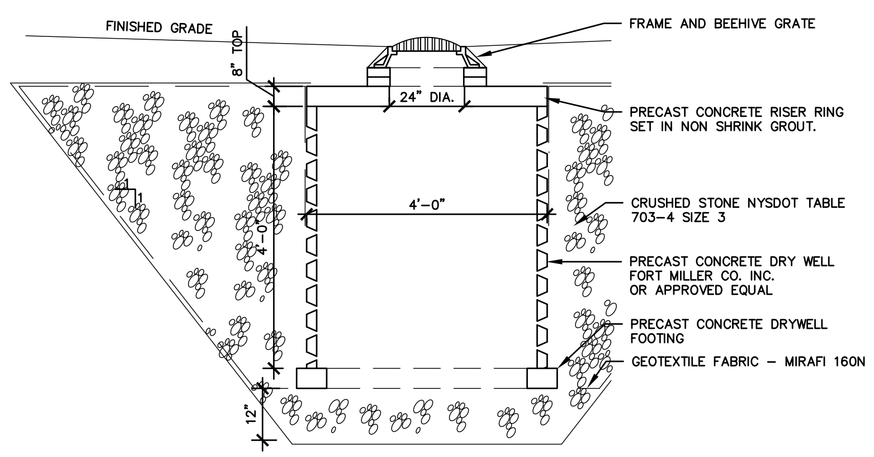

3 DRYWELL DETAIL

N.T.S.

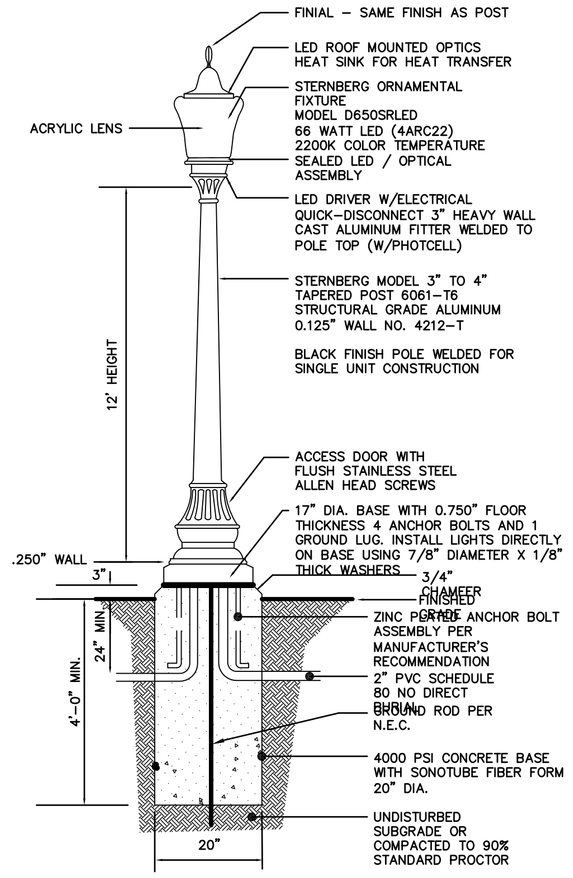

NOTES:

1. INSTALLATION OF DECORATIVE LIGHTS SHALL BE COORDINATED WITH THE CITY ELECTRICIAN AND DEPARTMENT OF PUBLIC WORKS. (USE 120V POWER)
2. THE OWNER/DEVELOPER IS RESPONSIBLE FOR ELECTRIFYING THE SYSTEM AND PAYING THE ELECTRIC BILLS UNTIL ACCEPTED AND TAKEN OVER BY THE CITY OF SARATOGA SPRINGS.
3. ELECTRIC SERVICE: SWEEPS AT CONCRETE BASES AND BETWEEN BASES USE 2" SCHEDULE 40 PVC NON–METALLIC CONDUIT, UNLESS UNDER DRIVEWAYS WHERE SCHEDULE 80 PVC IS REQUIRED. FOR WIRE: THHN COPPER STRANDED NUMBER 6 COLORED RED, WHITE, AND GREEN. LIGHTS ARE WIRED 120 VOLTS. PROVIDE A SEPARATE HANDHOLD, SYNERTECH SYN12121PH02, TO BE OWNED BY THE CITY FOR THE DISCONNECT NEAR THE BASE OF THE ELECTRIC POLE OR BOX AT THE BEGINNING OF SERVICE. PROVIDE AND INSTALL (1) 5/8 INCH COPPER GROUND ROD IN HANDHOLE. WIRE AND CONDUIT FROM HANDHOLE TO POLE OR BOX PER NATIONAL GRIDS'S STANDARDS. IF CONNECTING ONLY ONE LIGHT PROVIDE WATERTIGHT FUSEHOLDER, FERRAZ SHAWMUT FEB–21–21 1P 600V WITH 5 AMP FUSE WITH INSULATOR BOOTS PART FRZ FSB1 IN HANDHOLE FOR FUSING THE POWER WIRE. IF CONNECTING MORE THAN ONE LIGHT PUT A 30 AMP FUSE IN WATERTIGHT FUSEHOLDER IN HANDHOLD AND PROVIDE SEPARATATE FUSE HOLDERS, BUSSMAN HEB–AA FUSEHOLDER WITH 5 AMP FUSE, IN BASE OF EACH LAMP. RUN #12 THHN COPPER, (RED WHITE AND GREEN) FROM BASE TO TOP OF LIGHT USE POLARIS CONNECTORS FOR CONNECTIONS IN HANDHOLE AND IN BASE OF LIGHTS. THE LIGHT IS TO BE MOUNTED DIRECTLY ONTO CONCRETE BASE USING FENDER WASHERS. 2 INCH OD 1/2 INCH ID AND 1/8 INCH THICKNESS AND LOCK WASHERS

4 DECORATIVE STREET LIGHT DETAIL

N.T.S.

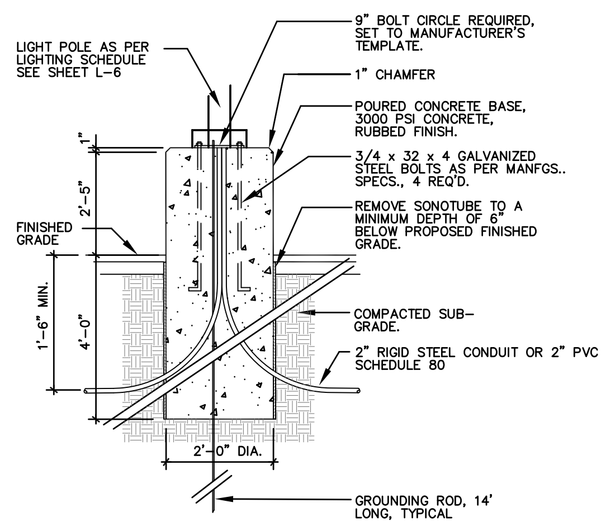

6 LIGHT POLE BASE – PEDESTAL DETAIL

N.T.S.

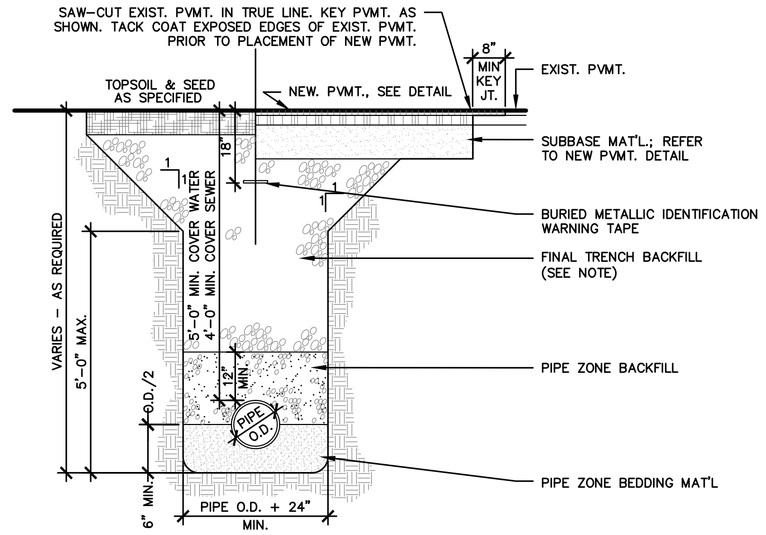

ITEM	DEPTH	MATERIAL	NYSDOT TYPE	METHOD OF PLACEMENT
PIPE ZONE BEDDING	6" MIN.	ANGULAR CRUSHED STONE	1&2	MECHANICAL COMPACTION
PIPE ZONE BACKFILL	12" MIN. COVER	CLEAN SAND OR GRAVEL	1A OR 1	MECHANICAL COMPACTION
FINAL TRENCH BACKFILL	VARIES	SEE NOTE	SEE NOTE	MECHNANICAL COMPACTION

NOTES:
1. FINAL TRENCH BACKFILL
   1.a. IN NON–PAVED AREAS, FINAL TRENCH BACKFILL SHALL BE EXCAVATED MATERIAL WHEN DETERMINED SUITABLE BY THE ENGINEER OF RECORD; OTHERWISE IT SHALL BE NYSDOT TYPE 1 (ITEM NO. 304.02). MIN. MOD. PROCTOR DENSITY SHALL BE 85 PERCENT.
   1.b. IN PAVED AREAS, FINAL TRENCH BACKFILL SHALL BE NYSDOT TYPE 1 (ITEM NO. 304.02). MIN. MODIFIED PROCTOR DENSITY SHALL BE 95 PERCENT.
2. ALL PIPE ZONE BEDDING, PIPE ZONE BACKFILL, AND FINAL TRENCH BACKFILL SHALL BE PLACED IN 6 INCH MAX. COMPACTED LIFTS. ALL BEDDING AND BACKFILL MATERIALS SHALL BE MECHANICALLY COMPACTED TO THE SATISFACTION OF THE ENGINEER.
3. EXCAVATION SHALL BE KEPT DRY AND DEWATERED AT ALL TIMES.

7 PIPE TRENCH-SECTION

SCALE: NTS

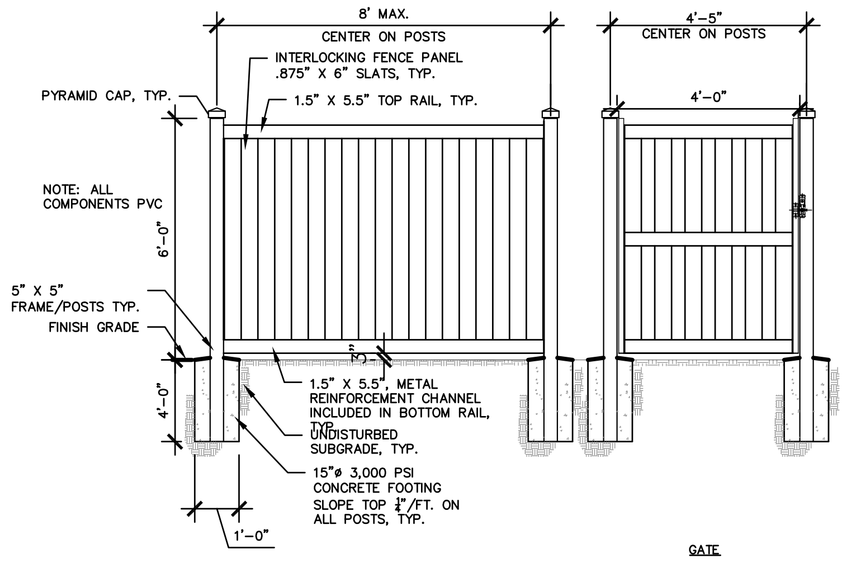

8 DUMPSTER PAD ENCLOSURE

SCALE: NTS

Approval

Approved under authority of a resolution adopted
by the Planning Board of the City of Saratoga Springs.

Chairperson

Date Signed

the LA group
Landscape Architecture
and Engineering, PC
40 Long Alley
Saratoga Springs
New York 12866
P 518/587-8100
F 518/587-0180
www.thelagroup.com

Unauthorized alteration or addition to this document is a violation of Section 7209 of the New York State Education Law

© the LA Group 2008

Design MCB
Drawn MCB
Checked CMI

PREPARED FOR:
John-Paul Builders, LLC
796 Burdeck Street
Schenectady, NY 12306

246 WEST AVENUE APARTMENTS

SARATOGA SPRINGS, NY

Title SITE DETAILS

Revisions

City #:
Project: 201178
Date: 6/23/2016

Drawing L-8

Plotted By: MATT BRIDBSTON
Save Date: 6/23/2016 10:10 AM
File Name: G:\Projects\1501\15_West_Ave_246\2015TRCADs\Z_DETS.dwg

NOTES:

MAINS SHALL BE VALVED TO INSURE THAT WATER FLOW IS NOT INTERRUPTED TO MORE THAN TWO HYDRANTS AT ANY GIVEN TIME.

ALL HYDRANTS AND VALVES SHALL OPEN RIGHT.

PAINT SCHEDULE:

SIZE OF MAIN	COLOR OF BONNET AND CONNECTOR COVERS	COLOR OF BARREL
6"	BLUE	YELLOW
8"	GREEN, FOREST	YELLOW
10"	BROWN	YELLOW
12"	GRAY, BATTLESHIP	YELLOW
14"	GREEN, LIGHT	YELLOW
16"	ORANGE	YELLOW
20"	BLACK	YELLOW
24"	YELLOW	YELLOW

1 FIRE HYDRANT DETAIL

N.T.S.

NOTE:
RETAINING GLANDS ACCEPTABLE FOR USE AS APPROVED BY CITY ENGINEER.

NOTES:
1. FOR REQUIRED BEARING AREA AND DIMENSIONS L & D, SEE SCHEDULE BELOW. VALUES OF L & D OTHER THAN THOSE SHOWN IN THE TABLE MAY BE USED PROVIDED THEY YIELD A BEARING AREA EQUAL TO OR LARGER THAN REQUIRED.
2. CONC. NOT TO OVERLAP ANY JOINT.
3. CONCRETE TO BE PLACED SO AS NOT TO INTERFERE W/ REMOVING OR INSTALLING ANY OF THE JOINTING HARDWARE.
4. BEARING AREAS FOR THRUST BLOCKS FOR WATER MAINS LARGER THAN 12" DIA. TO BE APPROVED BY CITY ENGINEER.
5. APPROXIMATE VOLUME OF CONCRETE THRUST BLOCK:

$$V\pm = \frac{LD\ (W + I.D.) - I.D.}{81}$$

WHERE:
V = VOLUME IN CUBIC YARDS
L = LENGTH OF BLOCK IN FEET
D = DEPTH OF BLOCK IN FEET
W = WIDTH OF BLOCK IN FEET
I.D. = INSIDE DIAMETER OF PIPE IN FEET

6. REQUIRED BEARING AREAS ARE BASED ON ALLOWABLE SOIL BEARING CAPACITY OF 2000 p.s.i. W/ A SAFETY FACTOR OF 1.7. PRESSURE OF FLUID FLOW IS BASED ON A 300' HEAD.
7. IN MUCK, PEAT OR RECENTLY PLACED FILL ALL THRUST SHALL BE RESISTED BY PILES OR TIE RODS TO SOLID FOUNDATIONS, OR BY REMOVAL OR SUCH UNSTABLE MATERIAL & REPLACEMENT W/ BALLAST OF SUFFICIENT STABILITY TO RESIST THRUSTS, ALL AS REQUIRED BY THE ENGINEER.

REQUIRED BEARING AREAS & DIMENSIONS FOR CONCRETE THRUST BLOCKS

	TEE		90° (1/4) BEND		45° (1/8) BEND		22-1/2° (1/16) BEND		11-1/4° (1/32) BEND	
PIPE SIZE INCHES	AREA SQ. FT.	DIMENSIONS D x L	AREA SQ. FT.	DIMENSIONS D x L	AREA SQ. FT.	DIMENSIONS D x L	AREA SQ. FT.	DIMENSIONS D x L	AREA SQ. FT.	DIMENSIONS D x L
6	4.21	1.8 x 2.5	5.96	2.0 x 3.0	3.22	1.5 x 2.3	1.65	1.3 x 1.5	0.83	0.83 x 1.3
8	7.24	2.5 x 3.0	10.24	2.8 x 3.8	5.54	2.3 x 2.5	2.82	1.5 x 1.5	1.42	1.0 x 1.5
10	10.89	2.8 x 4.0	15.40	3.3 x 4.8	8.33	2.5 x 3.5	4.25	1.8 X 2.5	2.14	1.3 x 2.0
12	12.40	3.5 x 4.5	21.77	4.5 x 5.0	11.78	3.0 x 4.0	6.01	2.3 x 2.8	3.02	1.5 x 2.3
16	26.75	4.8 x 5.8	37.83	5.8 x 6.8	20.48	4.0 x 5.3	10.44	2.8 x 4.0	5.25	2.3 x 2.5

NOTES:
1. VALUES FOR TEES APPLY TO TEES, END PLUGS, CAPS, AND TAPPING SLEEVES.
2. MINIMUM REQUIRED BEARING AREAS ARE DUE TO THRUSTS CAUSED BY 150 P.S.I. WORKING PRESSURE PLUS 50% (75 P.S.I) SURGE ALLOWANCE RESULTING IN 225 P.S.I. INTERNAL PRESSURE.
3. REQUIRED BEARING AREAS ARE BASED ON ALLOWABLE SOIL BEARING CAPACITY OF 2000 POUNDS PER SQUARE FOOT FOR SAND. DUE TO OTHER SOIL CONDITIONS WHICH MAY BE ENCOUNTED DURING THE WORK, THRUST BLOCK BEARING AREAS MAY BE MODIFIED BY THE ENGINEER OF RECORD BY MULTIPLYING THE MINIMUM REQUIRED BEARING AREA GIVEN IN THE TABLE ABOVE FOR THE APPROPRIATE PIPE SIZE AND FITTING BY THE CORRECTION FACTORS BELOW. THE CONTRACTOR SHALL NOTIFY THE ENGINEER CONCERNING ENCOUNTERED SOIL CONDITIONS WHICH ARE NOT SAND. THE CONTRACTOR SHALL NOT MODIFY THE REQUIRED THRUST BLOCK SIZES WITHOUT THE ENGINEER'S WRITTEN APPROVAL.

INSITU SOIL CONDITION	ALLOWABLE SOIL PRESSURE (LBS./SQ.FT.)	CORRECTION FACTOR
SOFT CLAY	1000	2.00
SAND	2000	1.00
SAND & GRAVEL	3000	0.67
CEMENTED W/CLAY	4000	0.50
HARD SHALE	10,000	0.20

4. IN MUCK, PEAT, OR RECENTLY PLACED FILL ALL THRUSTS SHALL BE RESISTED BY STEEL PILES OR TIE ROD ANCHORAGE TO SOLID APPROVED FOUNDATIONS, OR BY REMOVAL OF SUCH UNSTABLE MATERIAL AND REPLACEMENT WITH BALLAST OF SUFFICIENT STABILITY TO RESIST THE THRUSTS, ALL AS REQUIRED BY THE ENGINEER. ALL PROPOSED PILE CONFIGURATIONS THE CONTRACTOR WISHES TO UTILIZE IN THE WORK SHALL BE DESIGNED AND CERTIFIED BY A QUALIFIED NEW YORK STATE LICENSED PROFESSIONAL ENGINEER HIRED BY THE CONTRACTOR. THE COST OF SAID PROFESSIONAL ENGINEERING SERVICES SHALL BE PAID BY THE CONTRACTOR AT NO ADDITIONAL COST TO THE OWNER. ALL PILE CONFIGURATIONS AND RESPECTIVE ENGINEERING COMPUTATIONS (AND ANY OTHER SUPPORTING DOCUMENTATION AS DEEMED NECESSARY BY THE ENGINEER OF RECORD), AS PROPOSED BY THE CONTRACTOR, SHALL BE SUBMITTED TO THE ENGINEER OF RECORD FOR CONTENT REVIEW AND COMMENT; ALL SUBMITTALS SHALL DEPICT A SIGNED AND DATED LICENSED PROFESSIONAL ENGINEER'S SEAL BELONGING TO THE ENGINEER HIRED BY THE CONTRACTOR.
5. ALL CAST-IN-PLACE CONCRETE THRUST BLOCKS SHALL BE CONSTRUCTED OF 3,000 PSI MINIMUM CONCRETE HAVING A MAXIMUM WATER-TO-CEMENT RATIO OF 0.44, A MINIMUM CEMENT CONTENT OF 630 POUNDS PER CUBIC YARD AND A MAXIMUM SLUMP OF 4 INCHES AT POINT OF PLACEMENT. ALL CONCRETE THRUST BLOCKS SHALL BEAR AGAINST UNEXCAVATED/UNDISTURBED VIRGIN SOIL OF THE PIPE TRENCH VERTICAL WALL. ALL THRUST BLOCK BEARING AREAS SHALL BE BASED ON THE ACTUAL CONTACT AREA OF THE THRUST BLOCK AGAINST THE VERTICAL TRENCH FACE; CONTACT AREAS OF THRUST BLOCKS AGAINST SLOPED TRENCH WALL FACES WILL NOT UTILIZED IN COMPUTING CONTACT AREAS.
6. CONCRETE UTILIZED FOR CONSTRUCTING THRUST BLOCKS SHALL NOT OVERLAP ANY PIPE JOINT, FITTING/PIPE JOINT, MECHANICAL JOINT RETAINER GLAND AND FERROUS-BASED RESTRAINT ANCHORAGE ASSEMBLIES.
7. CONCRETE THRUST BLOCKS SHALL BE PLACED IN SUCH A MANNER SO AS NOT TO INTERFERE WITH ANY FUTURE REMOVAL AND/OR MAINTENANCE OF FITTING RESTRAINT HARDWARE. ALL PIPE FITTINGS RECEIVING CONCRETE THRUST BLOCKS SHALL BE WRAPPED WITH 6-MIL MINIMUM POLYETHALENE PLASTIC SHEETS TO PREVENT CONCRETE BONDING TO FERROUS FITTINGS AND RESTRAINT HARDWARE.
8. CONCRETE THRUST BLOCKS SHALL BE PLACED IN SUCH A MANNER SO AS NOT TO BEAR UPON NEW AND EXISTING CONSTRUCTIONS, AND ANY AND ALL UNDERGROUND UTILITIES WHICH MAY OR MAY NOT BE IMPACTED UPON DUE TO IMPARTED WATER MAIN THRUSTS; NO THRUST BLOCK SHALL BE PLACED WHEN THERE IS NOT AT LEAST A 10 FOOT MINIMUM SEPARATION BETWEEN THE REAR OF THE THRUST BLOCK AND AN EXISTING UNDERGROUND UTILITY, UNLESS WRITTEN APPROVAL IS RECEIVED FROM BOTH THE UTILITY OWNER AND THE ENGINEER.

2 THRUST BLOCK DETAILS/NOTES

N.T.S.

NOTE:
(REFERENCE– "TEN STATE STANDARDS")
WHEN INSTALLED PARALLEL, ALL WATER AND SEWER LINES SHALL HAVE A MINIMUM SEPARATION OF 10', EDGE TO EDGE. IF MINIMUM CANNOT BE MAINTAINED, WATER MAIN SHALL BE IN SEPARATE TRENCH OR ON AN UNDISTURBED EARTH SHELF TO ONE SIDE OF SEWER, WITH BOTTOM OF WATER MAIN 18" MINIMUM ABOVE TOP OF SEWER PIPE. WHEN CROSSING, MAINS SHALL BE INSTALLED TO INSURE 18" MINIMUM VERTICAL SEPARATION BETWEEN PIPES, OUTSIDE TO OUTSIDE. WHERE WATER MAIN IS UNDERNEATH SEWER, ADEQUATE STRUCTURAL SUPPORT SHALL BE PROVIDED FOR THE SEWER TO PREVENT DAMAGE TO WATER MAIN. WHEN IT IS IMPOSSIBLE TO PROVIDE THE ABOVE MINIMUMS, THE SEWER SHALL BE DESIGNED AND CONSTRUCTED EQUAL TO WATER PIPE, AND SHALL BE PRESSURE TESTED TO ASSURE WATERTIGHTNESS PRIOR TO BACKFILLING.

3 UTILITY CROSSING DETAIL

N.T.S.

4 CONN. TO EXISTING WATER MAIN DETAIL

N.T.S.

5 NEW WATER MAIN VALVE INSTALLATION DETAIL

N.T.S.

Approval

Approved under authority of a resolution adopted ______ by the Planning Board of the City of Saratoga Springs.
______ Chairperson
Date Signed ______

the LA group
Landscape Architecture and Engineering, PC
40 Long Alley
Saratoga Springs
New York 12866
P 518/587-8100
F 518/587-0180
www.thelagroup.com

Unauthorized alteration or addition to this document is a violation of Section 7209 of the New York State Education Law

© the LA Group 2008

Design MCB
Drawn MCB
Checked CMI

PREPARED FOR:
The PIKE Company, INC.
210 Clifton Corporate Parkway
Clifton Park, NY 12065

246 WEST AVENUE
RESIDENTIAL CONDOMINIUM COMPLEX
SARATOGA SPRINGS, NY

Title
SITE DETAILS

Revisions
MYLAR CHECK SET 9/28/2012
MYLAR SET NOVEMBER 2012
May 2014

City #: 12.006.1
Project: 201178
Date: 1/25/2012

Drawing
L-9

Plotted By: MATT BROBSTON
Save Date: 11/16/2012 5:11 PM
File Name: G:\Proj-2011\201178_West_Ave_246\201178CAD\L-7_DETS.dwg

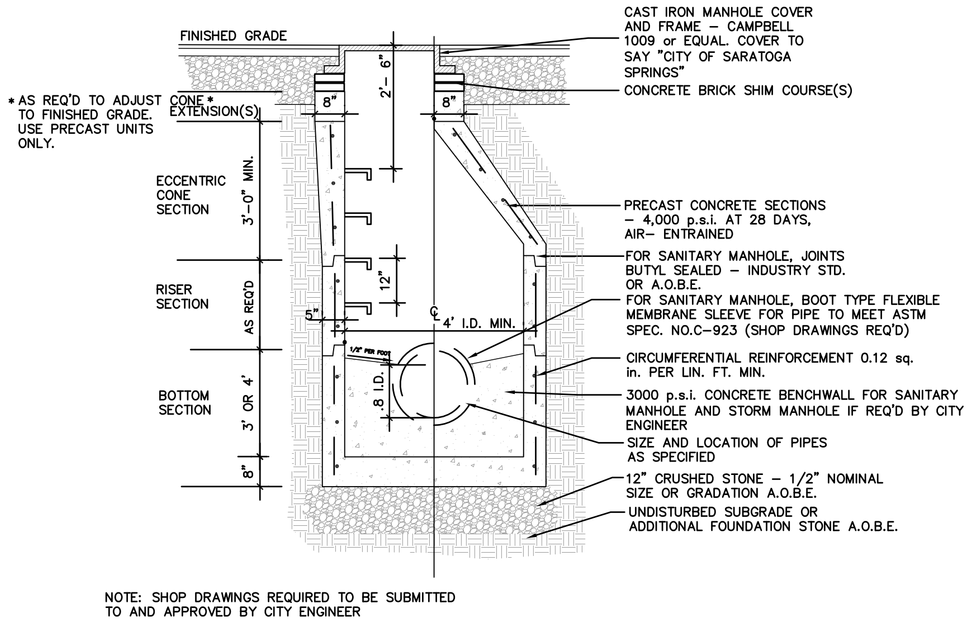

NOTE: SHOP DRAWINGS REQUIRED TO BE SUBMITTED TO AND APPROVED BY CITY ENGINEER

1 SANITARY SEWER MANHOLE DETAIL

N.T.S.

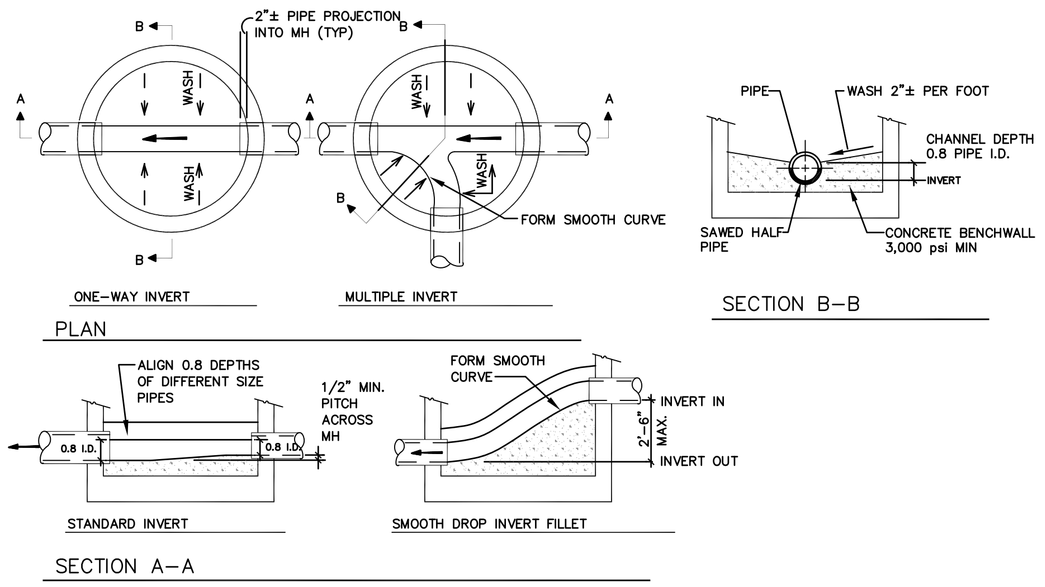

2 MANHOLE BENCH DETAIL

N.T.S.

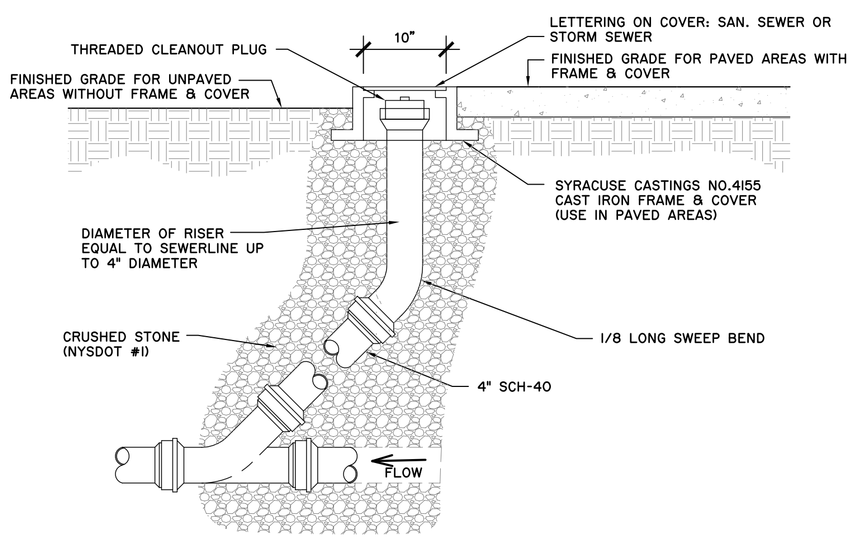

3 SANITARY SEWER CLEANOUT DETAIL

N.T.S.

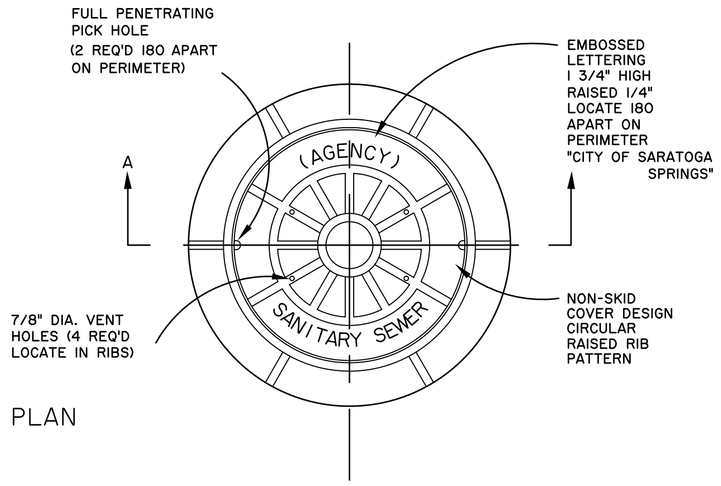

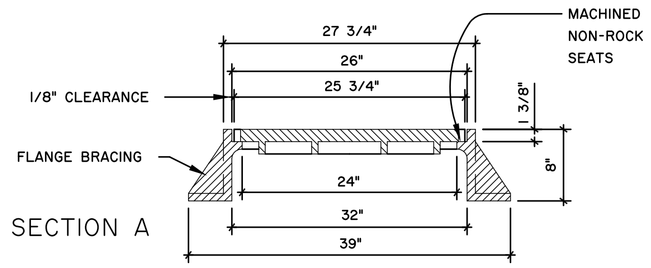

NOTE:
1) FRAME AND COVER SHALL CONFORM TO A.S.T.M. A536 (DUCTILE IRON) AND SAFELY WITHSTAND A.A.S.H.T.O. H520-44 HIGHWAY LOADING
2) FRAME AND COVER SHALL RECEIVE FACTORY APPLIED BITMASTIC COATING

4 SANITARY MANHOLE FRAME AND COVER DETAIL

N.T.S.

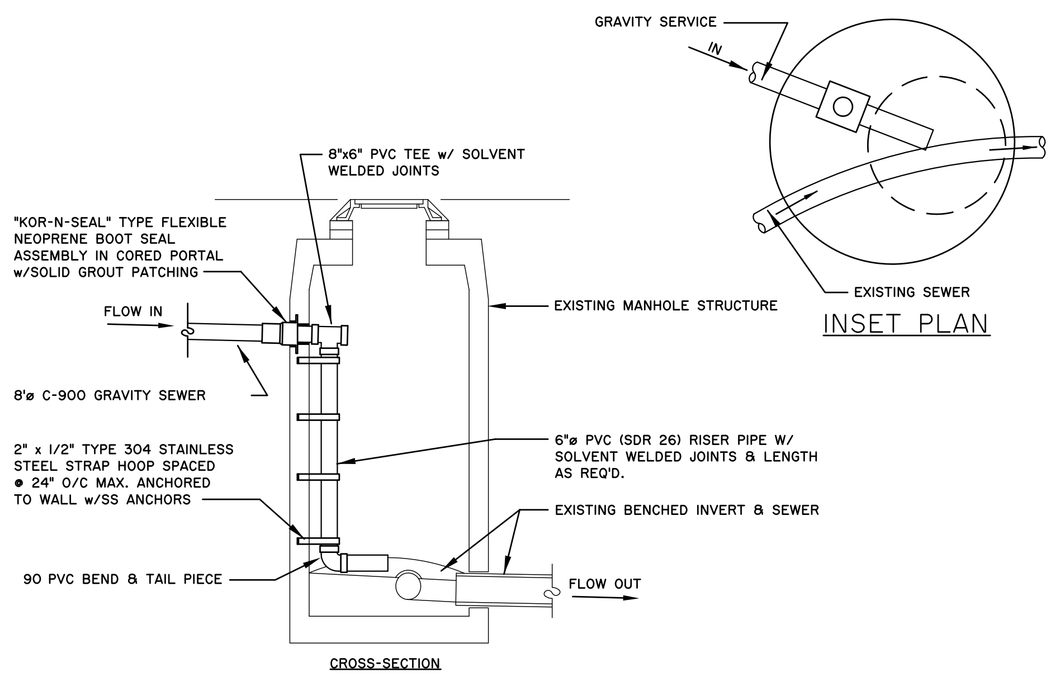

NOTES:
1) WORK EXCAVATION SHALL BE KEPT DRY AND DEWATERED AT ALL TIMES
2) EXCAVATION, BACKFILL, AND RESTORATION WITHIN HIGHWAY R.O.W. IN ACCORDANCE WITH NYSDOT SPECIFICATIONS
3) CONNECTION MATERIALS & METHODS IN ACCORDANCE WITH S.C.S.D. #1 SPECIFICATIONS.

5 SANITARY DROP @ EXISTING MANHOLE

N.T.S.

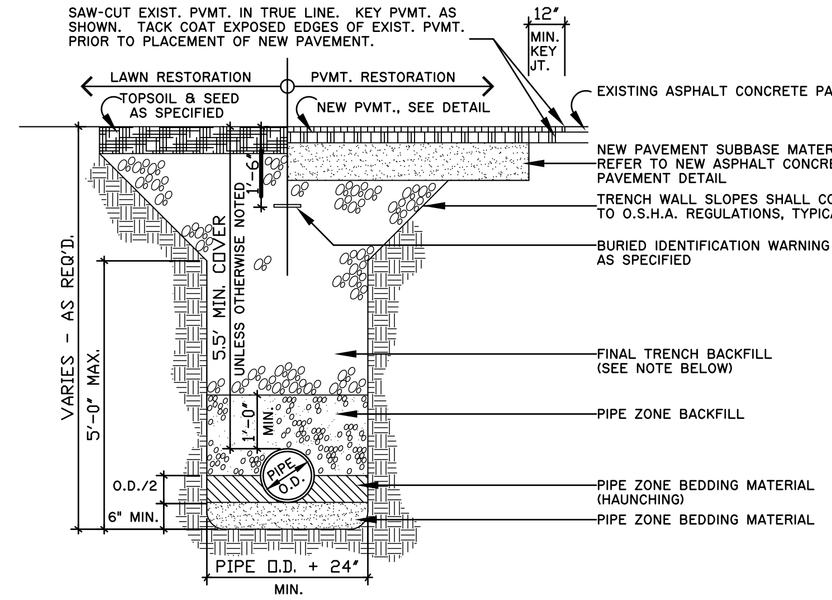

ITEM	DEPTH	MATERIAL	NYSDOT TYPE AGGREGATE	METHOD OF PLACEMENT
PIPE ZONE BEDDING (ENCOUNTERED DRY COND.)	6" MIN.	CRUSHED STONE	1	MECHANICAL COMPACTION
PIPE ZONE BEDDING (HAUNCHING/ ENCOUNTERED WET CONDITION)	6" MIN.	CRUSHED STONE	2	MECHANICAL COMPACTION
PIPE ZONE BEDDING (HAUNCHING)	PIPE O.D./2	CRUSHED STONE	1	MECHANICAL COMPACTION
PIPE ZONE BACKFILL	12" MIN. COVER	CRUSHED STONE	1	MECHANICAL COMPACTION
FINAL TRENCH BACKFILL	VARIES	SEE NOTE	SEE NOTE	MECHNANICAL COMPACTION

NOTES:
1) FINAL TRENCH BACKFILL
   a) IN NON-PAVED AREAS, FINAL TRENCH BACKFILL SHALL BE EXCAVATED MATERIAL WHEN DETERMINED SUITABLE BY THE ENGINEER OF RECORD, OTHERWISE IT SHALL BE NYSDOT TYPE 1 (ITEM NO. 304.02). MIN. MOD. PROCTOR DENSITY SHALL BE 90 PERCENT.
   b) IN PAVED AREAS, FINAL TRENCH BACKFILL SHALL BE NYSDOT TYPE 2 (ITEM NO. 304.03). MIN. MODIFIED PROCTOR DENSITY SHALL BE 95 PERCENT.
2) ALL PIPE ZONE BEDDING, PIPE ZONE BACKFILL, AND FINAL TRENCH BACKFILL SHALL BE PLACED IN 6 INCH MAXIMUM, COMPACTED LIFTS. ALL BEDDING AND BACKFILL MATERIALS SHALL BE MECHANICALLY COMPACTED TO THE SATISFACTION OF THE ENGINEER.
3) EXCAVATION SHALL BE KEPT DRY AND DEWATERED AT ALL TIMES DURING TRENCHING OPERATIONS.
4) ALL PAVEMENT SAWCUTS SHALL BE IN SOUND EXISTING PAVEMENT ACCEPTABLE TO THE ENGINEER.

6 TYPICAL WATER PIPE TRENCH DETAIL

N.T.S.

Approval

Approved under authority of a resolution adopted _____ by the Planning Board of the City of Saratoga Springs.

_____ Chairperson

Date Signed _____

the LA group
Landscape Architecture and Engineering, PC
40 Long Alley
Saratoga Springs
New York 12866
P 518/587-8100
F 518/587-0180
www.thelagroup.com

Unauthorized alteration or addition to this document is a violation of Section 7209 of the New York State Education Law

© the LA Group 2008

Design MCB
Drawn MCB
Checked CMI

PREPARED FOR:
The PIKE Company, INC.
210 Clifton Corporate Parkway
Clifton Park, NY 12065

246 WEST AVENUE
RESIDENTIAL CONDOMINIUM COMPLEX
SARATOGA SPRINGS, NY

Title
SITE DETAILS

Revisions
MYLAR CHECK SET 9/28/2012
MYLAR SET NOVEMBER 2012
May 2014

City #: 12.006.1
Project: 201178
Date: 1/25/2012

Drawing
L-10

Plotted By: MATT BRIDGETON
Save Date: 11/16/2012 5:11 PM
File Name: G:\PROJECTS\201178_West_Ave_246\2011780ADfs\7_DETS.dwg

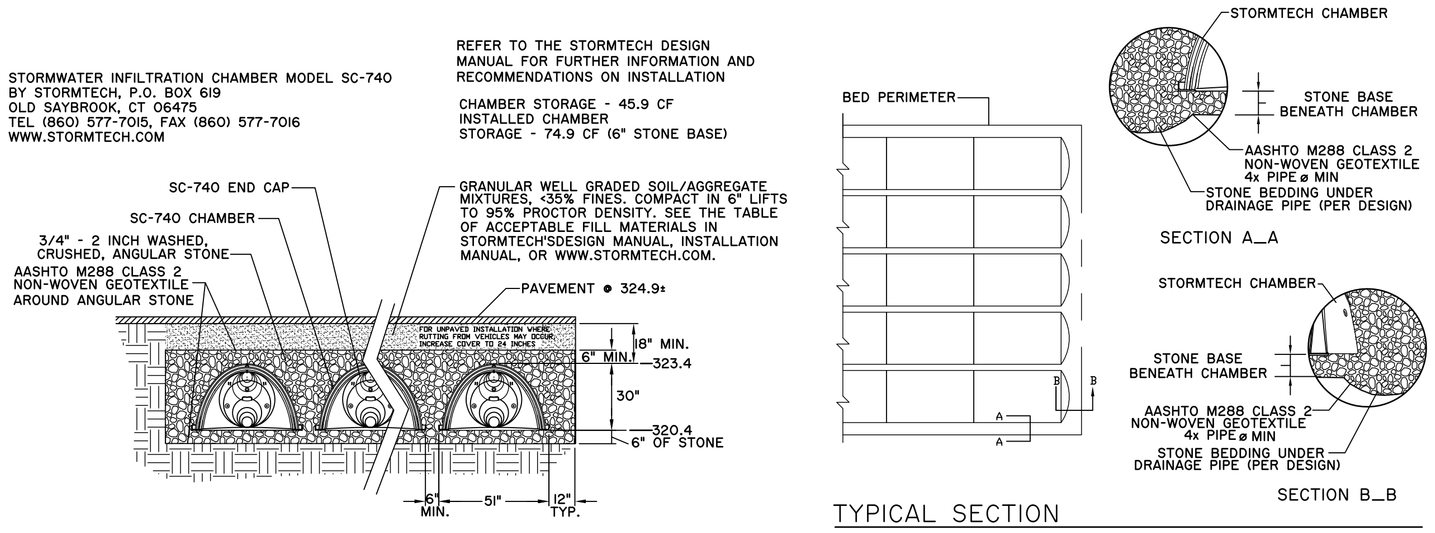

1 STORMWATER INFILTRATION CHAMBER DETAIL

N.T.S.

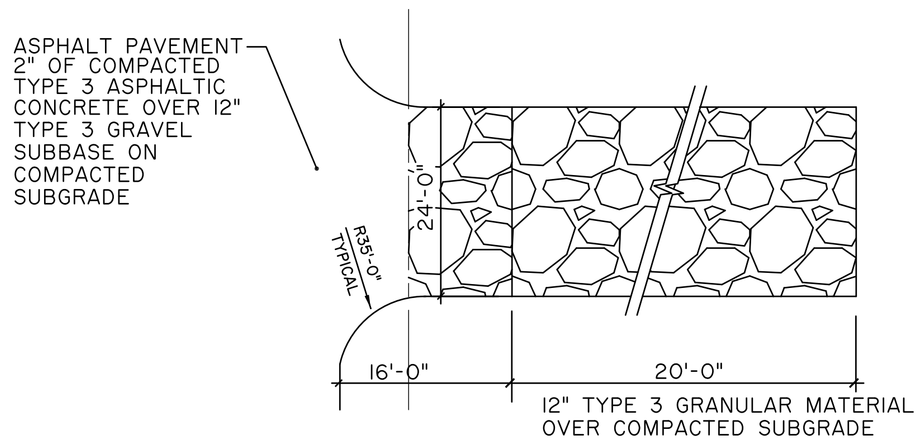

2 STABILIZED CONSTRUCTION ACCESS

N.T.S.

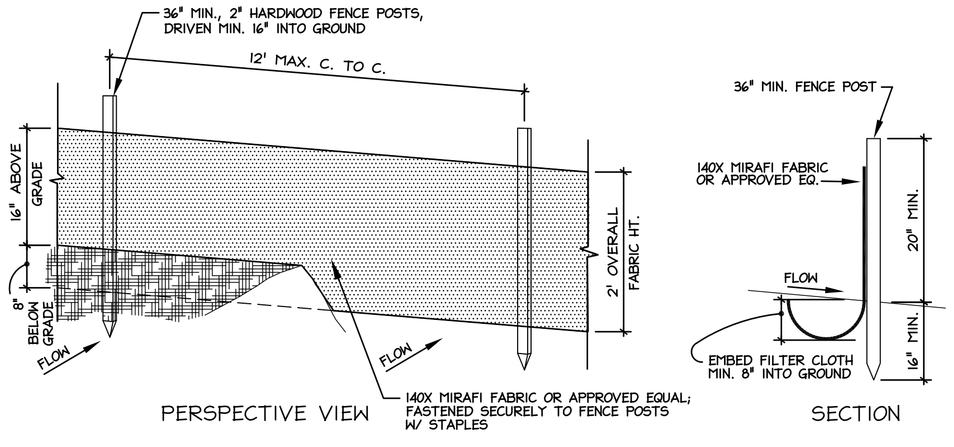

3 SILT FENCE DETAIL

N.T.S.

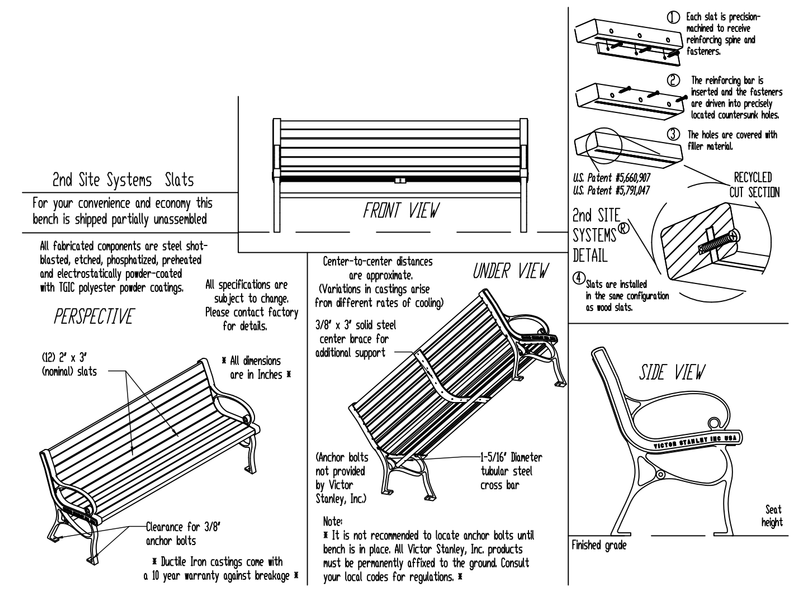

4 6' BENCH DETAIL

N.T.S.

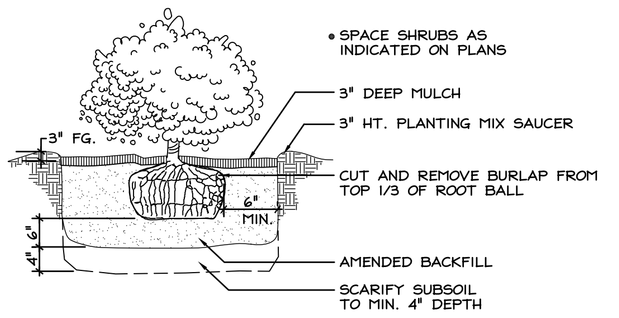

7 SHRUB PLANTING DETAIL

SCALE: NTS

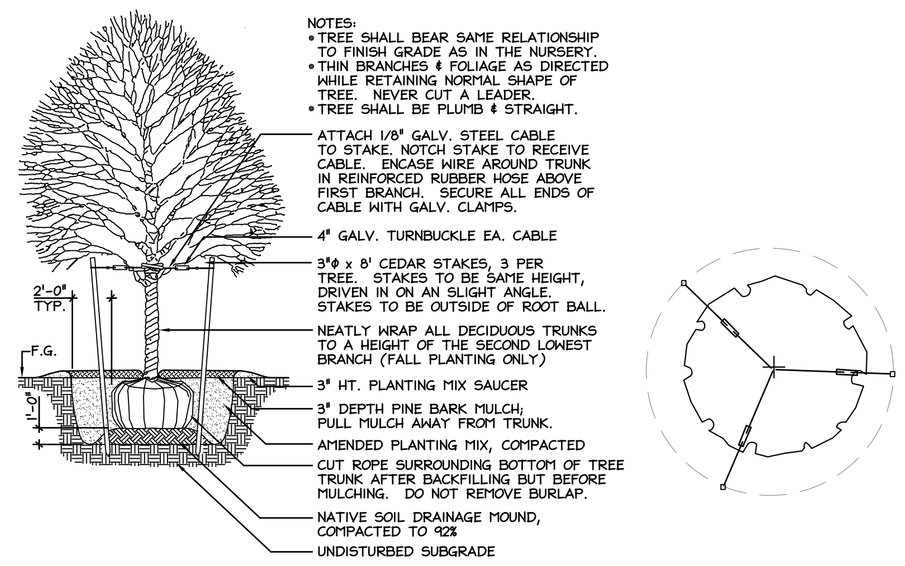

5 DECIDUOUS TREE PLANTING

SCALE: NTS

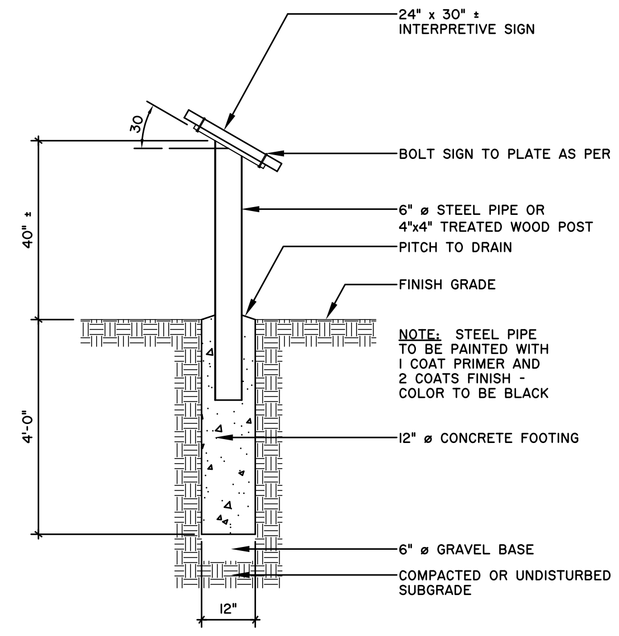

8 INTERPRETIVE SIGN DETAIL

SCALE: 1/2" = 1'-0"

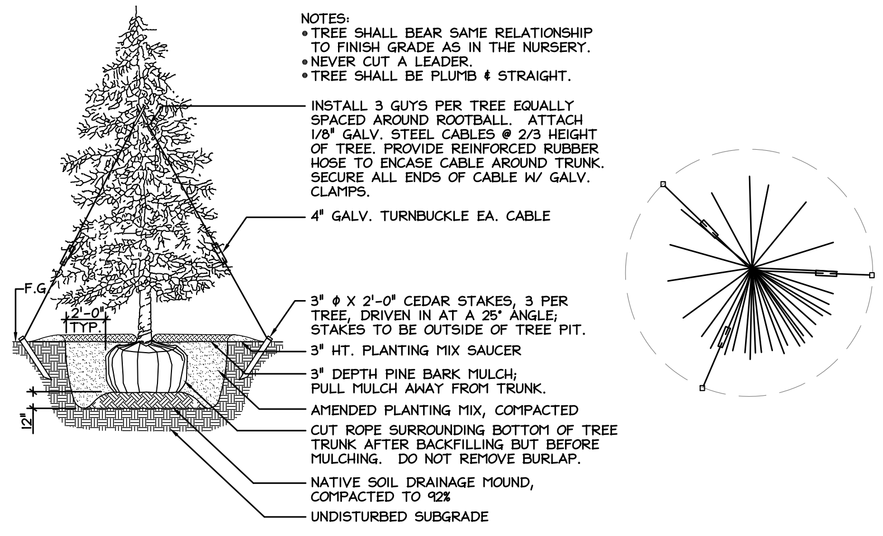

6 EVERGREEN TREE PLANTING

SCALE: NTS

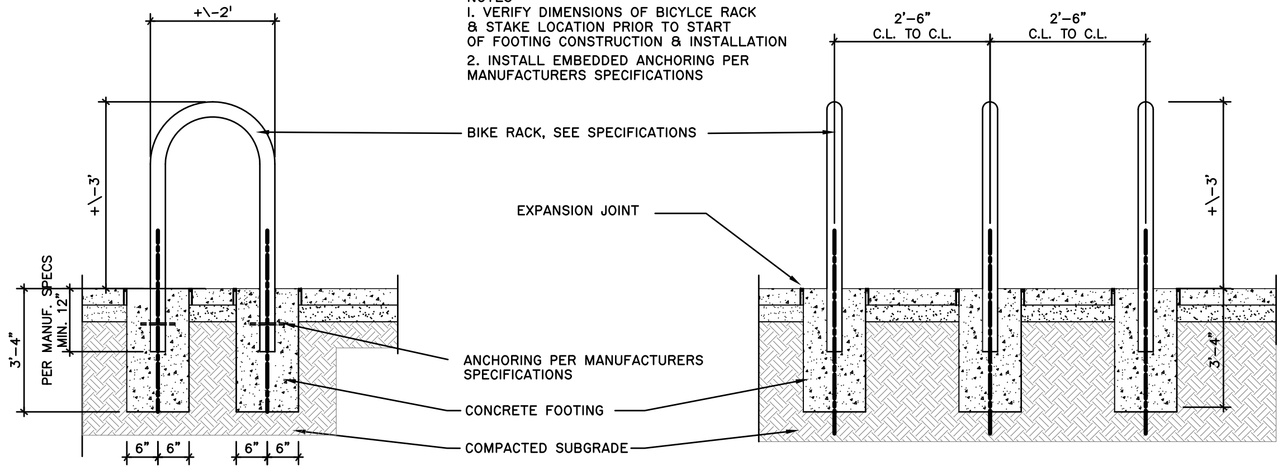

9 BICYCLE RACK

N.T.S.

Approval

Approved under authority of a resolution adopted _____ by the Planning Board of the City of Saratoga Springs.

_____ Chairperson

Date Signed _____

the LA group
Landscape Architecture and Engineering, PC
40 Long Alley
Saratoga Springs
New York 12866
P 518/587-8100
F 518/587-0180
www.thelagroup.com

Unauthorized alteration or addition to this document is a violation of Section 7209 of the New York State Education Law

© the LA Group 2008

Design MCB
Drawn MCB
Checked CMI

PREPARED FOR:
The PIKE Company, INC.
210 Clifton Corporate Parkway
Clifton Park, NY 12065

246 WEST AVENUE
RESIDENTIAL CONDOMINIUM COMPLEX
SARATOGA SPRINGS, NY

Title: SITE DETAILS

Revisions
MYLAR CHECK SET 9/28/2012
MYLAR SET NOVEMBER 2012
May 2014

City #: 12.006.1
Project: 201178
Date: 1/25/2012

Drawing
L-11

Plotted By: MATT BROBSTON
Save Date: 11/16/2012 5:11 PM
File Name: G:\Projects\12006.1\06_West_Ave_246\2011\TechDs\L-7_DETS.dwg

The LA GROUP
Landscape Architecture & Engineering P.C.
People. Purpose. Place.
40 Long Alley
Saratoga Springs
NY 12866
[redacted]
www.thelagroup.com

LETTER OF TRANSMITTAL

TO: Saratoga Springs Planning Department
City Hall
Saratoga Springs, NY 12866

DATE: 6/23/2016 JOB NO.: 201178

RE: 246 West Avenue Apartments

WE ARE SENDING YOU ☑ Attached ☐ Under separate cover via_____the following items

☐ Shop drawings ☐ Prints ☐ Plans ☐ Samples ☐ Specifications
☐ Copy of letter ☐ Change order ☐ _____

COPIES	DATE	NO.	DESCRIPTION
3			Full size Site Plan Application Plan Sets
1			Site Plan Application fee check for $2,650
3			Site plan application form
3			Site plan application check lists
3			Cost Estimate for Letter of Credit
3			Stormwater Management Report (within SWPPP)
3			Draft SWPPP
3			Engineer's Utility Report
3			11 x 17 Architectural plans (elevations and floor plans)
3			Complete Streets Checklist
3			Water Service Agreement
3			Short EAF
3			Special use permit application form
1			Special use permit fee $750
1			CD of application materials

THESE ARE TRANSMITTED as checked below:

☐ For approval ☐ Approved as submitted ☐ Resubmit_____copies for approval
☐ For your records ☐ Approved as noted ☐ Submit_____copies for distribution
☐ As requested ☐ Return for corrections ☐ Return _____corrected prints
☑ For review and comments ☐ _____
☐ FOR BIDS DUE _____20____ ☐ PRINTS RETURNED AFTER LOAN TO US

REMARKS:

cc: SIGNED:_____

If enclosures are not as noted, kindly notify us at once.

[FOR OFFICE USE]

_____
(Application #)

_____
(Date received)

CITY OF SARATOGA SPRINGS

PLANNING BOARD

City Hall - 474 Broadway
Saratoga Springs, New York 12866-2296
Tel: 518-587-3550 fax: 518-580-9480
http://www.saratoga-springs.org

APPLICATION FOR:
SITE PLAN REVIEW
(INCLUDING PUD)

(Rev: 12/2015)

*****Application Check List - All submissions must include completed application check list and all required items.**

Project Name: 246 West Ave. Apartments

Property Address/Location: 246 West Avenue

Tax Parcel #: 178.33-1-20&21 Zoning District: T-4 Urban Neighborhood

(for example: 165.52-4-37)

Proposed Use: 16 Residential units

Date special use permit granted (if any): _____ Date zoning variance granted (if any): _____

Is property located within (check all that apply)?: ☐ Historic District ☑ Architectural Review District
☐ 500' of a State Park, city boundary, or county/state highway

	APPLICANT(S)*	OWNER(S) *(If not applicant)*	ATTORNEY/AGENT
Name	John-Paul Builders, LLC	246 West Avenue, INC.	The LA group
Address	796 Burdeck Street	84 Everett Road Albany, NY 12205	40 Long Alley Saratoga Springs, NY 12866
Phon	[redacted]		[redacted]
Emai	[redacted]		

Identify primary contact person: ☐ Applicant ☐ Owner ☑ Agent

* An applicant must be the property owner, lessee, or one with an option to lease or purchase the property in question.

Application Fee: A check for the total amount below payable to: "Commissioner of Finance" MUST accompany this application.

☐	Sketch Plan -	$250	$ _____
☑	Final Site Plan Approval Residential -	$250 plus $150/unit	$ 2,650
	Non-Residential -	$500 plus $100/1,000 SQ. FT.	$ _____
☐	Modification Residential -	$250	$ _____
	Non-Residential -	$500	$ _____
			Total $ 2,650

Submission Deadline – Check City's website (www.saratoga-springs.org) for application deadlines and meeting dates.

Does any City officer, employee or family member thereof have a financial interest (as defined by General Municipal Law Section 809) in this application? YES ☐ NO ☑. If YES, a statement disclosing the name, residence, nature and extent of this interest must be filed with this application.

I, the undersigned owner, leasee or purchaser under contract for the property, hereby request Site Plan Review by the Planning Board for the identified property above. I agree to meet all requirements under Section 240-7.2 of the Zoning Ordinance of the City of Saratoga Springs.

Furthermore, I hereby authorize members of the Planning Board and designated City staff to enter the property associated with this application for purposes of conducting any necessary site inspections relating to this application.

Applicant Signature: _____ Date: _____

If applicant is not current owner, owner must also sign.

Owner Signature: _____ Date: _____

CITY OF SARATOGA SPRINGS

PLANNING BOARD

City Hall - 474 Broadway
Saratoga Springs, New York 12866-2296
Tel: 518-587-3550 fax: 518-580-9480
http://www.saratoga-springs.org

[FOR OFFICE USE]

_____
(Application #)

_____
(Date received)

Rev.12/2015

SITE PLAN REVIEW SUBMITTAL CHECKLIST

Project Name: 246 West Ave. Apartments

Listed below are the minimum submittal requirements for site plan review as set forth in The City of Saratoga Springs' Zoning Ordinance Appendix B. The Planning Board reserves the right to request additional information, as necessary, to support an application. The Board also reserves the right to reject the application if these minimum requirements are not met. Please complete the checklist below and provide with your submission.

REQUIRED ITEMS: *3 hard copies and 1 digital copy of ALL materials are required.

CHECK EACH ITEM	
☐	1. Completed Site Plan Application (3 hard copies - *1 w/original signature - and 1 digital) and Fee
☑	2. SEQR Environmental Assessment Form- short or long form as required by action.
☐	3. Set of plans including: (3) large scale plans (sheets must be 24" x 36", drawn to a scale of not more than 1"=50 feet). One digital version of all submittal items (pdf) shall be provided.
☐	4. Basic or Full Storm Water Pollution Prevention Plan as required per City Code Chapter 242.
☐	5. Copy of signed DPW water connection agreement for all projects involving new water connections to the City system
☑	6. Engineering Report for Water and Sanitary
☐	7. Complete Streets Checklist
☑	8. Project Cost Estimate-Quantities of work items and estimate of costs

REQUIRED ITEMS ON SITE PLAN, AS APPLICABLE:

☐	1. Property line survey prepared by a licensed land surveyor. Site plan must reference such survey with all corners set and marked on plan. A copy of the original property survey must also be included.
☐	2. North arrow and map scale
☑	3. Parcel tax map number
☑	4. Site location map
☑	5. Site vicinity map (all features within 300 feet of property)
☑	6. Identification of zoning district with corresponding area requirements

☑	7. Building setback lines, either listed or shown on plans.
☑	8. Title block with project name; name and address of applicant; and name and address of property owner (if different)
☑	9. Topography data tied to NGVD 1929 datum
☑	10. Name of all adjacent property owners
☑	11. Parcel street address (existing and any proposed postal addresses)
Yes No N/A ☑ ☐ ☐	12. Identification of all existing or proposed easements, covenants or legal rights-of-way on this property
☐ ☐ ☑	13. References to all prior variances or special use permits
☑ ☐ ☐	14. Existing and proposed contours and spot grades (at 2 foot intervals)
☐ ☐ ☑	15. Identification of all spoil or borrow areas
☐ ☐ ☑	16. Identification of all watercourses, designated State wetlands, buffers, Federal wetlands, floodplains, rock outcroppings, etc.
☑ ☐ ☐	17. Location of proposed storage
☑ ☐ ☐	18. Identification of all existing or proposed sidewalks or pedestrian paths (show type, size and condition of existing sidewalks)
☑ ☐ ☐	19. Location, design specifications and construction material for all proposed site improvements (drains, culverts, retaining walls, berms, fences, etc.)
☑ ☐ ☐	20. Location and distance to fire hydrant
☑ ☐ ☐	21. Location, size, and material of all existing and proposed utility services
☑ ☐ ☐	22. Parking lot layout plan and identification of all loading areas (number all spaces)
☑ ☐ ☐	23. Parking demand calculations
☑ ☐ ☐	24. Identification of parking spaces and access points for physically impaired persons
☑ ☐ ☐	25. Location and screening plan for dumpster or recycling bins
☑ ☐ ☐	26. Location, design, type of construction and materials, proposed use and exterior dimensions of all buildings (existing and proposed) on site
☐ ☐ ☑	27. Identification of storage of any potentially hazardous materials
☑ ☐ ☐	28. Planting plan identifying quantity, species and size of all proposed new plant materials. Label existing plant material to be retained or removed.
☑ ☐ ☐	29. Lighting plan showing type, location and intensity of all existing and proposed exterior lighting fixtures
☑ ☐ ☐	30. Erosion and sediment control plan – including designated concrete truck washout area

Checklist prepared by: The LA Group Date: _____

City of Saratoga Springs Complete Streets Checklist

Saratoga Springs Complete Street Policy Vision (May 2012)

The City of Saratoga Springs Complete Streets Policy will encourage the development of a complete streets network throughout the City to create a more balanced transportation system. The Policy shall be consistent with and assist in achieving the goals and recommendations set forth in the City's Comprehensive Plan and other policy documents. The Policy shall ensure new and updated public and private projects are planned, designed, maintained and operated to enable safer, comfortable and convenient travel to the greatest extent possible for users of all abilities including pedestrians, bicyclists, motorists and transit riders.

This checklist is intended to assist the City in achieving its vision for complete streets.

Project Name: 246 West Ave. Apartments **Date:** _____

Project Location / Limits: 246 West Avenue

Project Description: 16 unit apartment building

Instructions: For each box checked, please provide a brief description for how the item is addressed, not addressed, or not applicable and include supporting documentation.

Street Classification (identify street or streets within the project area)
Principal arterial ☐ Minor arterial ☐ Mixed use collector ■ Mixed use local ☐ Residential collector ☐ Residential local ☐ Special use street ☐

EXISTING CONDITIONS				
Item to Be Addressed/ Checklist Consideration	**YES**	**NO**	**N/A**	**Required Description**
Existing Bicycle & Pedestrian Operations				
Do bicycle and pedestrian accommodations exist? (see page 2 for examples)	84	Sch	☐	
Existing Transit Operations				
Do transit facilities exist within the study area, including bus and train stops/stations?	☐	☐	☐	
Is the project area on a transit route? (CDTA Service Routes)	☐	x	☐	
Are there bicycle racks, shelters, or parking for transit riders available?	☐	x	☐	
Existing Access and Mobility				
Do connective opportunities exist with schools, hospitals, senior care or community centers or persons with disabilities within project area?	x	☐	☐	Project Area adjacent to the YMCA
Are there gaps inhibiting continuous access between schools, hospitals, senior care, or community centers or persons with disabilities within project area?"	☐	x	☐	
Project Area Context				
Are there prominent landmarks, recreation, shopping, employment center, cultural centers or other key destinations that offer opportunities to connect this site?	x	☐	☐	Project Area adjacent to the YMCA
Please list and/or describe planning or policy documents addressing bicyclist, pedestrian, transit, or truck/ freight use for the project area. Examples can include: City of Saratoga Springs Comprehensive Plan, City of Saratoga Springs Open Space Plan, Capital District Transportation Committee Bicycle/ Pedestrian Priority Network, City Standard Details, etc.				

PROPOSED DESIGN				
Item to Be Addressed/ Checklist Consideration	**YES**	**NO**	**N/A**	**Required Description**
Complete Streets Design				
Bicyclist accommodations?	x			Bike Rack and bicycle friendly grates
Pedestrian accommodations?	x			Sidewalks proposed
Access and Mobility accommodations?	x			Adequate sidewalks
Transit accommodations?		x		
Truck/ freight accommodations?			x	
Streetscape elements?	x			sidewalks, landscaping and lighting

Bike Facilities:	
Off-roadway bike accommodations	■ Yes ☐ No ☐ NA
Dedicated bike lane	☐ Yes ■ No ☐ NA
Shared-use lane	☐ Yes ■ No ☐ NA
Shoulder	■ Yes ☐ No ☐ NA
Acceptable actuated traffic signal bike detection, including turn lanes	☐ Yes ■ No ☐ NA
Do signals allow adequate minimum green time for bicyclist to safely cross intersection?	☐ Yes ☐ No ■ NA
Signage and pavement markings specific to proposed bike facilities	☐ Yes ■ No ☐ NA
Bicycle safe inlet grates	■ Yes ☐ No ☐ NA
Bicycle parking, eg. bike racks, bike lockers	■ Yes ☐ No ☐ NA
Transit Facilities:	
Transit shelters	☐ Yes ■ No ☐ NA
Bus turnouts	☐ Yes ■ No ☐ NA
Standing pads	☐ Yes ■ No ☐ NA
Has CDTA been contacted?	☐ Yes ■ No ☐ NA
Access and Mobility Facilities:	
Adequate sidewalk or paved path	■ Yes ☐ No ☐ NA
Acceptable consideration/provision for accessible pedestrian traffic signal features	☐ Yes ☐ No ■ NA
Curb ramps, including detectable warning surface	■ Yes ☐ No ☐ NA
Acceptable slope and cross-slope for driveway ramps, sidewalks, crossings)	■ Yes ☐ No ☐ NA
Have conflicts been reduced among pedestrian, bicyclists, and motor vehicles (access management)?	■ Yes ☐ No ☐ NA

Pedestrian Facilities:	
Sidewalks on both sides of the street	☐ Yes ■ No ☐ NA
Striped crosswalks	☐ Yes ■ No ☐ NA
Geometric modifications to reduce crossing distances such as curb extensions (e.g. bulb-outs)	☐ Yes ■ No ☐ NA
Acceptable provision for pedestrian traffic signal features (e.g. ped. buttons)	☐ Yes ☐ No ■ NA
Pedestrian signage for crossing & wayfinding	☐ Yes ☐ No ■ NA
Safety islands/medians on roadways with two or more traffic lanes in each direction	☐ Yes ☐ No ■ NA
Enhanced supplemental pedestrian treatments at uncontrolled marked crossings	☐ Yes ☐ No ■ NA
Connectivity:	
Are there proposed connections to other bike paths, pedestrian facilities, or transit facilities?	■ Yes ☐ No ☐ NA
Are there proposed connections to any key destinations listed on page 1?	■ Yes ☐ No ☐ NA
Are there proposed connections to neighborhoods?	■ Yes ☐ No ☐ NA
Streetscape Elements:	
Are streetscape elements proposed such as landscaping, street trees, planters, buffer strips, etc?	■ Yes ☐ No ☐ NA
Pedestrian-level lighting	■ Yes ☐ No ☐ NA
Public seating or benches	■ Yes ☐ No ☐ NA

Design Standards and Guidelines				
Design meets guidelines such as described below for bicycle/pedestrian/bus/transit facilities?	■ Yes	☐ No	☐ NA	Describe

***American Association of State Highway and Transportation Officials (AASHTO**) - *A Policy on Geometric Design of Highway and Streets, Guide for the Development of Bicycle Facilities and AASHTO Guide for the Planning, Design, and Operation of Pedestrian Facilities; Public Right-of-Way Accessibility Guide*(PROWAG); *Manual on Uniform Traffic Control Devices* (MUTCD); *Americans with Disabilities Act Accessibility Guidelines* (ADAAG); **National Association of City Transportation Officials (NACTO)** - *Urban Bikeway Design Guide*. **New York State Department of Transportation** – *Highway Design Manual*

617.20
Appendix B
Short Environmental Assessment Form

Instructions for Completing

Part 1 - Project Information. The applicant or project sponsor is responsible for the completion of Part 1. Responses become part of the application for approval or funding, are subject to public review, and may be subject to further verification. Complete Part 1 based on information currently available. If additional research or investigation would be needed to fully respond to any item, please answer as thoroughly as possible based on current information.

Complete all items in Part 1. You may also provide any additional information which you believe will be needed by or useful to the lead agency; attach additional pages as necessary to supplement any item.

Part 1 - Project and Sponsor Information

Name of Action or Project:
246 West Avenue Apartments

Project Location (describe, and attach a location map):
246 West Avenue

Brief Description of Proposed Action:
16 residential units with associated parking. Watermain extension along West Ave.

Name of Applicant or Sponsor:	Telephone:
	E-Mail:

Address:

City/PO:	State:	Zip Code:

	NO	YES
1. Does the proposed action only involve the legislative adoption of a plan, local law, ordinance, administrative rule, or regulation? If Yes, attach a narrative description of the intent of the proposed action and the environmental resources that may be affected in the municipality and proceed to Part 2. If no, continue to question 2.	X	
2. Does the proposed action require a permit, approval or funding from any other governmental Agency? If Yes, list agency(s) name and permit or approval: Site plan and Special use permit(Saratoga Springs Planning Board) Saratoga Springs Design review commission approval		X

3.a. Total acreage of the site of the proposed action? .51 acres
b. Total acreage to be physically disturbed? .51 acres
c. Total acreage (project site and any contiguous properties) owned or controlled by the applicant or project sponsor? .51 acres

4. Check all land uses that occur on, adjoining and near the proposed action.
☐ Urban ☐ Rural (non-agriculture) ☐ Industrial ☒ Commercial ☐ Residential (suburban)
☐ Forest ☒ Agriculture ☐ Aquatic ☒ Other (specify): YMCA
☐ Parkland

	NO	YES	N/A
5. Is the proposed action,			
a. A permitted use under the zoning regulations?		X	
b. Consistent with the adopted comprehensive plan?		X	

	NO	YES
6. Is the proposed action consistent with the predominant character of the existing built or natural landscape?		X
7. Is the site of the proposed action located in, or does it adjoin, a state listed Critical Environmental Area? If Yes, identify: _____		X
8. a. Will the proposed action result in a substantial increase in traffic above present levels?		X
b. Are public transportation service(s) available at or near the site of the proposed action?		X
c. Are any pedestrian accommodations or bicycle routes available on or near site of the proposed action?		X
9. Does the proposed action meet or exceed the state energy code requirements? If the proposed action will exceed requirements, describe design features and technologies: _____		X
10. Will the proposed action connect to an existing public/private water supply? If No, describe method for providing potable water: _____		X
11. Will the proposed action connect to existing wastewater utilities? If No, describe method for providing wastewater treatment: _____		X
12. a. Does the site contain a structure that is listed on either the State or National Register of Historic Places?		X
b. Is the proposed action located in an archeological sensitive area?		X
13. a. Does any portion of the site of the proposed action, or lands adjoining the proposed action, contain wetlands or other waterbodies regulated by a federal, state or local agency?		X
b. Would the proposed action physically alter, or encroach into, any existing wetland or waterbody? If Yes, identify the wetland or waterbody and extent of alterations in square feet or acres: _____		X

14. Identify the typical habitat types that occur on, or are likely to be found on the project site. Check all that apply:

☐ Shoreline ☐ Forest ☐ Agricultural/grasslands ☒ Early mid-successional

☐ Wetland ☐ Urban ☐ Suburban

	NO	YES
15. Does the site of the proposed action contain any species of animal, or associated habitats, listed by the State or Federal government as threatened or endangered?		X
16. Is the project site located in the 100 year flood plain?		X
17. Will the proposed action create storm water discharge, either from point or non-point sources? If Yes,		
a. Will storm water discharges flow to adjacent properties? ☐ NO ☒ YES		X
b. Will storm water discharges be directed to established conveyance systems (runoff and storm drains)? If Yes, briefly describe: ☐ NO ☒ YES The stormwater design will connect the overflow from the system to an existing city storm main within West Ave.		

	NO	YES
18. Does the proposed action include construction or other activities that result in the impoundment of water or other liquids (e.g. retention pond, waste lagoon, dam)? If Yes, explain purpose and size: _____ _____ _____	X	
19. Has the site of the proposed action or an adjoining property been the location of an active or closed solid waste management facility? If Yes, describe: _____ _____ _____	X	
20. Has the site of the proposed action or an adjoining property been the subject of remediation (ongoing or completed) for hazardous waste? If Yes, describe: _____ _____ _____	X	

I AFFIRM THAT THE INFORMATION PROVIDED ABOVE IS TRUE AND ACCURATE TO THE BEST OF MY KNOWLEDGE

Applicant/sponsor name: _____ Date: _____

Signature: _____

Part 2 - Impact Assessment. The Lead Agency is responsible for the completion of Part 2. Answer all of the following questions in Part 2 using the information contained in Part 1 and other materials submitted by the project sponsor or otherwise available to the reviewer. When answering the questions the reviewer should be guided by the concept "Have my responses been reasonable considering the scale and context of the proposed action?"

	No, or small impact may occur	Moderate to large impact may occur
1. Will the proposed action create a material conflict with an adopted land use plan or zoning regulations?		
2. Will the proposed action result in a change in the use or intensity of use of land?		
3. Will the proposed action impair the character or quality of the existing community?		
4. Will the proposed action have an impact on the environmental characteristics that caused the establishment of a Critical Environmental Area (CEA)?		
5. Will the proposed action result in an adverse change in the existing level of traffic or affect existing infrastructure for mass transit, biking or walkway?		
6. Will the proposed action cause an increase in the use of energy and it fails to incorporate reasonably available energy conservation or renewable energy opportunities?		
7. Will the proposed action impact existing: a. public / private water supplies?		
b. public / private wastewater treatment utilities?		
8. Will the proposed action impair the character or quality of important historic, archaeological, architectural or aesthetic resources?		
9. Will the proposed action result in an adverse change to natural resources (e.g., wetlands, waterbodies, groundwater, air quality, flora and fauna)?		

	No, or small impact may occur	Moderate to large impact may occur
10. Will the proposed action result in an increase in the potential for erosion, flooding or drainage problems?		
11. Will the proposed action create a hazard to environmental resources or human health?		

Part 3 - Determination of significance. The Lead Agency is responsible for the completion of Part 3. For every question in Part 2 that was answered "moderate to large impact may occur", or if there is a need to explain why a particular element of the proposed action may or will not result in a significant adverse environmental impact, please complete Part 3. Part 3 should, in sufficient detail, identify the impact, including any measures or design elements that have been included by the project sponsor to avoid or reduce impacts. Part 3 should also explain how the lead agency determined that the impact may or will not be significant. Each potential impact should be assessed considering its setting, probability of occurring, duration, irreversibility, geographic scope and magnitude. Also consider the potential for short-term, long-term and cumulative impacts.

□ Check this box if you have determined, based on the information and analysis above, and any supporting documentation, that the proposed action may result in one or more potentially large or significant adverse impacts and an environmental impact statement is required.

□ Check this box if you have determined, based on the information and analysis above, and any supporting documentation, that the proposed action will not result in any significant adverse environmental impacts.

Name of Lead Agency	Date
Print or Type Name of Responsible Officer in Lead Agency	Title of Responsible Officer
Signature of Responsible Officer in Lead Agency	Signature of Preparer (if different from Responsible Officer)

The LA GROUP
Landscape Architecture & Engineering P.C.
People. Purpose. Place.
40 Long Alley
Saratoga Springs
NY 12866
[redacted]
www.thelagroup.com

Engineering Report
Water and Sanitary Sewer

For

246 West Avenue
Residential Apartment Building

SARATOGA SPRINGS, NEW YORK

Planning Board #16.XXX

Prepared For

John-Paul Builders, LLC
796 Burdeck Street
Schenectady, NY 12306
Contact: John Luke Hodorowski

Prepared By

The LA Group, P.C.
40 Long Alley
Saratoga Springs, New York 12866

June 23, 2016

I. Introduction

John-Paul Builders, LLC is proposing to construct a sixteen-unit apartment building at 246 West Avenue (Tax Map Parcels 178.33-1-20 & 21) in the city of Saratoga Springs, NY. Currently, the site is developed as residence with a single home onsite. There are grassed and forested cover types on the property. The site is generally flat. The surrounding area is developed with a small hotel to the north, the Saratoga Springs YMCA to the south and residential housing to the east. This project is for the construction of a new apartment building.

II. Project Description

The proposed sixteen-unit apartment project will consist of one building. The project is proposing a total of 16 residential units, totaling 18 bedrooms. The units will have internal fire sprinklers, and fire hydrants will be located on West Avenue.

III. Existing Water and Sanitary Sewer Utilities

Water Distribution – A 6-inch cast-iron water line is present on West Avenue, immediately adjacent to the parcel. According to the City of Saratoga Springs DPW, this line is very old and fragile and will not likely support the design flows and pressures required by this project.

Several years ago, the YMCA agreed to and installed a new 12-inch ductile iron water line from the Ballston Avenue intersection up to their new facility. This 12-inch water main is located on the west side of West Avenue and ends approximately 800 feet south of the project.

There is a 12-inch ductile iron water main located on the west side of West Avenue terminating approximately 500 feet north of the project.

Sanitary Sewer – An existing 16-inch sanitary sewer main owned and maintained by the Saratoga County Sewer District No. 1 (SCSD #1) runs in a southeasterly direction past the property in an easement from the YMCA of Saratoga Springs. The nearest access manhole is located on the west side of West Avenue approximately 50 feet south of the southwest property corner.

IV. Projected Water and Wastewater Flows

The table below provides information on the anticipated wastewater flow rates for the project:

Description	Use Rate	Total Use
(18) bedrooms	110 gpd/bedroom[1]	1,980 gpd

Average daily flow for wastewater is estimated to be 1.4 gallons per minute (gpm) based on a 24 hour day. Estimated peak hourly flow is 5.9 gpm (4.2 x average).[2]

Average daily demand for water is estimated to be approximately equal to the wastewater flow or 1.4 gpm. Instantaneous peak demand is estimated to be 80 gpm.[3]

For the purposes of input into the City of Saratoga Springs water model, we offer the following estimated water demands for the project:

- Average Day Demand is 1.4 gallons per minute (GPM) over the 24 hour period.
- Max Day Demand is 2.8 gallons per minute (GPM) based on twice the average.
- Peak Hourly Flow is 5.9 gallons per minute (GPM) based on 4.2 times the average.
- Fire Flow Demand is 1,000 gallons per minute (GPM) per ISO guidelines.

V. Proposed Water and Wastewater Utilities

Proposed Water Utilities

To service the project, it was initially proposed to tap the existing 6-inch water main on West Avenue. Following discussions with the City, it was agreed to extend the existing 12-inch water main from the north up to the southerly property line. The line will be extended in a southerly direction, approximately 500 feet terminating with a new hydrant, valve and end cap for future connection. New fire hydrants will be installed to maintain a spacing of 400 feet. This arrangement will benefit the municipality in providing another link in the ultimate connection to the existing 12-inch water main brought up from Ballston Avenue by the YMCA.

The units will receive water service via a six-inch ductile iron water line. Once inside the main

building, the water service will be divided to individual meters to serve the units.

Needed Fire Flow (NFF) for residential occupancies such as apartment buildings protected by an automatic sprinkler system installed in accordance with NFPA 13R is the demand at the base of the automatic sprinkler riser. The minimum NFF is 1,000 gpm at 20 psi for a duration of 2 hours.[4]

Connections and appurtenances, including mechanical joints, tees, isolation valves, thrust blocks, trenching, bedding, service connections, as well as testing and disinfection will all be specified in accordance with City of Saratoga Springs standards.

Proposed Wastewater Utilities

From the main building, sanitary wastewater will be piped in a six-inch PVC lateral installed at a slope of approximately 1.0% across West Avenue to a new sanitary sewer manhole. From this manhole the sewerline will be run adjacent to the westerly line of West Avenue to an existing SCSD #1 manhole.

All sanitary sewer lines and manhole connections will be furnished and installed according to Saratoga County Sewer District No. 1 standards.

Notes

1. *From Table 1, Appendix 75-A Wastewater Treatment Standards - Residential Onsite Systems (110 gallons per day per bedroom)*
2. *From Figure 1, GLUMRB Recommended Standards for Wastewater Facilities*
   Q = (18 + P ½) ÷ (4 + P ½) where P = population in thousands
3. *From Table XIV Community Water Systems Source Book, Ameen (5.0 gpm/residence)*
4. *Insurance Services Office, Inc. "Guide for Determination of Needed Fire Flow" (Chapter 1, Note 2)*

The LA GROUP
Landscape Architecture & Engineering P.C.

40 Long Alley
Saratoga Springs
NY 12866

p: 518-587-8100
f: 518-587-0180
www.thelagroup.com

Stormwater Pollution Prevention Plan

for:

246 West Avenue Apartments

Owner/Operator(s):

John-Paul Builders, LLC
796 Burdeck Street
Schenectady, NY 12306
Contact: John Luke Hodorowski
518-356-1435

SWPPP Contact(s):

The LA Group, PC
40 Long Alley
Saratoga Springs, NY 12866
1-518-587-8100
1-518-587-0180

SWPPP Preparation Date:

June 23, 2016

Table of Contents

1.0 PERMIT OVERVIEW AND REQUIREMENTS 1

1.1 PERMIT OVERVIEW 1

2.0 SWPPP REVIEW, UPDATE 1

2.1 SWPPP REVIEW 1
2.2 SWPPP UPDATE 1

3.0 SITE ASSESSMENT, EVALUATION AND PLANNING 2

3.1 PROJECT LOCATION 2
3.2 PRE-DEVELOPMENT CONDITIONS 2
3.3 PROJECT SCOPE 2
3.4 RECEIVING WATERS 2
3.5 HISTORIC PRESERVATION DETERMINATION/ENDANGERED SPECIES 2
3.6 SOILS 2

4.0 EROSION AND SEDIMENT CONTROL 3

4.1 EROSION AND SEDIMENT CONTROL PRACTICES 3
4.2 EROSION AND SEDIMENT CONTROL DRAWINGS 3
4.3 CONSTRUCTION SEQUENCE OF OPERATIONS 3
4.4 EROSION AND SEDIMENT CONTROL PRACTICE MAINTENANCE 4
4.5 EROSION AND SEDIMENT CONTROL INSPECTION 5
4.6 CONTRACTOR SEQUENCE FORM 5

5.0 POST CONSTRUCTION STORMWATER MANAGEMENT PRACTICES 6

5.1 STORMWATER MANAGEMENT CONTROLS 6
5.2 POST CONSTRUCTION STORMWATER MANAGEMENT DRAWINGS 6
5.3 HYDRAULIC AND HYDROLOGIC ANALYSIS 6
5.4 COMPARISON OF PRE AND POST CONSTRUCTION STORMWATER RUNOFF 6
5.5 WATER QUALITY VOLUME 7
5.6 RUNOFF REDUCTION VOLUME 8
5.7 CHANNEL PROTECTION VOLUME (CPV) 8

6.0 POST CONSTRUCTION STORMWATER MAINTENANCE 8

6.1 MECHANISM OF OPERATION AND MAINTENANCE 8
6.2 MAINTENANCE TO BE PERFORMED 8

7.0 CONSTRUCTION WASTE 9

8.0 TEMPORARY STABILIZATION FOR FROZEN CONDITIONS 10

9.0 SPILL PREVENTION PRACTICES 11

10.0 CERTIFICATIONS 15

11.0 DEFINITIONS 20

Appendices

A **HydroCAD Calculations and Storm Data**

B **Soil Survey and Map Set** – Location Map, Site Preparation and Demolition, Grading and Utility Plan

C **SWPPP Inspection Forms** –SWPPP Inspection Report

D **Other SWPPP Forms** – Construction Sequence, SWPPP Plan Changes, Spill Response Form, Stormwater Management Practice Maintenance Log

1.0 PERMIT OVERVIEW AND REQUIREMENTS

1.1 Permit Overview

This Stormwater Pollution Prevention Plan (SWPPP) is prepared to inform the landowner and construction personnel of the measures to be implemented for controlling runoff and pollutants from the site during and after construction activities.

The operator is responsible to maintain onsite in a secure location that is accessible during normal working hours to an individual performing a compliance inspection, the following information:

- ✓ the SWPPP,
- ✓ All inspection reports.

Technical standards are detailed in the "New York State Standards and Specifications for Sediment and Erosion and Sediment Control (August 2010)", as well as illustrated on the Grading and Utility Plan included in **Appendix B**.

2.0 SWPPP REVIEW, UPDATE

2.1 SWPPP Review

City of Saratoga Springs requires preparation of a SWPPP for non-residential activities disturbing 0.1 acres or more. The project is proposed to disturb 0.51 acres. Project review will be conducted by the City of Saratoga Springs.

2.2 SWPPP Update

The permittee identified in this SWPPP shall amend the SWPPP under the following conditions:

- ✓ Whenever the current provisions prove to be ineffective in minimizing pollutants in stormwater discharge from the site
- ✓ Whenever there is a change in design, construction or operation that could have an effect on the discharge of pollutants
- ✓ To address issues or deficiencies identified during an inspection by the qualified inspector, the Department or other regulatory authority
- ✓ To identify a new subcontractor or owner that will implement any part of the SWPPP.

If modifications are required to the post-stormwater management practices the City of Saratoga Springs must be notified in writing of any planned amendments or modifications to the post-construction stormwater management practice component of the SWPPP.

3.0 SITE ASSESSMENT, EVALUATION AND PLANNING

3.1 Project Location

The project is located at 246 West Avenue in the City of Saratoga Springs, Saratoga County, NY 12866.

See **Appendix B** for a general site location map.

3.2 Pre-Development Conditions

Currently, the site is developed as residential with a single home onsite. There are grassed and forested cover types on the property. The site is generally flat. The surrounding area is developed with a small hotel to the north, the Saratoga Springs YMCA to the south and residential housing to the east.

3.3 Project Scope

Specifically, this project is for the construction of a three-story apartment building with a total of 16 units. The total building footprint will be 9,800 square feet. There will be 24 parking spaces provided for the occupants of the apartments, 17 of which will be at the ground level of the three-story building. The Project will disturb approximately +/-0.51 acres.

3.4 Receiving Waters

The closest NYSDEC mapped stream located in the project vicinity that the site drains to is an unnamed tributary to Geyser Creek (NYSDEC # 841-137.) This stream is located approximately 2,000 feet to the west of the site, in an agricultural field. This stream is classified as a C stream by NYSDEC.

3.5 Historic Preservation Determination/Endangered Species

The project received SEQRA and planning board approval on December 9, 2011 at which time it was determined that there were no archeological or endangered species concerns within the project area.

3.6 Soils

The USDA/NRCS soil survey map for this site shows Deerfield loamy fine sand and Windsor loamy sand series mapped in the project vicinity. These soils are classified in the hydrologic soil group ‘A’. Soil borings were completed by Dente Engineering in April of 2005 that found the project area to have deep sands. Falling head permeability tests are to be completed to confirm infiltration rates. Soil survey and boring results can be found in **Appendix B**.

4.0 EROSION AND SEDIMENT CONTROL

4.1 Erosion and Sediment Control Practices

Temporary Structural Practices

- ✓ Silt Fence
- ✓ Dust Control
- ✓ Construction Entrance

Permanent Structural Controls

- ✓ Asphalt pavement/concrete walks

Temporary Stabilization Practices (including vegetative practices)

- ✓ Seed and mulch bare soil areas within 14 days of disturbance unless construction will resume in that area within 21 days.

Permanent Stabilization Practices (including vegetative practices)

- ✓ Seed and mulch all disturbed areas. Slopes that are 3:1 or steeper should receive a Rolled Erosion Control Product (RECP), sodding, and or hydro-seeding a homogenous mixture of wood fiber mulch with tackifying agent.

Refer to Construction Drawings attached in **Appendix B** for detailed information on each practice.

4.2 Erosion and Sediment Control Drawings

Erosion and Sediment Control practices are shown on the Construction Drawings included in **Appendix B.**

4.3 Construction Sequence of Operations

- ✓ Temporary structural erosion controls will be installed prior to earthwork as per the attached plans.
- ✓ Areas to be undisturbed for more than 14 days will be temporarily stabilized by seeding.
- ✓ Disturbed areas will be reseeded and mulched immediately after final contours are re-established and no more than 14 days after the completion of construction at that site.
- ✓ Temporary erosion control devices will not be removed until the area served is stabilized by the growth of vegetation and the area is certified as being stabilized by the Erosion Control Inspector.

Construction Activities	Start → Stop
Sequence must include major items such as, but not limited to, clearing and grubbing, excavation and grading, utility and infrastructure installation and any other activity resulting in soil disturbance. Include installation of erosion and sediment control practices and timing of installation.	
Install silt fence and construction fence prior to any site disturbance. Maintain erosion control measures for duration of site disturbances.	Week 1
Excavate and install underground utilities.	Weeks 1-3
Parking Lot Construction	Weeks 3-6
Building construction	Week 3-completion
Fine grade and landscape	After completion of building
Remove erosion and sediment control measures upon stabilization of contributing areas.	At completion 80% Germination

4.4 Erosion and Sediment Control Practice Maintenance

Temporary erosion and sediment control practices will need to be maintained frequently during construction. It is the responsibility of the operator to inspect, and maintain the temporary controls so that they are working efficiently. The operator needs to pay close attention to SWPPP Inspection Reports that will advise of needed maintenance. Captured sediment will have to be removed periodically from each practice in order for the control to function properly. Temporary erosion and sediment control practice maintenance needs are listed below:

- ✓ Silt fence – maintenance shall be performed as needed and material removed when “bulges” develop in the silt fence.
- ✓ Stabilized construction entrance – entrance shall be maintained in a condition which shall prevent tracking. This may require periodic top dressing with additional aggregate. All sediment tracked onto or spilled on public rights of way shall be removed immediately. When necessary, wheels must be cleaned to remove sediment prior to entrance on public rights of way. When washing is required, it shall be done in an area stabilized with aggregate.

4.5 Erosion and Sediment Control Inspection

- A qualified inspector shall conduct an assessment of the site prior to the commencement of construction and certify in an inspection report that the appropriate erosion and sediment controls described in the SWPPP have been adequately installed to ensure overall preparedness of the site for commencement of construction.
- This qualified inspector must be a Licensed Professional Engineer, Certified Professional in Erosion and Sediment Control (CPESC), Registered Landscape Architect, or someone working under the direct supervision of, and at the same company as, the licensed Professional Engineer or Registered Landscape Architect, provided they have received 4 hours of Department endorsed training in proper erosion and sediment control principles from a Soil and Water Conservation District, or other Department endorsed entity. After receiving the initial training, the qualified inspector shall receive 4 hours of training every 3 years.
- The day-to-day erosion control activities on the site will be monitored by the construction manager. The qualified inspector and his crews will make ***at least one inspection every seven (7) days*** of erosion control devices, and non-stabilized areas during construction. A maintenance inspection report will be completed by the qualified inspector after each inspection. The report form to be completed by the inspector is attached in **Appendix C.** Reports should be compiled and maintained on-site in the SWPPP 3-ring binder.
- All measures will be maintained in good working order; if repair is necessary, it will be initiated within 24 hours of report. The qualified inspector shall take photographs of any needed repairs and also photograph when the repairs are completed. These photographs will be time and date stamped and attached to the weekly inspection report.
- Seeded and planted areas will be inspected for bare spots, washouts, and healthy growth. If necessary, spot reseeding or sodding will be implemented.
- A trained contractor will be an employee from the contracting company responsible for the implementation of the SWPPP. This person will be onsite when any soil disturbing activities are being conducted. The trained contractor must have received 4 hours of Department endorsed training in proper erosion and sediment control principles from a Soil and Water Conservation District, or other Department endorsed entity. After receiving the initial training, the qualified inspector shall receive 4 hours of training every 3 years. This trained contractor cannot conduct the regular SWPPP compliance inspections unless they meet the qualified inspector qualifications.

4.6 Contractor Sequence Form

The operator shall prepare a summary of construction status using the Construction Sequence Form (included in **Appendix D**) once every month. Significant deviations to the sequence and reasons for those deviations (i.e. weather, subcontractor availability, etc.), shall be noted by the contractor. The schedule shall be used to record the dates for initiation of construction, implementation of erosion control measures, stabilization, etc. A copy of this table will be maintained at the construction site and updated.

5.0 POST CONSTRUCTION STORMWATER MANAGEMENT PRACTICES

5.1 Stormwater Management Controls

The project is proposing the use of underground infiltration chambers and an infiltration basin to capture and treat site runoff.

Stormwater runoff from the roof will discharge to the underground infiltration chambers. Runoff will be pretreated via an isolator row.

5.2 Post Construction Stormwater Management Drawings

Post construction stormwater management controls are shown on the Construction Drawings included in **Appendix B.**

5.3 Hydraulic and Hydrologic Analysis

The program utilized for quantifying stormwater runoff rates and volumes was ***HydroCAD*** software, produced by Applied Microcomputer Systems of Chocorua, NH. The SCS 24-hour Type II design storms for 1, 10, and 100-year frequency rainfall were analyzed **(Appendix A).**

- ✓ Hydrologic/hydraulic analysis for all structural components of the stormwater control system for the applicable design storms.
- ✓ Comparison of post-development stormwater runoff conditions with pre-development conditions.
- ✓ Dimensions, material specifications and installation details for each post-construction stormwater control practice.

5.4 Comparison of Pre and Post Construction Stormwater Runoff

Stormwater Quantity. These calculations are based on the HydroCAD analysis.

The design storms used for the pre-development versus post-development comparison were the 1, 10, and 100-year, 24-hour duration, SCS Type II events.

The rainfall amounts for these storms are 2.15, 3.75, and 6.20 inches, respectively.

Under pre-development conditions the majority of the site drains to the south east where runoff flows off site to lands owned by the Saratoga YMCA (AP-2) while the north western portion of the site flows to West Avenue (AP-1).

Post-development stormwater runoff will be directed to a proposed underground infiltration chamber gallery, infiltration trench and an infiltration basin ultimately entering the underlying soils.

The project proposes no increase in flow offsite to the south east or to West Avenue.

	Pre-Development	**Post-Development**
10 year, 24 hour storm (Qp)	0.28 CFS	0.11 CFS
100 year, 24 hour storm (Qf)	0.57 CFS	0.20 CFS

5.5 Water Quality Volume

The following formula was utilized to determine water quality volume:

$$WQ_V = \frac{(P)\ (R_V)(A)}{12}$$

Where:
WQ_V= Water Quality Volume (acre/feet)
P = 90% Rainfall Event
R_V = 0.05 + 0.009(I) where I is impervious cover in percent
A = Subcatchment area in acres

Water quality volume at the site will be managed though the use of underground infiltration chambers and an infiltration pond.

Table 5-1
Water Quality Volume (WQv) Summary

SMP	**Type**	**Provided** (ac-ft)
SMP-1	Underground Infiltration Chambers	0.025
SMP-2	Infiltration Basin/Trench	0.011
Total		0.036

Stormwater runoff from the proposed parking lot and entrance drive will be piped to the underground infiltration chambers (SMP-1). The northern half of the roof will also be directed to the underground infiltration chambers while the southern portion will be directed into gravel drip strips (SMP-2). The remainder of the site and overflow from the gravel drip strips will be directed to the infiltration basin located in

the south east corner of the site (SMP-2). All practices provide WQv/RRv through infiltration. The required WQv for the project site is 0.036 ac-ft which equals the WQv provided (0.036 ac-ft).

5.6 Runoff Reduction Volume

The total Runoff Reduction for this project is 0.036 ac-ft provided by SMP-1 and SMP-2. This is equal to 100% of the WQv.

5.7 Channel Protection Volume (CPv)

Channel protection volume is not required as the entire CPv is reduced through infiltration.

6.0 POST CONSTRUCTION STORMWATER MAINTENANCE

6.1 Mechanism of Operation and Maintenance

John-Paul Construction, Inc. will be responsible for the long term operation and maintenance of the stormwater management practices for the life of the site.

6.2 Maintenance to be Performed

Post-construction maintenance for this project will consist of regular inspections of permanent stormwater management facilities. These maintenance procedures are essential to assure continual performance of the stormwater management practices on your site. During the inspection and any maintenance activity to the stormwater management practices, the responsible party should fill out an inspection and maintenance log (**Appendix C**) to record that it was done.

The operator shall retain a qualified professional to: 1) summarize the inspections conducted, maintenance activities performed and repairs made throughout the year, and 2) certify to the City that the specific stormwater management facilities installed at the site are being properly maintained, are in good operation condition and functioning as intended.

Underground Pipe Storage/Infiltration System

- The systems should be inspected quarterly for the first year and if there are no problems, the system can be inspected annually after the first year.
- If sediment is accumulating on the bottom of the system, pump in water via a flushing port or observation well and then pump the sediment laden water out via the flushing port or the inlet. This can be done with a vacuum truck. The system may have to be flushed multiple times until it is clean of sediment.

- Also, the manifold feeding the pipe storage should be flushed by pumping water in the manhole access and out the flushing port. This should be done during the routine inspection.

Infiltration Basin

- The systems should be inspected quarterly for the first year and if there are no problems, the system can be inspected semi-annually after the first year.
- Periodically mow infiltration basin embankments and remove woody vegetation. Stabilize eroded banks and repair undercut and eroded areas at inflow location, as needed.
- If infiltration system does not drain within 72-hours following a rainfall event, then a qualified professional should assess the condition of the system to determine measures required to restore infiltration function, including but not limited to removal of accumulated sediments or reconstruction of the system.
- Every year disc aerate bottom of ponds.
- Every 5-years scrape bottom of ponds to remove sediment and restore to original cross-section and infiltration rate. Seed or sod to restore ground cover.

Drip Strip (Infiltration Trench)

- Ensure strip is clear of debris and dewatering between storms.
- Replace stone as necessary if strip does not dewater between storms.

Catch Basins

- Sediment removal with a vacuum truck should be done at least once a year, preferably after spring runoff and then in early fall, or when they are at 50% capacity, whichever comes first.
- Any mechanical valves should be operated for inspection every two months.

7.0 CONSTRUCTION WASTE

Waste Materials: All waste materials generated during construction will be disposed at a suitable landfill or transfer station.

Hazardous Waste: The project will not be a generator of hazardous waste and it is not anticipated that any hazardous waste will be generated during construction. If there are any materials generated, a licensed hazardous waste carrier will be contracted to dispose the hazardous material at a suitable disposal site. If hazardous materials are discovered during construction, the work will be stopped until the issue is resolved.

Waste: Portable sanitary facilities will be made available to construction personnel and will be serviced regularly.

8.0 TEMPORARY STABILIZATION FOR FROZEN CONDITIONS

The following temporary stabilization measures **MUST** be performed when construction is occurring during winter/frozen ground conditions. The following requirements do not supersede any other requirements of this SWPPP as they apply to non-frozen ground conditions.

- Perimeter erosion control **MUST** still be installed prior to earthwork disturbance as per this SWPPP.
- Any areas that cannot be seeded to turf by October 1st or earlier will receive a temporary seeding. The temporary seeding will consist of winter rye seeded at the rate of 120 pounds per acre (2.5 pounds per 1,000 square feet) or stabilized as per the temporary stabilization for winter construction/frozen conditions.
- Any area of disturbance that will remain inactive for a period of 14 consecutive days **MUST** be mulched. This includes any previously disturbed areas that are covered with snow.
- Mulch **MUST** consist of loose straw applied at the rate of 2 to 3 bales (90 to 100 pounds) per thousand square feet.
- Mulch **MUST** be applied uniformly over the area of bare soil or bare soil that is covered with snow. For the latter condition, mulch **MUST** be applied on top of snow.
- Using a tracked vehicle, mulch **MUST** be crimped into the bare soil/snow. The tracked vehicle **MUST** be driven across the mulched areas in at least two directions to maximize crimping of mulch into the soil/snow.
- If mulch gets blown off an area to a significant degree, the site inspector **WILL** require that an area be re-mulched in accordance with Items 2 through 5 above, and this area **WILL** be included on the inspection checklist for the next inspection.
- If a particular area repeatedly experiences loss of mulch due to wind, then the inspector **WILL** require that an alternative method be used to secure the mulch in place. Such alternatives may include the use of netting, tackifier or other methods deemed appropriate by the inspector.
- During periods when snow is melting and/or surface soils are thawing during daytime hours, mulched areas **MUST** be re-tracked (crimped) as per Item 5 above at least once every seven days, more frequently if directed by the inspector. Additional mulch may be required to obtain complete coverage of an area. Biodegradable erosion control matting may be required on steeper slopes.
- Additional stabilization measures for non-frozen ground conditions described in this SWPPP **WILL** be implemented at the time deemed appropriate by the inspector.

During the winter season, if a site has been stabilized and soil disturbing activities have been suspended for the winter, weekly inspections can be suspended. However, monthly inspections must still be conducted. All normal weekly inspections must resume when soil disturbing activities resume.

9.0 SPILL PREVENTION PRACTICES

Good Housekeeping and Material Management Practices

The following good housekeeping and material management practices will be followed on site during the construction project to reduce the risk of spills or other accidental exposure of materials and substances to stormwater runoff.

- Materials will be brought on site in the minimum quantities required.
- All materials stored on site will be stored in a neat, orderly manner in their appropriate containers, and if possible, under a roof or other enclosure.
- Products will be kept in their original containers with the original manufacturer's label.
- Substances will not be mixed with one another unless recommended by the manufacturer.
- Whenever possible, all of a product will be used up before disposal.
- Manufacturer's recommendations for proper use and disposal will be followed.
- The construction manager or his designee will inspect regularly to ensure proper use and disposal of materials on site.
- The contractor shall prohibit washing of tools, equipment, and machinery in or within 100 feet of any watercourse or wetland.
- All above grade storage tanks are to be protected from vehicle damage by temporary barriers.

Inventory for Pollution Prevention Plan

The materials and substances listed below are expected to be on-site during construction.

- Petroleum for fueling vehicles will be stored in above ground storage tanks. Tanks will either be steel with an enclosure capable of holding 110% of the storage tank volume or of a Con-Store, concrete encased type typically employed by NYSDOT. Hydraulic oil and other oils will be stored in their original containers. Concrete and asphalt will be stored in the original delivery trucks.
- Fertilizer may be stored on site in its original container for a short period of time prior to seeding. Original containers will be safely piled on pallets or similar devices to protect from moisture.

- Paints and other similar materials will be stored in their original containers and all empty containers will be disposed of in accordance with label directions.
- Portable sanitary facilities, which contain chemical disinfectants (deodorants) will be located on-site, with the disinfectants held in the tank of the toilet.

Hazardous Products

These practices are used to reduce the risks associated with hazardous materials.

- Products will be kept in original containers unless they are not re-sealable.
- Original labels and material safety data sheets will be retained; they contain important product information.
- If surplus product must be disposed of, manufacturers' or local and State recommended methods for proper disposal will be followed.

Spill Prevention

The following product specific practices will be followed on site.

Petroleum Products:

- Construction personnel should be made aware that emergency telephone numbers are located in this SWPPP.
- The contractor shall immediately contact NYSDEC in the event of a spill, and shall take all appropriate steps to contain the spill, including construction of a dike around the spill and placing absorbent material over this spill.
- The contractor shall instruct personnel that spillage of fuels, oils, and similar chemicals must be avoided and will have arranged with a qualified spill remediation company to serve the site.
- Fuels, oils, and chemicals will be stored in appropriate and tightly capped containers. Containers shall not be disposed of on the project site.
- Fuels, oils, chemicals, material, equipment, and sanitary facilities will be stored/located away from trees and at least 100 feet from streams, wells, wet areas, and other environmentally sensitive sites.
- Dispose of chemical containers and surplus chemicals off the project site in accordance with label directions.
- Use tight connections and hoses with appropriate nozzles in all operations involving fuels, lubricating materials or chemicals.
- Use funnels when pouring fuels, lubricating materials or chemicals.
- Refueling and cleaning of construction equipment will take place in parking areas to provide rapid response to emergency situations.

- All on-site vehicles will be monitored for leaks and receive regular preventative maintenance to reduce the chance of leakage. Any vehicle leaking fuel or hydraulic fuel will be immediately scheduled for repairs and use will be discontinued until repairs are made.

Fertilizers:

- Fertilizer will be stored in its original containers on pallets with water resistant coverings.
- Proper delivery scheduling will minimize storage time.
- Any damaged containers will be repaired immediately upon discovery and any released fertilizer recovered to the fullest extent practicable.

Paints:

- All containers will be tightly sealed and stored when not required for use.
- Excess paint will not be discharged to the storm water system or wastewater system, but will be properly disposed of according to manufacturers' instructions or State and local regulations.

Concrete Trucks:

- Concrete trucks will be allowed to wash out or discharge surplus concrete or drum wash water only at designated locations on site.

Asphalt Trucks:

- Asphalt trucks shall not discharge surplus asphalt on the site.

Spill Control Practices

In addition to the good housekeeping and material management practices discussed in the previous sections of this plan, the following practices will be followed for spill prevention and cleanup. The construction manager or site superintendent responsible for the day-to-day site operations will be the spill prevention and cleanup coordinator. He will designate at least three other site personnel who will receive spill prevention and cleanup training. These individuals will each become responsible for a particular phase of prevention and cleanup. The names of responsible spill personnel will be posted in the material storage area and in the onsite construction office or trailer.

- Manufacturers' recommended methods for spill cleanup will be clearly posted and site personnel will be made aware of the procedures and the location of the information and cleanup supplies. Any spill in excess or suspected to be in excess of two gallons will be reported to the NYSDEC Regional Spill Response Unit. Notification to the

NYSDEC (1-800-457-7362) must be completed within two hours of the discovery of the spill.

- Materials and equipment necessary for spill cleanup will be kept in the material storage area onsite. Equipment and materials will include but not be limited to absorbent pads, brooms, dust pans, mops, rags, gloves, goggles, activated clay, sand, sawdust, and plastic and metal trash containers specifically for this purpose.
- All spills will be cleaned up immediately after discovery.
- The spill area will be kept well ventilated and personnel will wear appropriate protective clothing to prevent injury from contact with spilled substance.
- Spills of toxic or hazardous material will be reported to the appropriate State or local government agency, regardless of the size

10.0 CERTIFICATIONS

Preparer Certification of Compliance with Federal, State, and Local Regulations

This Stormwater Pollution Prevention Plan was prepared in accordance with the City of Saratoga Springs regulations.

Name: Douglas Heller Title: Professional Engineer

Signature: _____ Date: _____

Company Name: The LA Group, PC

Owner Pollution Prevention Plan Certification

I certify under penalty of law that this document and all attachments were prepared under my direction or supervision to assure that qualified personnel properly gathered and evaluated the information submitted. Based on my inquiry of the person or persons who are directly responsible for gathering the information, the information submitted is, to the best of my knowledge and belief, true, accurate, and complete. I am aware that false statements made herein are punishable as a Class A misdemeanor pursuant to Section 210.45 of the Penal Law.

I understand that SWPPP requires site inspections be conducted by a qualified professional once every seven (7) days. These inspections shall be performed by a qualified professional as defined in the SWPPP.

The Owner/Operator will be held financially responsible for any and all fines related to work tasks that are not specified by the Contractor(s)/Subcontractor(s) below.

Name: John Luke Hodorowski Title: Owner

Signature: _____ Date: _____

Company Name: John-Paul Builders, Inc.

Contractor and Subcontractor Certification

I hereby certify that I understand and agree to comply with the terms and conditions of the SWPPP and agree to implement any corrective actions identified by the qualified inspector during a site inspection. I also understand that the owner or operator must comply with the terms and conditions of the New York State Pollutant Discharge Elimination System ("SPDES") general permit for stormwater discharges from construction activities and that it is unlawful for any person to cause or contribute to a violation of water quality standards. Furthermore, I understand that certifying false, incorrect or inaccurate information is a violation of the referenced permit and the laws of the State of New York and could subject me to criminal, civil and/or administrative proceeding.

Name _____ Title _____

Signature _____ Date _____

Company Name _____
Address _____
City, State, Zip _____
Phone Number _____

SWPPP Components You Are Responsible For

1. _____
2. _____
3. _____
4. _____
5. _____
6. _____

Name of Trained Individual Responsible for SWPPP Implementation _____ Title _____

Signature of Trained Individual Responsible for SWPPP Implementation _____ Date _____

Contractor and Subcontractor Certification

I hereby certify that I understand and agree to comply with the terms and conditions of the SWPPP and agree to implement any corrective actions identified by the qualified inspector during a site inspection. I also understand that the owner or operator must comply with the terms and conditions of the New York State Pollutant Discharge Elimination System ("SPDES") general permit for stormwater discharges from construction activities and that it is unlawful for any person to cause or contribute to a violation of water quality standards. Furthermore, I understand that certifying false, incorrect or inaccurate information is a violation of the referenced permit and the laws of the State of New York and could subject me to criminal, civil and/or administrative proceeding.

Name _____ Title _____

Signature _____ Date _____

Company Name _____
Address _____
City, State, Zip _____
Phone Number _____

SWPPP Components You Are Responsible For

1. _____
2. _____
3. _____
4. _____
5. _____
6. _____

Name of Trained Individual Responsible for SWPPP Implementation _____ Title _____

Signature of Trained Individual Responsible for SWPPP Implementation _____ Date _____

Contractor and Subcontractor Certification

I hereby certify that I understand and agree to comply with the terms and conditions of the SWPPP and agree to implement any corrective actions identified by the qualified inspector during a site inspection. I also understand that the owner or operator must comply with the terms and conditions of the New York State Pollutant Discharge Elimination System ("SPDES") general permit for stormwater discharges from construction activities and that it is unlawful for any person to cause or contribute to a violation of water quality standards. Furthermore, I understand that certifying false, incorrect or inaccurate information is a violation of the referenced permit and the laws of the State of New York and could subject me to criminal, civil and/or administrative proceeding.

Name _____ Title _____

Signature _____ Date _____

Company Name _____
Address _____
City, State, Zip _____
Phone Number _____

SWPPP Components You Are Responsible For

1. _____
2. _____
3. _____
4. _____
5. _____
6. _____

Name of Trained Individual Responsible for SWPPP Implementation _____ Title _____

Signature of Trained Individual Responsible for SWPPP Implementation _____ Date _____

Contractor and Subcontractor Certification

I hereby certify that I understand and agree to comply with the terms and conditions of the SWPPP and agree to implement any corrective actions identified by the qualified inspector during a site inspection. I also understand that the owner or operator must comply with the terms and conditions of the New York State Pollutant Discharge Elimination System ("SPDES") general permit for stormwater discharges from construction activities and that it is unlawful for any person to cause or contribute to a violation of water quality standards. Furthermore, I understand that certifying false, incorrect or inaccurate information is a violation of the referenced permit and the laws of the State of New York and could subject me to criminal, civil and/or administrative proceeding.

Name _____ Title _____

Signature _____ Date _____

Company Name _____
Address _____
City, State, Zip _____
Phone Number _____

SWPPP Components You Are Responsible For

1. _____
2. _____
3. _____
4. _____
5. _____
6. _____

Name of Trained Individual Responsible for SWPPP Implementation _____ Title _____

Signature of Trained Individual Responsible for SWPPP Implementation _____ Date _____

11.0 DEFINITIONS

Construction Activity(ies) - means any clearing, grading, excavation, filling, demolition, or stockpiling activities that result in soil disturbance. Clearing activities can include, but are not limited to, logging equipment operation, the cutting and skidding of trees, tree removal, stump removal and/or brush removal. Construction activity does not include routine maintenance that is performed to maintain the original line and grade, hydraulic capacity, or original purpose of a facility.

Construction Phasing Plan - a plan designed to construct particular portions of an individual project at different times. Phasing is often used when a project is very large to limit the disturbance at a single time to 5 acres per phase.

Erosion and Sediment Control Practices – temporary measures installed prior to construction and maintained during construction to temporarily treat any stormwater runoff. Once construction is completed and post-construction stormwater management practices are installed and the site is stabilized, the erosion and sediment control practices are removed from the site.

Final Stabilization - means that all soil disturbance activities have ceased and a uniform, perennial vegetative cover with a density of eighty (80) percent over the entire pervious surface has been established; or other equivalent stabilization measures, such as permanent landscape mulches, rock rip-rap or washed/crushed stone have been applied on all disturbed areas that are not covered by permanent structures, concrete pavement.

Green Infrastructure – in the context of stormwater management, the term green infrastructure includes a wide array of practices at multiple scales to manage and treat stormwater, maintain and restore natural hydrology and ecological function by infiltration, evapotranspiration, capture and reuse of stormwater, and establishment of natural vegetative features. On a regional scale, green infrastructure is the preservation and restoration of natural landscape features, such as forests, floodplains and wetlands, coupled with policies such as infill and redevelopment that reduce overall imperviousness in a watershed or ecoregion. On the local scale green infrastructure consist of site and neighborhood specific practices and runoff reduction techniques. Such practices essentially result in runoff reduction and or establishment of habitat areas with significant utilization of soils, vegetation, and engineered media rather than traditional hardscape collection, conveyance and storage structures. Some examples include green roofs, trees and tree boxes, pervious pavement, rain gardens, vegetated swales, planters, reforestation and protection and enhancement of riparian buffers and floodplains.

Impervious Area (Cover) - means all impermeable surfaces that cannot effectively infiltrate rainfall. This includes paved, concrete and gravel surfaces (i.e. parking lots, driveways, roads, runways, and sidewalks); building rooftops, and miscellaneous impermeable structures such as patios, pools, and sheds.

Municipal Separate Storm Sewer (MS4) – a conveyance or system of conveyances (including roads with drainage systems, municipal streets, catch basins, curbs, gutters, ditches, man-made channels, or storm drains):

i. Owned or operated by a state, city, town, borough, county, parish, district, association, or other public body (created by or pursuant to State law) having jurisdiction over disposal of sewage, industrial wastes, stormwater, or other wastes, including special districts under State law such as a sewer district, flood control district or drainage district, or similar entity, or an Indian tribe or an authorized Indian tribal organization, or a designated and approved management agency under section 208 of the CWA that discharges to surface waters of the State.
ii. Designed or used for collecting or conveying stormwater
iii. Which is not a combined sewer
iv. Which is not part of a Publicly Owned Treatment Works (POTW) as defined at 40 CFR 122.2.

Notice of Intent – a standardized format notification sent to the NYSDEC to inform them of the proposed activity to be sent after the SWPPP has been completed.

Owner or Operator – means the person, persons or legal entity which owns or leases the property on which the construction activity is occurring; and/or an entity that has operational control over the construction plans and specifications, including the ability to make modifications to the plans and specifications.

Post-Construction Stormwater Management Practices – permanent devices constructed or installed onsite to treat stormwater from a site when construction is completed.

Qualified Inspector - a Licensed Professional Engineer, Certified Professional in Erosion and Sediment Control (CPESC), Registered Landscape Architect, or someone working under the direct supervision of, and at the same company as, the licensed Professional Engineer or Registered Landscape Architect, provided they have received 4 hours of Department endorsed training in proper erosion and sediment control principles from a Soil and Water Conservation District, or other Department endorsed entity. After receiving the initial training, the qualified inspector shall receive 4 hours of training every 3 years.

Regulated, Traditional Land Use Control MS4 - means a city, town, or village with land use control authority that is required to gain coverage under New York State DEC's SPDES General Permit for Stormwater Discharges from Municipal Separate Stormwater Sewer Systems (MS4s).

Sequence of Operations – the individual steps and their specific order which are undertaken in order to construct a project or a given phase of a project from beginning to end. (i.e. clearing, grading, foundation work, landscaping, etc.)

State Pollutant Discharge Elimination System (SPDES) – means the system established pursuant to Article 17 of the Environmental Conservation Law (ECL) and 6 NYCRR Part 750 for issuance of permits authorizing discharges to the waters of the state.

Stormwater Pollution Prevention Plan (SWPPP) - a report that is compiled providing detailed information about the proposed activity and the specifics to how the stormwater will be managed during construction and after construction is completed.

Surface Waters of the State - shall be construed to include lakes, bays, sounds, ponds, impounding reservoirs, springs, rivers, streams, creeks, estuaries, marshes, inlets, canals, the Atlantic Ocean, within the territorial seas of the state of New York and all other bodies of surface water, natural or artificial, inland or coastal, fresh or salt, public or private (except those private waters that do not combine or effect a junction with natural surface or underground waters), which are wholly or partially within or bordering the state or within its jurisdiction. Waters of the state are further defined in 6 NYCRR Parts 800-941.

Temporary Stabilization – means that exposed soil has been covered with material(s) as set forth in the technical standard, New York Standards and Specifications for Erosion and Sediment Control, to prevent the exposed soil from eroding. The materials can include, but are not limited to, mulch, seed and mulch, and erosion control mats (e.g. jute twisted yarn, excelsior wood fiber mats).

Trained Contractor – means an employee from a contracting (construction) company responsible for the day to day implementation of the SWPPP. The trained contractor must have received 4 hours of Department endorsed training in proper erosion and sediment control principles from a Soil and Water Conservation District, or other Department endorsed entity. After receiving the initial training, the qualified inspector shall receive 4 hours of training every 3 years.

It can also mean an employee from the contracting (construction) company that meets the qualified inspector qualifications (e.g. licensed Professional Engineer, Certified Professional in Erosion and Sediment Control (CPESC), Registered Landscape Architect, or someone working under the direct supervision of, and at the same company as, the licensed Professional Engineer or Registered Landscape Architect, provided they have received 4 hours of Department endorsed training in proper erosion and sediment control principles from a Soil and Water Conservation District, or other Department endorsed entity.

Appendix A

HydroCAD Calculations and Storm Data

HYDROCAD CALCULATIONS
PRE DEVELOPMENT

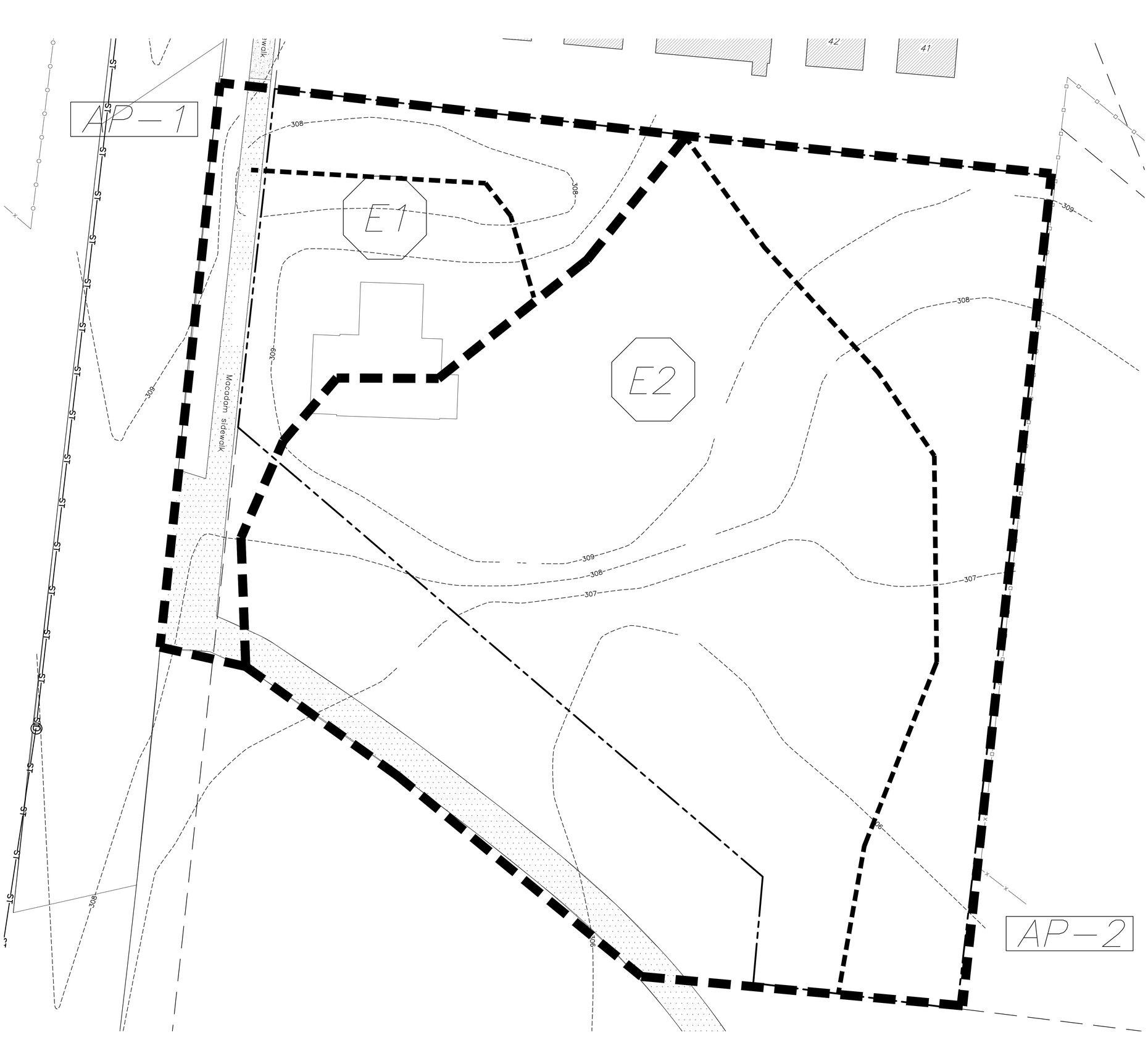

LEGEND

- SUBCATCHMENT BOUNDARY
- TIME OF CONCENTRATION PATH
- E1 — SUBCATCHMENT ID
- AP-1 — ANALYSIS POINT

GRAPHIC SCALE

10 0 5 10 20

1 inch = 10 feet

Approval

Approved under authority of a resolution adopted _____ by the Planning Board of the City of Saratoga Springs.

_____ Chairperson

Date Signed _____

the LA group
Landscape Architecture and Engineering, PC

40 Long Alley
Saratoga Springs
New York 12866

P 518/587-8100
F 518/587-0180
www.thelagroup.com

Unauthorized alteration or addition to this document is a violation of Section 7209 of the New York State Education Law

© the LA Group 2008

Design MCB

Drawn MCB

Checked CMI

PREPARED FOR:
John-Paul Builders, LLC
796 Burdeck Street
Schenectady, NY 12306

246 WEST AVENUE APARTMENTS

SARATOGA SPRINGS, NY

Title
EXISTING CONDITIONS WATERSHED MAP

Revisions

City #:
Project: 201178
Date: 6/23/2016

Drawing
W-1

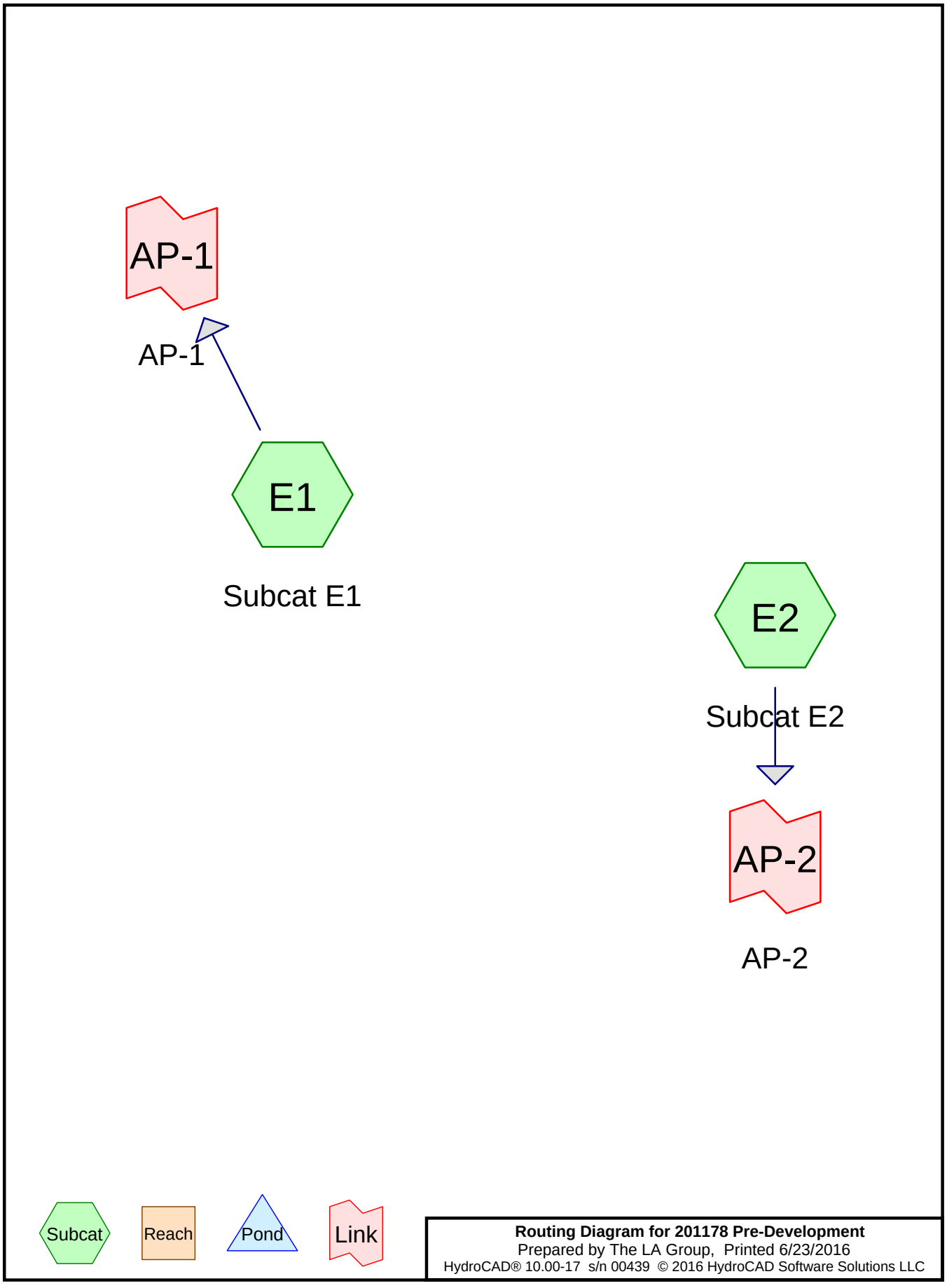

Routing Diagram for 201178 Pre-Development
Prepared by The LA Group, Printed 6/23/2016
HydroCAD® 10.00-17 s/n 00439 © 2016 HydroCAD Software Solutions LLC

Area Listing (all nodes)

Area (sq-ft)	CN	Description (subcatchment-numbers)
19,423	39	>75% Grass cover, Good, HSG A (E1, E2)
2,705	98	Paved parking, HSG A (E1, E2)
9,702	30	Woods, Good, HSG A (E2)
31,830	**41**	**TOTAL AREA**

Soil Listing (all nodes)

Area (sq-ft)	Soil Group	Subcatchment Numbers
31,830	HSG A	E1, E2
0	HSG B	
0	HSG C	
0	HSG D	
0	Other	
31,830		**TOTAL AREA**

Ground Covers (all nodes)

HSG-A (sq-ft)	HSG-B (sq-ft)	HSG-C (sq-ft)	HSG-D (sq-ft)	Other (sq-ft)	Total (sq-ft)	Ground Cover	Sub Num
19,423	0	0	0	0	19,423	>75% Grass cover, Good	
2,705	0	0	0	0	2,705	Paved parking	
9,702	0	0	0	0	9,702	Woods, Good	
31,830	**0**	**0**	**0**	**0**	**31,830**	**TOTAL AREA**	

Time span=0.00-24.00 hrs, dt=0.05 hrs, 481 points
Runoff by SCS TR-20 method, UH=SCS, Weighted-Q
Reach routing by Stor-Ind+Trans method - Pond routing by Stor-Ind method

Subcatchment E1: Subcat E1 Runoff Area=6,599 sf 22.24% Impervious Runoff Depth>0.43"
Flow Length=80' Slope=0.0190 '/' Tc=9.3 min CN=WQ Runoff=0.09 cfs 235 cf

Subcatchment E2: Subcat E2 Runoff Area=25,231 sf 4.91% Impervious Runoff Depth>0.09"
Flow Length=215' Tc=12.3 min CN=WQ Runoff=0.07 cfs 198 cf

Link AP-1: AP-1 Inflow=0.09 cfs 235 cf
Primary=0.09 cfs 235 cf

Link AP-2: AP-2 Inflow=0.07 cfs 198 cf
Primary=0.07 cfs 198 cf

Total Runoff Area = 31,830 sf Runoff Volume = 433 cf Average Runoff Depth = 0.16"
91.50% Pervious = 29,125 sf 8.50% Impervious = 2,705 sf

Time span=0.00-24.00 hrs, dt=0.05 hrs, 481 points
Runoff by SCS TR-20 method, UH=SCS, Weighted-Q
Reach routing by Stor-Ind+Trans method - Pond routing by Stor-Ind method

Subcatchment E1: Subcat E1 Runoff Area=6,599 sf 22.24% Impervious Runoff Depth>0.80"
Flow Length=80' Slope=0.0190 '/' Tc=9.3 min CN=WQ Runoff=0.16 cfs 439 cf

Subcatchment E2: Subcat E2 Runoff Area=25,231 sf 4.91% Impervious Runoff Depth>0.19"
Flow Length=215' Tc=12.3 min CN=WQ Runoff=0.12 cfs 390 cf

Link AP-1: AP-1 Inflow=0.16 cfs 439 cf
Primary=0.16 cfs 439 cf

Link AP-2: AP-2 Inflow=0.12 cfs 390 cf
Primary=0.12 cfs 390 cf

Total Runoff Area = 31,830 sf Runoff Volume = 829 cf Average Runoff Depth = 0.31"
91.50% Pervious = 29,125 sf 8.50% Impervious = 2,705 sf

Time span=0.00-24.00 hrs, dt=0.05 hrs, 481 points
Runoff by SCS TR-20 method, UH=SCS, Weighted-Q
Reach routing by Stor-Ind+Trans method - Pond routing by Stor-Ind method

Subcatchment E1: Subcat E1 Runoff Area=6,599 sf 22.24% Impervious Runoff Depth>1.71"
Flow Length=80' Slope=0.0190 '/' Tc=9.3 min CN=WQ Runoff=0.29 cfs 943 cf

Subcatchment E2: Subcat E2 Runoff Area=25,231 sf 4.91% Impervious Runoff Depth>0.61"
Flow Length=215' Tc=12.3 min CN=WQ Runoff=0.28 cfs 1,286 cf

Link AP-1: AP-1 Inflow=0.29 cfs 943 cf
Primary=0.29 cfs 943 cf

Link AP-2: AP-2 Inflow=0.28 cfs 1,286 cf
Primary=0.28 cfs 1,286 cf

Total Runoff Area = 31,830 sf Runoff Volume = 2,228 cf Average Runoff Depth = 0.84"
91.50% Pervious = 29,125 sf 8.50% Impervious = 2,705 sf

Summary for Subcatchment E1: Subcat E1

Runoff = 0.29 cfs @ 12.01 hrs, Volume= 943 cf, Depth> 1.71"

Runoff by SCS TR-20 method, UH=SCS, Weighted-Q, Time Span= 0.00-24.00 hrs, dt= 0.05 hrs
Type II 24-hr 100 Year Rainfall=6.20"

Area (sf)	CN	Description
5,132	39	>75% Grass cover, Good, HSG A
1,468	98	Paved parking, HSG A
6,599		Weighted Average
5,132		77.76% Pervious Area
1,468		22.24% Impervious Area

Tc (min)	Length (feet)	Slope (ft/ft)	Velocity (ft/sec)	Capacity (cfs)	Description
9.3	80	0.0190	0.14		**Sheet Flow,** Grass: Short n= 0.150 P2= 2.60"

Summary for Subcatchment E2: Subcat E2

Runoff = 0.28 cfs @ 12.06 hrs, Volume= 1,286 cf, Depth> 0.61"

Runoff by SCS TR-20 method, UH=SCS, Weighted-Q, Time Span= 0.00-24.00 hrs, dt= 0.05 hrs
Type II 24-hr 100 Year Rainfall=6.20"

Area (sf)	CN	Description
14,291	39	>75% Grass cover, Good, HSG A
1,238	98	Paved parking, HSG A
9,702	30	Woods, Good, HSG A
25,231		Weighted Average
23,993		95.09% Pervious Area
1,238		4.91% Impervious Area

Tc (min)	Length (feet)	Slope (ft/ft)	Velocity (ft/sec)	Capacity (cfs)	Description
9.2	100	0.0300	0.18		**Sheet Flow,** Grass: Short n= 0.150 P2= 2.60"
3.1	115	0.0150	0.61		**Shallow Concentrated Flow,** Woodland Kv= 5.0 fps
12.3	215	Total			

Summary for Link AP-1: AP-1

Inflow Area = 6,599 sf, 22.24% Impervious, Inflow Depth > 1.71" for 100 Year event
Inflow = 0.29 cfs @ 12.01 hrs, Volume= 943 cf
Primary = 0.29 cfs @ 12.01 hrs, Volume= 943 cf, Atten= 0%, Lag= 0.0 min

Primary outflow = Inflow, Time Span= 0.00-24.00 hrs, dt= 0.05 hrs

Summary for Link AP-2: AP-2

Inflow Area = 25,231 sf, 4.91% Impervious, Inflow Depth > 0.61" for 100 Year event
Inflow = 0.28 cfs @ 12.06 hrs, Volume= 1,286 cf
Primary = 0.28 cfs @ 12.06 hrs, Volume= 1,286 cf, Atten= 0%, Lag= 0.0 min

Primary outflow = Inflow, Time Span= 0.00-24.00 hrs, dt= 0.05 hrs

HYDROCAD CALCULATIONS
POST DEVELOPMENT

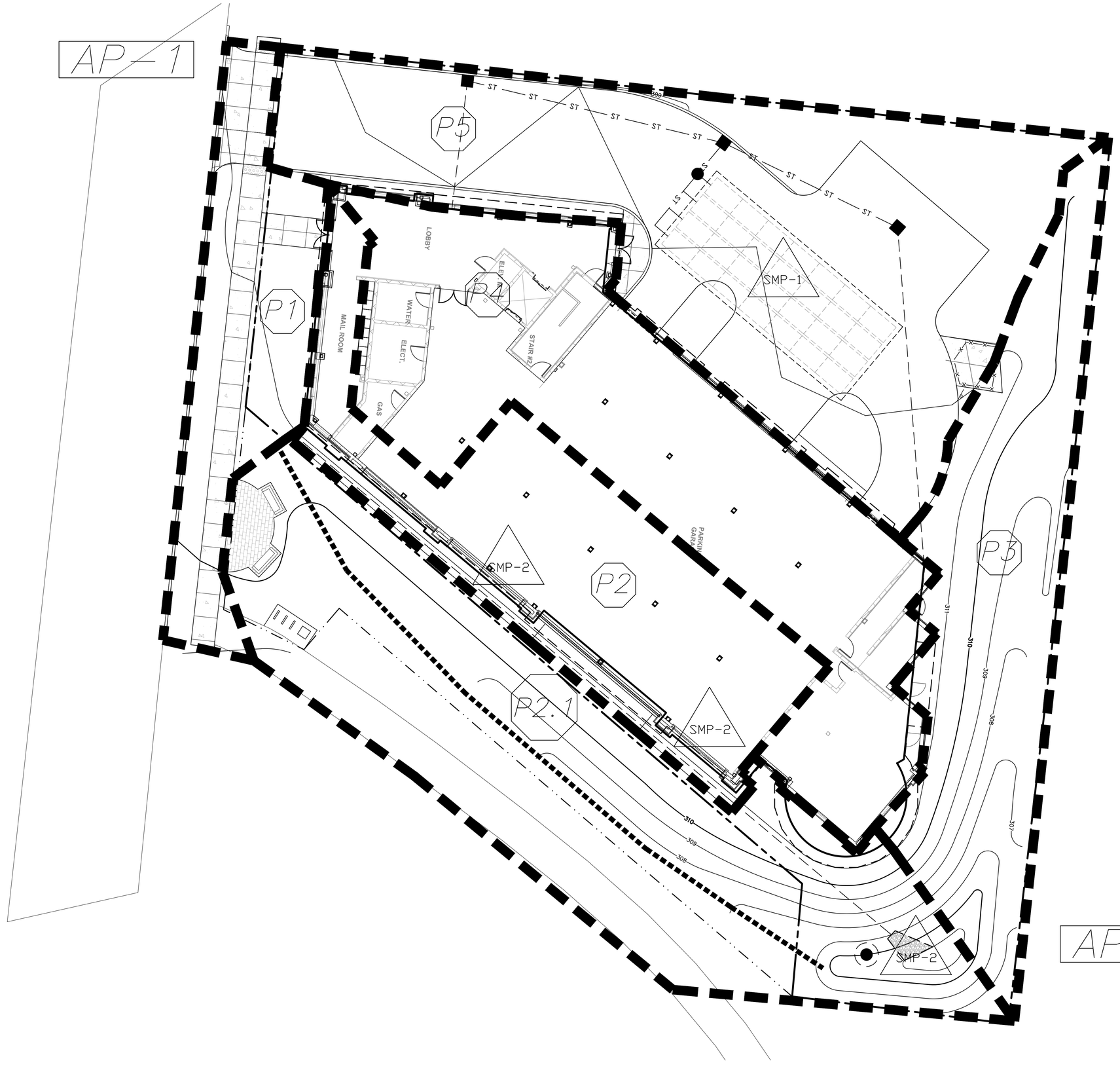

LEGEND

	SUBCATCHMENT BOUNDARY
	TIME OF CONCENTRATION PATH
P1	SUBCATCHMENT ID
SMP1	STORMWATER FACILITY
AP-1	ANALYSIS POINT

GRAPHIC SCALE

10 0 5 10 20

1 inch = 10 feet

Approval

Approved under authority of a resolution adopted _____ by the Planning Board of the City of Saratoga Springs.

_____ Chairperson

Date Signed _____

the LA group
Landscape Architecture and Engineering, PC
40 Long Alley
Saratoga Springs
New York 12866
P 518/587-8100
F 518/587-0180
www.thelagroup.com

Unauthorized alteration or addition to this document is a violation of Section 7209 of the New York State Education Law

© the LA Group 2008

Design MCB

Drawn MCB

Checked CMI

PREPARED FOR:
John-Paul Builders, LLC
796 Burdeck Street
Schenectady, NY 12306

246 WEST AVENUE APARTMENTS

SARATOGA SPRINGS, NY

Title
PROPOSED CONDITIONS WATERSHED MAP

Revisions

City #:
Project: 201178
Date: 6/23/2016

Drawing
W-2

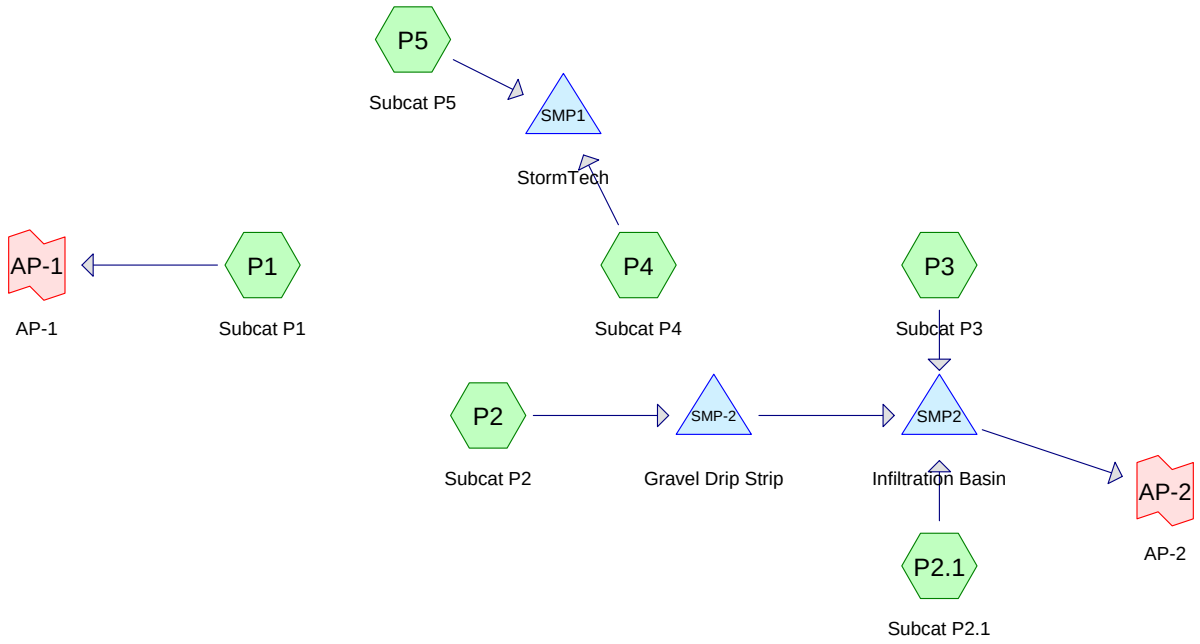

Subcat Reach Pond Link

Routing Diagram for 201178 Post-Development
Prepared by The LA Group, Printed 6/23/2016
HydroCAD® 10.00-17 s/n 00439 © 2016 HydroCAD Software Solutions LLC

Area Listing (selected nodes)

Area (sq-ft)	CN	Description (subcatchment-numbers)
14,181	39	>75% Grass cover, Good, HSG A (P1, P2, P2.1, P3, P4, P5)
17,663	98	Paved parking, HSG A (P1, P2, P2.1, P3, P4, P5)
31,844	**72**	**TOTAL AREA**

Soil Listing (selected nodes)

Area (sq-ft)	Soil Group	Subcatchment Numbers
31,844	HSG A	P1, P2, P2.1, P3, P4, P5
0	HSG B	
0	HSG C	
0	HSG D	
0	Other	
31,844		**TOTAL AREA**

Ground Covers (selected nodes)

HSG-A (sq-ft)	HSG-B (sq-ft)	HSG-C (sq-ft)	HSG-D (sq-ft)	Other (sq-ft)	Total (sq-ft)	Ground Cover	Sub Num
14,181	0	0	0	0	14,181	>75% Grass cover, Good	
17,663	0	0	0	0	17,663	Paved parking	
31,844	**0**	**0**	**0**	**0**	**31,844**	**TOTAL AREA**	

Time span=0.00-24.00 hrs, dt=0.05 hrs, 481 points
Runoff by SCS TR-20 method, UH=SCS, Weighted-Q
Reach routing by Stor-Ind+Trans method - Pond routing by Stor-Ind method

Subcatchment P1: Subcat P1 Runoff Area=2,357 sf 40.48% Impervious Runoff Depth>0.78"
Tc=6.0 min CN=WQ Runoff=0.06 cfs 153 cf

Subcatchment P2: Subcat P2 Runoff Area=4,076 sf 84.94% Impervious Runoff Depth>1.63"
Tc=6.0 min CN=WQ Runoff=0.23 cfs 554 cf

Subcatchment P2.1: Subcat P2.1 Runoff Area=7,028 sf 16.75% Impervious Runoff Depth>0.32"
Flow Length=160' Slope=0.0250 '/' Tc=10.3 min CN=WQ Runoff=0.07 cfs 188 cf

Subcatchment P3: Subcat P3 Runoff Area=4,048 sf 1.07% Impervious Runoff Depth>0.02"
Tc=6.0 min CN=WQ Runoff=0.00 cfs 7 cf

Subcatchment P4: Subcat P4 Runoff Area=6,146 sf 99.96% Impervious Runoff Depth>1.92"
Tc=6.0 min CN=WQ Runoff=0.41 cfs 984 cf

Subcatchment P5: Subcat P5 Runoff Area=8,189 sf 71.84% Impervious Runoff Depth>1.38"
Tc=6.0 min CN=WQ Runoff=0.39 cfs 942 cf

Pond SMP-2: Gravel Drip Strip Peak Elev=309.55' Storage=63 cf Inflow=0.23 cfs 554 cf
Discarded=0.08 cfs 506 cf Primary=0.11 cfs 48 cf Outflow=0.19 cfs 554 cf

Pond SMP1: StormTech Peak Elev=304.84' Storage=521 cf Inflow=0.81 cfs 1,926 cf
Outflow=0.16 cfs 1,925 cf

Pond SMP2: Infiltration Basin Peak Elev=304.27' Storage=104 cf Inflow=0.18 cfs 243 cf
Discarded=0.03 cfs 241 cf Primary=0.00 cfs 0 cf Outflow=0.03 cfs 241 cf

Link AP-1: AP-1 Inflow=0.06 cfs 153 cf
Primary=0.06 cfs 153 cf

Link AP-2: AP-2 Inflow=0.00 cfs 0 cf
Primary=0.00 cfs 0 cf

Total Runoff Area = 31,844 sf Runoff Volume = 2,828 cf Average Runoff Depth = 1.07"
44.53% Pervious = 14,181 sf 55.47% Impervious = 17,663 sf

Time span=0.00-24.00 hrs, dt=0.05 hrs, 481 points
Runoff by SCS TR-20 method, UH=SCS, Weighted-Q
Reach routing by Stor-Ind+Trans method - Pond routing by Stor-Ind method

Subcatchment P1: Subcat P1 Runoff Area=2,357 sf 40.48% Impervious Runoff Depth>1.44"
Tc=6.0 min CN=WQ Runoff=0.11 cfs 282 cf

Subcatchment P2: Subcat P2 Runoff Area=4,076 sf 84.94% Impervious Runoff Depth>2.99"
Tc=6.0 min CN=WQ Runoff=0.41 cfs 1,015 cf

Subcatchment P2.1: Subcat P2.1 Runoff Area=7,028 sf 16.75% Impervious Runoff Depth>0.61"
Flow Length=160' Slope=0.0250 '/' Tc=10.3 min CN=WQ Runoff=0.12 cfs 356 cf

Subcatchment P3: Subcat P3 Runoff Area=4,048 sf 1.07% Impervious Runoff Depth>0.06"
Tc=6.0 min CN=WQ Runoff=0.01 cfs 21 cf

Subcatchment P4: Subcat P4 Runoff Area=6,146 sf 99.96% Impervious Runoff Depth>3.51"
Tc=6.0 min CN=WQ Runoff=0.73 cfs 1,799 cf

Subcatchment P5: Subcat P5 Runoff Area=8,189 sf 71.84% Impervious Runoff Depth>2.53"
Tc=6.0 min CN=WQ Runoff=0.70 cfs 1,727 cf

Pond SMP-2: Gravel Drip Strip Peak Elev=309.71' Storage=86 cf Inflow=0.41 cfs 1,015 cf
Discarded=0.08 cfs 802 cf Primary=0.31 cfs 213 cf Outflow=0.39 cfs 1,015 cf

Pond SMP1: StormTech Peak Elev=305.56' Storage=1,153 cf Inflow=1.43 cfs 3,525 cf
Outflow=0.17 cfs 3,524 cf

Pond SMP2: Infiltration Basin Peak Elev=305.15' Storage=290 cf Inflow=0.44 cfs 589 cf
Discarded=0.08 cfs 590 cf Primary=0.00 cfs 0 cf Outflow=0.08 cfs 590 cf

Link AP-1: AP-1 Inflow=0.11 cfs 282 cf
Primary=0.11 cfs 282 cf

Link AP-2: AP-2 Inflow=0.00 cfs 0 cf
Primary=0.00 cfs 0 cf

Total Runoff Area = 31,844 sf Runoff Volume = 5,198 cf Average Runoff Depth = 1.96"
44.53% Pervious = 14,181 sf 55.47% Impervious = 17,663 sf

Time span=0.00-24.00 hrs, dt=0.05 hrs, 481 points
Runoff by SCS TR-20 method, UH=SCS, Weighted-Q
Reach routing by Stor-Ind+Trans method - Pond routing by Stor-Ind method

Subcatchment P1: Subcat P1 Runoff Area=2,357 sf 40.48% Impervious Runoff Depth>2.71"
Tc=6.0 min CN=WQ Runoff=0.20 cfs 533 cf

Subcatchment P2: Subcat P2 Runoff Area=4,076 sf 84.94% Impervious Runoff Depth>5.14"
Tc=6.0 min CN=WQ Runoff=0.69 cfs 1,744 cf

Subcatchment P2.1: Subcat P2.1 Runoff Area=7,028 sf 16.75% Impervious Runoff Depth>1.41"
Flow Length=160' Slope=0.0250 '/' Tc=10.3 min CN=WQ Runoff=0.24 cfs 828 cf

Subcatchment P3: Subcat P3 Runoff Area=4,048 sf 1.07% Impervious Runoff Depth>0.56"
Tc=6.0 min CN=WQ Runoff=0.05 cfs 189 cf

Subcatchment P4: Subcat P4 Runoff Area=6,146 sf 99.96% Impervious Runoff Depth>5.95"
Tc=6.0 min CN=WQ Runoff=1.21 cfs 3,050 cf

Subcatchment P5: Subcat P5 Runoff Area=8,189 sf 71.84% Impervious Runoff Depth>4.42"
Tc=6.0 min CN=WQ Runoff=1.17 cfs 3,017 cf

Pond SMP-2: Gravel Drip Strip Peak Elev=309.95' Storage=118 cf Inflow=0.69 cfs 1,744 cf
Discarded=0.08 cfs 1,246 cf Primary=0.56 cfs 499 cf Outflow=0.64 cfs 1,744 cf

Pond SMP1: StormTech Peak Elev=307.10' Storage=2,253 cf Inflow=2.39 cfs 6,067 cf
Outflow=0.18 cfs 6,065 cf

Pond SMP2: Infiltration Basin Peak Elev=305.97' Storage=662 cf Inflow=0.83 cfs 1,516 cf
Discarded=0.14 cfs 1,435 cf Primary=0.00 cfs 0 cf Outflow=0.14 cfs 1,435 cf

Link AP-1: AP-1 Inflow=0.20 cfs 533 cf
Primary=0.20 cfs 533 cf

Link AP-2: AP-2 Inflow=0.00 cfs 0 cf
Primary=0.00 cfs 0 cf

Total Runoff Area = 31,844 sf Runoff Volume = 9,361 cf Average Runoff Depth = 3.53"
44.53% Pervious = 14,181 sf 55.47% Impervious = 17,663 sf

Summary for Subcatchment P1: Subcat P1

Runoff = 0.20 cfs @ 11.97 hrs, Volume= 533 cf, Depth> 2.71"

Runoff by SCS TR-20 method, UH=SCS, Weighted-Q, Time Span= 0.00-24.00 hrs, dt= 0.05 hrs
Type II 24-hr 100 Year Rainfall=6.20"

Area (sf)	CN	Description
1,403	39	>75% Grass cover, Good, HSG A
954	98	Paved parking, HSG A
2,357		Weighted Average
1,403		59.52% Pervious Area
954		40.48% Impervious Area

Tc (min)	Length (feet)	Slope (ft/ft)	Velocity (ft/sec)	Capacity (cfs)	Description
6.0					**Direct Entry,**

Summary for Subcatchment P2: Subcat P2

Runoff = 0.69 cfs @ 11.96 hrs, Volume= 1,744 cf, Depth> 5.14"

Runoff by SCS TR-20 method, UH=SCS, Weighted-Q, Time Span= 0.00-24.00 hrs, dt= 0.05 hrs
Type II 24-hr 100 Year Rainfall=6.20"

Area (sf)	CN	Description
614	39	>75% Grass cover, Good, HSG A
3,462	98	Paved parking, HSG A
4,076		Weighted Average
614		15.06% Pervious Area
3,462		84.94% Impervious Area

Tc (min)	Length (feet)	Slope (ft/ft)	Velocity (ft/sec)	Capacity (cfs)	Description
6.0					**Direct Entry,**

Summary for Subcatchment P2.1: Subcat P2.1

Runoff = 0.24 cfs @ 12.03 hrs, Volume= 828 cf, Depth> 1.41"

Runoff by SCS TR-20 method, UH=SCS, Weighted-Q, Time Span= 0.00-24.00 hrs, dt= 0.05 hrs
Type II 24-hr 100 Year Rainfall=6.20"

Area (sf)	CN	Description
5,851	39	>75% Grass cover, Good, HSG A
1,177	98	Paved parking, HSG A
7,028		Weighted Average
5,851		83.25% Pervious Area
1,177		16.75% Impervious Area

Tc (min)	Length (feet)	Slope (ft/ft)	Velocity (ft/sec)	Capacity (cfs)	Description
9.9	100	0.0250	0.17		**Sheet Flow,** Grass: Short n= 0.150 P2= 2.60"
0.4	60	0.0250	2.37		**Shallow Concentrated Flow,** Grassed Waterway Kv= 15.0 fps
10.3	160	Total			

Summary for Subcatchment P3: Subcat P3

Runoff = 0.05 cfs @ 12.01 hrs, Volume= 189 cf, Depth> 0.56"

Runoff by SCS TR-20 method, UH=SCS, Weighted-Q, Time Span= 0.00-24.00 hrs, dt= 0.05 hrs
Type II 24-hr 100 Year Rainfall=6.20"

Area (sf)	CN	Description
4,004	39	>75% Grass cover, Good, HSG A
43	98	Paved parking, HSG A
4,048		Weighted Average
4,004		98.93% Pervious Area
43		1.07% Impervious Area

Tc (min)	Length (feet)	Slope (ft/ft)	Velocity (ft/sec)	Capacity (cfs)	Description
6.0					**Direct Entry,**

Summary for Subcatchment P4: Subcat P4

Runoff = 1.21 cfs @ 11.96 hrs, Volume= 3,050 cf, Depth> 5.95"

Runoff by SCS TR-20 method, UH=SCS, Weighted-Q, Time Span= 0.00-24.00 hrs, dt= 0.05 hrs
Type II 24-hr 100 Year Rainfall=6.20"

Area (sf)	CN	Description
3	39	>75% Grass cover, Good, HSG A
6,144	98	Paved parking, HSG A
6,146		Weighted Average
3		0.04% Pervious Area
6,144		99.96% Impervious Area

Tc (min)	Length (feet)	Slope (ft/ft)	Velocity (ft/sec)	Capacity (cfs)	Description
6.0					**Direct Entry,**

Summary for Subcatchment P5: Subcat P5

Runoff = 1.17 cfs @ 11.96 hrs, Volume= 3,017 cf, Depth> 4.42"

Runoff by SCS TR-20 method, UH=SCS, Weighted-Q, Time Span= 0.00-24.00 hrs, dt= 0.05 hrs
Type II 24-hr 100 Year Rainfall=6.20"

Area (sf)	CN	Description
2,306	39	>75% Grass cover, Good, HSG A
5,883	98	Paved parking, HSG A
8,189		Weighted Average
2,306		28.16% Pervious Area
5,883		71.84% Impervious Area

Tc (min)	Length (feet)	Slope (ft/ft)	Velocity (ft/sec)	Capacity (cfs)	Description
6.0					**Direct Entry,**

Summary for Pond SMP-2: Gravel Drip Strip

Inflow Area = 4,076 sf, 84.94% Impervious, Inflow Depth > 5.14" for 100 Year event
Inflow = 0.69 cfs @ 11.96 hrs, Volume= 1,744 cf
Outflow = 0.64 cfs @ 11.99 hrs, Volume= 1,744 cf, Atten= 7%, Lag= 1.9 min
Discarded = 0.08 cfs @ 11.65 hrs, Volume= 1,246 cf
Primary = 0.56 cfs @ 11.99 hrs, Volume= 499 cf

Routing by Stor-Ind method, Time Span= 0.00-24.00 hrs, dt= 0.05 hrs
Peak Elev= 309.95' @ 11.99 hrs Surf.Area= 350 sf Storage= 118 cf

Plug-Flow detention time= 2.3 min calculated for 1,744 cf (100% of inflow)
Center-of-Mass det. time= 2.2 min (745.3 - 743.1)

Volume	Invert	Avail.Storage	Storage Description
#1	309.10'	196 cf	**Custom Stage Data (Prismatic)**Listed below (Recalc) 490 cf Overall x 40.0% Voids
#2	309.10'	84 cf	**Custom Stage Data (Prismatic)**Listed below (Recalc) 210 cf Overall x 40.0% Voids
		280 cf	Total Available Storage

Elevation (feet)	Surf.Area (sq-ft)	Inc.Store (cubic-feet)	Cum.Store (cubic-feet)
309.10	245	0	0
311.10	245	490	490

Elevation (feet)	Surf.Area (sq-ft)	Inc.Store (cubic-feet)	Cum.Store (cubic-feet)
309.10	105	0	0
311.10	105	210	210

Device	Routing	Invert	Outlet Devices
#1	Discarded	309.10'	**10.000 in/hr Exfiltration over Surface area**
#2	Primary	309.35'	**6.0" Round Culvert** L= 43.0' Ke= 0.500 Inlet / Outlet Invert= 309.35' / 306.00' S= 0.0779 '/' Cc= 0.900 n= 0.013 Corrugated PE, smooth interior, Flow Area= 0.20 sf

Discarded OutFlow Max=0.08 cfs @ 11.65 hrs HW=309.15' (Free Discharge)
└**1=Exfiltration** (Exfiltration Controls 0.08 cfs)

Primary OutFlow Max=0.55 cfs @ 11.99 hrs HW=309.94' (Free Discharge)
└**2=Culvert** (Inlet Controls 0.55 cfs @ 2.80 fps)

Summary for Pond SMP1: StormTech

Inflow Area = 14,335 sf, 83.89% Impervious, Inflow Depth > 5.08" for 100 Year event
Inflow = 2.39 cfs @ 11.96 hrs, Volume= 6,067 cf
Outflow = 0.18 cfs @ 12.53 hrs, Volume= 6,065 cf, Atten= 92%, Lag= 33.9 min
Discarded = 0.18 cfs @ 12.53 hrs, Volume= 6,065 cf

Routing by Stor-Ind method, Time Span= 0.00-24.00 hrs, dt= 0.05 hrs
Peak Elev= 307.10' @ 12.53 hrs Surf.Area= 1,307 sf Storage= 2,253 cf

Plug-Flow detention time= 86.2 min calculated for 6,065 cf (100% of inflow)
Center-of-Mass det. time= 86.0 min (829.3 - 743.3)

Volume	Invert	Avail.Storage	Storage Description
#1A	304.00'	1,165 cf	**20.50'W x 52.28'L x 3.50'H Field A Z=0.5** 4,211 cf Overall - 1,298 cf Embedded = 2,913 cf x 40.0% Voids
#2A	304.50'	1,298 cf	**StormTech SC-740** x 28 Inside #1 Effective Size= 44.6"W x 30.0"H => 6.45 sf x 7.12'L = 45.9 cf Overall Size= 51.0"W x 30.0"H x 7.56'L with 0.44' Overlap Row Length Adjustment= +0.44' x 6.45 sf x 4 rows
		2,463 cf	Total Available Storage

Storage Group A created with Chamber Wizard

Device	Routing	Invert	Outlet Devices
#1	Discarded	304.00'	**6.000 in/hr Exfiltration over Surface area**

Discarded OutFlow Max=0.18 cfs @ 12.53 hrs HW=307.10' (Free Discharge)
└**1=Exfiltration** (Exfiltration Controls 0.18 cfs)

Summary for Pond SMP2: Infiltration Basin

Inflow Area = 15,151 sf, 30.90% Impervious, Inflow Depth > 1.20" for 100 Year event
Inflow = 0.83 cfs @ 12.00 hrs, Volume= 1,516 cf
Outflow = 0.14 cfs @ 12.21 hrs, Volume= 1,435 cf, Atten= 83%, Lag= 12.6 min
Discarded = 0.14 cfs @ 12.21 hrs, Volume= 1,435 cf
Primary = 0.00 cfs @ 0.00 hrs, Volume= 0 cf

Routing by Stor-Ind method, Time Span= 0.00-24.00 hrs, dt= 0.05 hrs / 3
Peak Elev= 305.97' @ 12.21 hrs Surf.Area= 623 sf Storage= 662 cf

Plug-Flow detention time= 71.1 min calculated for 1,435 cf (95% of inflow)
Center-of-Mass det. time= 40.0 min (832.5 - 792.5)

Volume	Invert	Avail.Storage	Storage Description
#1	299.50'	31 cf	**6.00'D x 4.50'H Vertical Cone/Cylinder** 127 cf Overall - 50 cf Embedded = 77 cf x 40.0% Voids
#2	300.00'	50 cf	**4.00'D x 4.00'H Vertical Cone/Cylinder** Inside #1
#3	304.00'	958 cf	**Custom Stage Data (Irregular)** Listed below (Recalc)
		1,039 cf	Total Available Storage

Elevation (feet)	Surf.Area (sq-ft)	Perim. (feet)	Inc.Store (cubic-feet)	Cum.Store (cubic-feet)	Wet.Area (sq-ft)
304.00	65	45.0	0	0	65
305.00	285	95.0	162	162	626
306.00	605	115.0	435	597	977
306.50	845	130.0	361	958	1,276

Device	Routing	Invert	Outlet Devices
#1	Discarded	299.50'	**10.000 in/hr Exfiltration over Horizontal area**
#2	Primary	306.00'	**30.0' long x 5.0' breadth Broad-Crested Rectangular Weir** Head (feet) 0.20 0.40 0.60 0.80 1.00 1.20 1.40 1.60 1.80 2.00 2.50 3.00 3.50 4.00 4.50 5.00 5.50 Coef. (English) 2.34 2.50 2.70 2.68 2.68 2.66 2.65 2.65 2.65 2.65 2.67 2.66 2.68 2.70 2.74 2.79 2.88

Discarded OutFlow Max=0.14 cfs @ 12.21 hrs HW=305.97' (Free Discharge)
└**1=Exfiltration** (Exfiltration Controls 0.14 cfs)

Primary OutFlow Max=0.00 cfs @ 0.00 hrs HW=299.50' (Free Discharge)
└**2=Broad-Crested Rectangular Weir** (Controls 0.00 cfs)

Summary for Link AP-1: AP-1

Inflow Area = 2,357 sf, 40.48% Impervious, Inflow Depth > 2.71" for 100 Year event
Inflow = 0.20 cfs @ 11.97 hrs, Volume= 533 cf
Primary = 0.20 cfs @ 11.97 hrs, Volume= 533 cf, Atten= 0%, Lag= 0.0 min

Primary outflow = Inflow, Time Span= 0.00-24.00 hrs, dt= 0.05 hrs

Summary for Link AP-2: AP-2

Inflow Area = 15,151 sf, 30.90% Impervious, Inflow Depth = 0.00" for 100 Year event
Inflow = 0.00 cfs @ 0.00 hrs, Volume= 0 cf
Primary = 0.00 cfs @ 0.00 hrs, Volume= 0 cf, Atten= 0%, Lag= 0.0 min

Primary outflow = Inflow, Time Span= 0.00-24.00 hrs, dt= 0.05 hrs

HYDROCAD CALCULATIONS
POST DEVELOPMENT

FROZEN CONDITIONS

Summary for Pond 1P: Frozen Infiltration Basin

Inflow Area = 15,151 sf, 30.90% Impervious, Inflow Depth > 2.16" for 100 Year event
Inflow = 0.91 cfs @ 12.01 hrs, Volume= 2,721 cf
Outflow = 0.89 cfs @ 12.01 hrs, Volume= 2,030 cf, Atten= 2%, Lag= 0.4 min
Discarded = 0.00 cfs @ 0.00 hrs, Volume= 0 cf
Primary = 0.89 cfs @ 12.01 hrs, Volume= 2,030 cf

Routing by Stor-Ind method, Time Span= 0.00-24.00 hrs, dt= 0.05 hrs / 3
Peak Elev= 306.05' @ 12.01 hrs Surf.Area= 654 sf Storage= 708 cf

Plug-Flow detention time= 173.5 min calculated for 2,026 cf (74% of inflow)
Center-of-Mass det. time= 72.7 min (858.3 - 785.6)

Volume	Invert	Avail.Storage	Storage Description
#1	299.50'	31 cf	**6.00'D x 4.50'H Vertical Cone/Cylinder** 127 cf Overall - 50 cf Embedded = 77 cf x 40.0% Voids
#2	300.00'	50 cf	**4.00'D x 4.00'H Vertical Cone/Cylinder** Inside #1
#3	304.00'	958 cf	**Custom Stage Data (Irregular)** Listed below (Recalc)
		1,039 cf	Total Available Storage

Elevation (feet)	Surf.Area (sq-ft)	Perim. (feet)	Inc.Store (cubic-feet)	Cum.Store (cubic-feet)	Wet.Area (sq-ft)
304.00	65	45.0	0	0	65
305.00	285	95.0	162	162	626
306.00	605	115.0	435	597	977
306.50	845	130.0	361	958	1,276

Device	Routing	Invert	Outlet Devices
#1	Primary	306.00'	**30.0' long x 5.0' breadth Broad-Crested Rectangular Weir** Head (feet) 0.20 0.40 0.60 0.80 1.00 1.20 1.40 1.60 1.80 2.00 2.50 3.00 3.50 4.00 4.50 5.00 5.50 Coef. (English) 2.34 2.50 2.70 2.68 2.68 2.66 2.65 2.65 2.65 2.65 2.67 2.66 2.68 2.70 2.74 2.79 2.88
#2	Discarded	299.50'	**10.000 in/hr Exfiltration over Surface area from 299.50' - 300.00'** Excluded Surface area = 28 sf

Discarded OutFlow Max=0.00 cfs @ 0.00 hrs HW=299.50' (Free Discharge)
↑—**2=Exfiltration** (Controls 0.00 cfs)

Primary OutFlow Max=0.71 cfs @ 12.01 hrs HW=306.05' (Free Discharge)
↑—**1=Broad-Crested Rectangular Weir** (Weir Controls 0.71 cfs @ 0.51 fps)

Summary for Pond 2P: Frozen Gravel Drip Strip

Inflow Area = 4,076 sf, 84.94% Impervious, Inflow Depth > 5.14" for 100 Year event
Inflow = 0.69 cfs @ 11.96 hrs, Volume= 1,744 cf
Outflow = 0.63 cfs @ 12.00 hrs, Volume= 1,703 cf, Atten= 9%, Lag= 2.1 min
Primary = 0.63 cfs @ 12.00 hrs, Volume= 1,703 cf

Routing by Stor-Ind method, Time Span= 0.00-24.00 hrs, dt= 0.05 hrs

Peak Elev= 310.04' @ 12.00 hrs Surf.Area= 350 sf Storage= 132 cf

Plug-Flow detention time= 32.0 min calculated for 1,703 cf (98% of inflow)
Center-of-Mass det. time= 16.8 min (759.9 - 743.1)

Volume	Invert	Avail.Storage	Storage Description
#1	309.10'	196 cf	**Custom Stage Data (Prismatic)**Listed below (Recalc) 490 cf Overall x 40.0% Voids
#2	309.10'	84 cf	**Custom Stage Data (Prismatic)**Listed below (Recalc) 210 cf Overall x 40.0% Voids
		280 cf	Total Available Storage

Elevation (feet)	Surf.Area (sq-ft)	Inc.Store (cubic-feet)	Cum.Store (cubic-feet)
309.10	245	0	0
311.10	245	490	490

Elevation (feet)	Surf.Area (sq-ft)	Inc.Store (cubic-feet)	Cum.Store (cubic-feet)
309.10	105	0	0
311.10	105	210	210

Device	Routing	Invert	Outlet Devices
#1	Primary	309.35'	**6.0" Round Culvert** L= 43.0' Ke= 0.500 Inlet / Outlet Invert= 309.35' / 306.00' S= 0.0779 '/' Cc= 0.900 n= 0.013 Corrugated PE, smooth interior, Flow Area= 0.20 sf

Primary OutFlow Max=0.62 cfs @ 12.00 hrs HW=310.04' (Free Discharge)
1=Culvert (Inlet Controls 0.62 cfs @ 3.18 fps)

Stormwater Practice Sizing

Job Name and # 246 West Avenue Apartments

Water Quality Volume Calculation
6/23/2016
WQv = [(P)(Rv)(A)]/12

Where:
Rv = 0.05 + 0.009(I)
I = impervious cover in percent
P = 90% rainfall (see Figure 4.1 in NYS Stormwater Management Design Manual)
A = Area in acres

SMP-1: Underground Infiltration Chambers

% Impervious	83.89%		
Rv	0.81		
90% Rainfall	1.15		
Area in Square Feet	14335		
WQv Required =	**1106**	ft^3	**0.025** ac-ft

SMP-2: Infiltration Basin/Trench

% Impervious	30.90%		
Rv	0.33		
90% Rainfall	1.15		
Area in Square Feet	15151		
WQv Required =	**476**	ft^3	**0.011** ac-ft

Job Name and # 246 West Avenue Apartments

Minimum Runoff Reduction Volume

6/23/2016

RRv = [(P)(Rv*)(Ai)]/12

Where:

Ai = (S)(Aic)

Rv = 0.05 + 0.009(I) where I is 100% impervious

Ai = impervious cover targeted for runoff reduction

Aic = Total area of new impervious cover

P = 90% rainfall (see Figure 4.1 in NYS Stormwater Management Design Manual)

S = Hydrologic Soil Group (HSG) Specific Reduction Factor (S)

A=0.55, B=0.40, C=0.30, D=0.20

S (HSG A)	0.55	
Aic	0.34	acres
Rv	0.95	
90% Rainfall	1.15	
Ai	0.187	

RRv = **0.017** acre feet = 742 ft^3

Appendix B

Soil Survey and Map Set

United States Department of Agriculture

NRCS

Natural Resources Conservation Service

A product of the National Cooperative Soil Survey, a joint effort of the United States Department of Agriculture and other Federal agencies, State agencies including the Agricultural Experiment Stations, and local participants

Custom Soil Resource Report for Saratoga County, New York

June 17, 2016

Preface

Soil surveys contain information that affects land use planning in survey areas. They highlight soil limitations that affect various land uses and provide information about the properties of the soils in the survey areas. Soil surveys are designed for many different users, including farmers, ranchers, foresters, agronomists, urban planners, community officials, engineers, developers, builders, and home buyers. Also, conservationists, teachers, students, and specialists in recreation, waste disposal, and pollution control can use the surveys to help them understand, protect, or enhance the environment.

Various land use regulations of Federal, State, and local governments may impose special restrictions on land use or land treatment. Soil surveys identify soil properties that are used in making various land use or land treatment decisions. The information is intended to help the land users identify and reduce the effects of soil limitations on various land uses. The landowner or user is responsible for identifying and complying with existing laws and regulations.

Although soil survey information can be used for general farm, local, and wider area planning, onsite investigation is needed to supplement this information in some cases. Examples include soil quality assessments (http://www.nrcs.usda.gov/wps/portal/nrcs/main/soils/health/) and certain conservation and engineering applications. For more detailed information, contact your local USDA Service Center (http://offices.sc.egov.usda.gov/locator/app?agency=nrcs) or your NRCS State Soil Scientist (http://www.nrcs.usda.gov/wps/portal/nrcs/detail/soils/contactus/?cid=nrcs142p2_053951).

Great differences in soil properties can occur within short distances. Some soils are seasonally wet or subject to flooding. Some are too unstable to be used as a foundation for buildings or roads. Clayey or wet soils are poorly suited to use as septic tank absorption fields. A high water table makes a soil poorly suited to basements or underground installations.

The National Cooperative Soil Survey is a joint effort of the United States Department of Agriculture and other Federal agencies, State agencies including the Agricultural Experiment Stations, and local agencies. The Natural Resources Conservation Service (NRCS) has leadership for the Federal part of the National Cooperative Soil Survey.

Information about soils is updated periodically. Updated information is available through the NRCS Web Soil Survey, the site for official soil survey information.

The U.S. Department of Agriculture (USDA) prohibits discrimination in all its programs and activities on the basis of race, color, national origin, age, disability, and where applicable, sex, marital status, familial status, parental status, religion, sexual orientation, genetic information, political beliefs, reprisal, or because all or a part of an individual's income is derived from any public assistance program. (Not all prohibited bases apply to all programs.) Persons with disabilities who require alternative means

for communication of program information (Braille, large print, audiotape, etc.) should contact USDA's TARGET Center at (202) 720-2600 (voice and TDD). To file a complaint of discrimination, write to USDA, Director, Office of Civil Rights, 1400 Independence Avenue, S.W., Washington, D.C. 20250-9410 or call (800) 795-3272 (voice) or (202) 720-6382 (TDD). USDA is an equal opportunity provider and employer.

Contents

Preface.....2
Soil Map.....5
Soil Map.....6
Legend.....7
Map Unit Legend.....8
Map Unit Descriptions.....8
Saratoga County, New York.....10
DeA—Deerfield loamy fine sand, nearly level.....10
WnB—Windsor loamy sand, 3 to 8 percent slopes.....11

Soil Map

The soil map section includes the soil map for the defined area of interest, a list of soil map units on the map and extent of each map unit, and cartographic symbols displayed on the map. Also presented are various metadata about data used to produce the map, and a description of each soil map unit.

Custom Soil Resource Report
Soil Map

Map Scale: 1:1,000 if printed on A landscape (11" x 8.5") sheet.

N

Meters
0 10 20 40 60

Feet
0 45 90 180 270

Map projection: Web Mercator Corner coordinates: WGS84 Edge tics: UTM Zone 18N WGS84

MAP LEGEND

Area of Interest (AOI)
- Area of Interest (AOI)

Soils
- Soil Map Unit Polygons
- Soil Map Unit Lines
- Soil Map Unit Points

Special Point Features
- Blowout
- Borrow Pit
- Clay Spot
- Closed Depression
- Gravel Pit
- Gravelly Spot
- Landfill
- Lava Flow
- Marsh or swamp
- Mine or Quarry
- Miscellaneous Water
- Perennial Water
- Rock Outcrop
- Saline Spot
- Sandy Spot
- Severely Eroded Spot
- Sinkhole
- Slide or Slip
- Sodic Spot
- Spoil Area
- Stony Spot
- Very Stony Spot
- Wet Spot
- Other
- Special Line Features

Water Features
- Streams and Canals

Transportation
- Rails
- Interstate Highways
- US Routes
- Major Roads
- Local Roads

Background
- Aerial Photography

MAP INFORMATION

The soil surveys that comprise your AOI were mapped at 1:24,000.

Warning: Soil Map may not be valid at this scale.

Enlargement of maps beyond the scale of mapping can cause misunderstanding of the detail of mapping and accuracy of soil line placement. The maps do not show the small areas of contrasting soils that could have been shown at a more detailed scale.

Please rely on the bar scale on each map sheet for map measurements.

Source of Map: Natural Resources Conservation Service
Web Soil Survey URL: http://websoilsurvey.nrcs.usda.gov
Coordinate System: Web Mercator (EPSG:3857)

Maps from the Web Soil Survey are based on the Web Mercator projection, which preserves direction and shape but distorts distance and area. A projection that preserves area, such as the Albers equal-area conic projection, should be used if more accurate calculations of distance or area are required.

This product is generated from the USDA-NRCS certified data as of the version date(s) listed below.

Soil Survey Area: Saratoga County, New York
Survey Area Data: Version 15, Sep 24, 2015

Soil map units are labeled (as space allows) for map scales 1:50,000 or larger.

Date(s) aerial images were photographed: Jun 19, 2010—Oct 11, 2010

The orthophoto or other base map on which the soil lines were compiled and digitized probably differs from the background imagery displayed on these maps. As a result, some minor shifting of map unit boundaries may be evident.

Map Unit Legend

Saratoga County, New York (NY091)			
Map Unit Symbol	**Map Unit Name**	**Acres in AOI**	**Percent of AOI**
DeA	Deerfield loamy fine sand, nearly level	1.1	30.1%
WnB	Windsor loamy sand, 3 to 8 percent slopes	2.4	69.9%
Totals for Area of Interest		**3.5**	**100.0%**

Map Unit Descriptions

The map units delineated on the detailed soil maps in a soil survey represent the soils or miscellaneous areas in the survey area. The map unit descriptions, along with the maps, can be used to determine the composition and properties of a unit.

A map unit delineation on a soil map represents an area dominated by one or more major kinds of soil or miscellaneous areas. A map unit is identified and named according to the taxonomic classification of the dominant soils. Within a taxonomic class there are precisely defined limits for the properties of the soils. On the landscape, however, the soils are natural phenomena, and they have the characteristic variability of all natural phenomena. Thus, the range of some observed properties may extend beyond the limits defined for a taxonomic class. Areas of soils of a single taxonomic class rarely, if ever, can be mapped without including areas of other taxonomic classes. Consequently, every map unit is made up of the soils or miscellaneous areas for which it is named and some minor components that belong to taxonomic classes other than those of the major soils.

Most minor soils have properties similar to those of the dominant soil or soils in the map unit, and thus they do not affect use and management. These are called noncontrasting, or similar, components. They may or may not be mentioned in a particular map unit description. Other minor components, however, have properties and behavioral characteristics divergent enough to affect use or to require different management. These are called contrasting, or dissimilar, components. They generally are in small areas and could not be mapped separately because of the scale used. Some small areas of strongly contrasting soils or miscellaneous areas are identified by a special symbol on the maps. If included in the database for a given area, the contrasting minor components are identified in the map unit descriptions along with some characteristics of each. A few areas of minor components may not have been observed, and consequently they are not mentioned in the descriptions, especially where the pattern was so complex that it was impractical to make enough observations to identify all the soils and miscellaneous areas on the landscape.

The presence of minor components in a map unit in no way diminishes the usefulness or accuracy of the data. The objective of mapping is not to delineate pure taxonomic classes but rather to separate the landscape into landforms or landform segments that have similar use and management requirements. The delineation of such segments on the map provides sufficient information for the development of resource plans. If

intensive use of small areas is planned, however, onsite investigation is needed to define and locate the soils and miscellaneous areas.

An identifying symbol precedes the map unit name in the map unit descriptions. Each description includes general facts about the unit and gives important soil properties and qualities.

Soils that have profiles that are almost alike make up a *soil series*. Except for differences in texture of the surface layer, all the soils of a series have major horizons that are similar in composition, thickness, and arrangement.

Soils of one series can differ in texture of the surface layer, slope, stoniness, salinity, degree of erosion, and other characteristics that affect their use. On the basis of such differences, a soil series is divided into *soil phases*. Most of the areas shown on the detailed soil maps are phases of soil series. The name of a soil phase commonly indicates a feature that affects use or management. For example, Alpha silt loam, 0 to 2 percent slopes, is a phase of the Alpha series.

Some map units are made up of two or more major soils or miscellaneous areas. These map units are complexes, associations, or undifferentiated groups.

A *complex* consists of two or more soils or miscellaneous areas in such an intricate pattern or in such small areas that they cannot be shown separately on the maps. The pattern and proportion of the soils or miscellaneous areas are somewhat similar in all areas. Alpha-Beta complex, 0 to 6 percent slopes, is an example.

An *association* is made up of two or more geographically associated soils or miscellaneous areas that are shown as one unit on the maps. Because of present or anticipated uses of the map units in the survey area, it was not considered practical or necessary to map the soils or miscellaneous areas separately. The pattern and relative proportion of the soils or miscellaneous areas are somewhat similar. Alpha-Beta association, 0 to 2 percent slopes, is an example.

An *undifferentiated group* is made up of two or more soils or miscellaneous areas that could be mapped individually but are mapped as one unit because similar interpretations can be made for use and management. The pattern and proportion of the soils or miscellaneous areas in a mapped area are not uniform. An area can be made up of only one of the major soils or miscellaneous areas, or it can be made up of all of them. Alpha and Beta soils, 0 to 2 percent slopes, is an example.

Some surveys include *miscellaneous areas*. Such areas have little or no soil material and support little or no vegetation. Rock outcrop is an example.

Saratoga County, New York

DeA—Deerfield loamy fine sand, nearly level

Map Unit Setting

National map unit symbol: 9w9t
Elevation: 0 to 1,000 feet
Mean annual precipitation: 36 to 48 inches
Mean annual air temperature: 45 to 48 degrees F
Frost-free period: 125 to 160 days
Farmland classification: Farmland of statewide importance

Map Unit Composition

Deerfield and similar soils: 75 percent
Minor components: 25 percent
Estimates are based on observations, descriptions, and transects of the mapunit.

Description of Deerfield

Setting

Landform: Deltas, outwash plains, terraces
Landform position (two-dimensional): Summit
Landform position (three-dimensional): Tread
Down-slope shape: Concave
Across-slope shape: Convex
Parent material: Sandy glaciofluvial or deltaic deposits derived mainly from granite, gneiss, or sandstone

Typical profile

H1 - 0 to 10 inches: loamy fine sand
H2 - 10 to 26 inches: loamy fine sand
H3 - 26 to 72 inches: fine sand

Properties and qualities

Slope: 0 to 3 percent
Depth to restrictive feature: More than 80 inches
Natural drainage class: Moderately well drained
Capacity of the most limiting layer to transmit water (Ksat): High to very high (1.98 to 19.98 in/hr)
Depth to water table: About 18 to 36 inches
Frequency of flooding: None
Frequency of ponding: None
Available water storage in profile: Low (about 3.8 inches)

Interpretive groups

Land capability classification (irrigated): None specified
Land capability classification (nonirrigated): 3w
Hydrologic Soil Group: A

Minor Components

Oakville

Percent of map unit: 10 percent

Claverack

Percent of map unit: 7 percent

Wareham
Percent of map unit: 4 percent

Wareham
Percent of map unit: 4 percent

WnB—Windsor loamy sand, 3 to 8 percent slopes

Map Unit Setting

National map unit symbol: 2svkf
Elevation: 0 to 1,210 feet
Mean annual precipitation: 36 to 71 inches
Mean annual air temperature: 39 to 55 degrees F
Frost-free period: 140 to 240 days
Farmland classification: Farmland of statewide importance

Map Unit Composition

Windsor, loamy sand, and similar soils: 85 percent
Minor components: 15 percent
Estimates are based on observations, descriptions, and transects of the mapunit.

Description of Windsor, Loamy Sand

Setting

Landform: Deltas, dunes, outwash plains, outwash terraces
Landform position (three-dimensional): Riser, tread
Down-slope shape: Linear, convex
Across-slope shape: Linear, convex
Parent material: Loose sandy glaciofluvial deposits derived from granite and/or loose sandy glaciofluvial deposits derived from schist and/or loose sandy glaciofluvial deposits derived from gneiss

Typical profile

O - 0 to 1 inches: moderately decomposed plant material
A - 1 to 3 inches: loamy sand
Bw - 3 to 25 inches: loamy sand
C - 25 to 65 inches: sand

Properties and qualities

Slope: 3 to 8 percent
Depth to restrictive feature: More than 80 inches
Natural drainage class: Excessively drained
Runoff class: Low
Capacity of the most limiting layer to transmit water (Ksat): Moderately high to very high (1.42 to 99.90 in/hr)
Depth to water table: More than 80 inches
Frequency of flooding: None
Frequency of ponding: None
Salinity, maximum in profile: Nonsaline to very slightly saline (0.0 to 2.0 mmhos/cm)
Available water storage in profile: Low (about 4.5 inches)

Interpretive groups

Land capability classification (irrigated): None specified
Land capability classification (nonirrigated): 2s
Hydrologic Soil Group: A

Minor Components

Hinckley, loamy sand

Percent of map unit: 10 percent
Landform: Deltas, eskers, kames, outwash plains
Landform position (two-dimensional): Summit, shoulder, backslope
Landform position (three-dimensional): Head slope, nose slope, side slope, crest, rise
Down-slope shape: Convex
Across-slope shape: Convex, linear

Deerfield, loamy sand

Percent of map unit: 5 percent
Landform: Deltas, outwash plains, terraces
Landform position (two-dimensional): Footslope
Landform position (three-dimensional): Tread, talf
Down-slope shape: Linear
Across-slope shape: Linear

Appendix C

SWPPP Inspection Form

246 West Ave. Apartments
WEEKLY SWPPP INSPECTION REPORT

Inspector Name:	Date:
Signature (required):	Time:
Weather:	Inspection #:
Soil Conditions (dry, saturated, etc):	

Note: Digital photos, with date stamp required for all practices requiring corrective action, before and after, to be attached to the inspection report.

	YES	NO	N/A		
1.	☐	☐	☐	Routine Inspection.	Date of last inspection:_____
2.	☐	☐	☐	Inspection following rain event.	Date/time of storm ending:_____ Rainfall amount:_____ Recorded by:_____
3.	☐	☐	☐	Is this a final site inspection?	
4.	☐	☐	☐	Has site undergone final stabilization?	
	☐	☐	☐	If so, have all temporary erosion and sediment controls been removed?	

Site Disturbance (Indicate Locations on Plan)

	YES	NO	N/A	
1.	☐	☐	☐	Areas previously disturbed, but have not undergone active site work in the last 14 days?
2.	☐	☐	☐	Areas disturbed within last 14 days?
3.	☐	☐	☐	Areas expected to be disturbed in next 14 days?
4.	☐	☐	☐	Do areas of steep slopes or complex stabilization issues exist? If "YES" explain:
5.	☐	☐	☐	Are there currently more than 5 acres of disturbed soil at the site? If so make sure there is an approval letter from NYS DEC.

Additional Comments:_____

Inspection of Erosion and Sediment Control Devices

	Type of Control Device	Accumulation (if any) in %	Repairs/Maintenance Needed
1.			
2.			
3.			
4.			
5.			
6.			

Stabilization/Runoff

	YES	NO	N/A	
1.	☐	☐	☐	Are all existing disturbed areas contained by control devices? Type of devices:
2.	☐	☐	☐	Are there areas that require stabilization within the next 14 days? Specify Area:
3.	☐	☐	☐	Have stabilization measures been initiated in inactive areas?
4.	☐	☐	☐	Is there current snow cover or frozen ground conditions?
5.	☐	☐	☐	Rills or gullies?
6.	☐	☐	☐	Slumping/deposition?
7.	☐	☐	☐	Loss of vegetation?
8.	☐	☐	☐	Lack of germination?
9.	☐	☐	☐	Loss of mulching?

Receiving Structures/Water Bodies (Indicate locations where runoff leaves the project site on the site plan)

	YES	NO	N/A	
1.	☐	☐	☐	Surface water swale or natural surface waterbody?

If natural waterbody:

Is waterbody located ☐ onsite, or ☐ adjacent to property boundary?

Description of condition:_____

2.	☐	☐	☐	Municipal or community system?

Inspect locations where runoff from project site enters the receiving waters and indicate if there is evidence of:

a.	☐	☐	☐	Rills or gullies?
b.	☐	☐	☐	Slumping/deposition?
c.	☐	☐	☐	Loss of vegetation?
d.	☐	☐	☐	Undermining of structures?
e.	☐	☐	☐	Was there a discharge into the receiving water on the day of inspection?
f.	☐	☐	☐	Is there evidence of turbidity, sedimentation, or oil in the receiving waters?

Additional Comments:_____

Inspection of Post-Construction Stormwater Management Control Devices

	Type of Control Device	Phase of Construction	Repairs/Maintenance Needed
1.			
2.			
3.			
4.			

General Site Condition

	YES	NO	N/A	
1.	☐	☐	☐	Have action items from previous reports been addressed?
2.	☐	☐	☐	Does routine maintenance of protection components occur on a regular basis?
3.	☐	☐	☐	Does cleaning and/or sweeping affected roadways occur, at minimum, daily?
4.	☐	☐	☐	Is debris and litter removed on a monthly basis, or as necessary?
5.	☐	☐	☐	Is the site maintained in an orderly manner?

Describe the condition of all natural waterbodies within or adjacent to the project that receive runoff from the site:

Contractors progress over last 7 days:_____

Anticipated work to be begun in the next 7 days:_____

Additional Comments:_____

Visual Observations

	YES	NO	N/A	
1.	☐	☐	☐	All erosion and sediment control measures have been installed/constructed?
2.	☐	☐	☐	All erosion and sediment control measures are being maintained properly?

SUMMARY OF ACTION ITEMS TO REPAIR/REPLACE/MAINTAIN/CORRECT DEFICIENCIES

Action Reported To (no signature required): _____

Company: _____

Appendix D

Other SWPPP Forms

Construction Sequence
SWPPP Plan Changes
Spill Response Form
Stormwater Management Practice Maintenance Log

The operator shall prepare a summary of construction status using the Construction Sequence Form below once every month. Significant deviations to the sequence and reasons for those deviations (i.e. weather, subcontractor availability, etc.), shall be noted by the contractor. The schedule shall be used to record the dates for initiation of construction, implementation of erosion control measures, stabilization, etc. A copy of this table will be maintained at the construction site and updated in addition to the individual Inspection Reports completed for each inspection.

Construction Sequence Form

Construction Activities (Identify name of planned practices)	Date Complete
1.	
2.	
3.	
4.	
5.	
6.	
7.	
8.	
9.	
10.	
11.	
12.	

STORM WATER POLLUTION PREVENTION PLAN
PLAN CHANGES, AUTHORIZATION, AND CHANGE CERTIFICATION

CHANGES REQUIRED TO THE POLLUTION PREVENTION PLAN:

_____
_____
_____
_____
_____

REASONS FOR CHANGES:

_____
_____
_____
_____
_____

REQUESTED BY: _____

DATE: _____

AUTHORIZED BY: _____

DATE: _____

CERTIFICATION OF CHANGES:

I certify under penalty of law that this document and all attachments were prepared under my direction or supervision in accordance with a system designed to assure that qualified personnel properly gathered and evaluated the information submitted. Based on my inquiry of the person or persons who manage the system, or those persons directly responsible for gathering the information, the information submitted is, to the best of my knowledge and belief, true, accurate, and complete. I am aware that false statements made herein are punishable as a Class A misdemeanor pursuant to Section 210.45 of the penal code.

SIGNATURE: _____

DATE: _____

SPILL RESPONSE REPORT

Within 1 hour of a spill discovery less than 2 gallons in volume the following must be notified:

John Luke Hodorowski, John-Paul Builders, LLC
(518)356-1435

Within 1 hour of a spill discovery greater than 2 gallons the following must be notified:

John Luke Hodorowski
NYSDEC Spill Response Hotline 1-800-457-7362
Spill Response Contractor

Material Spilled: _____

_____

_____

_____

Approximate Volume: _____

Location: _____

_____

_____

Distance to nearest down gradient drainage: _____

_____

Distance to nearest down gradient open water: _____

_____

Temporary control measures in place: _____

_____

_____

_____

_____

_____

Cost Estimate for Letter of Credit				PB #
Project No:	**201178**			
Project:	**246 West Ave**			
Location:	**246 West Avenue**			
	Saratoga Springs, New York			
Date:	**6/23/2016**			
ON-SITE WORK				
Item	**Quantity**	**Unit**	**Unit Cost**	**Subtotal**
Site Preparation and Grading				
Erosion Control (including silt fence & construction acc	1	LS	$2,000.00	$2,000.00
Remove Bituminous Asphalt Pament	110	SY	$3.00	$330.00
Tree Removal and grubbing	1	LS	$2,000.00	$2,000.00
Rough Grading	1	LS	$1,500.00	$1,500.00
Pump station removal	1	LS	$500.00	$500.00
Hardscape				
Porous Pavement and base	5,360	SF	$4.50	$24,120.00
Concrete Walk	460	SF	$5.25	$2,415.00
Cast in Place Concrete Curb	206	LF	$18.00	$3,708.00
Site Amenities				
Parking lot light pole	2	EA	$2,200.00	$4,400.00
Traffic signs	1	LS	$3,500.00	$3,500.00
Striping	1	LS	$1,000.00	$1,000.00
Site Utilities				
Catch Basins/ Drain Inlets	3	EA	$1,200.00	$3,600.00
Clean Outs	3	EA	$1,200.00	$3,600.00
Storm Drywell	1	EA	$2,300.00	$2,300.00
Stormtech infiltrator basin	1	LS	$9,000.00	$9,000.00
6" HDPE Roof Leader	74	LF	$12.00	$888.00
8" HDPE Storm Line - perf	166	LF	$20.00	$3,320.00
12" HDPE Storm Line	100	LF	$20.00	$2,000.00
8" PVC Storm line	39	LF	$22.00	$858.00
6" PVC Sanitary Line	52	LF	$20.00	$1,040.00
2" DIP Waterline	45	LF	$12.00	$540.00
6" DIP Water Line	12	LF	$28.00	$336.00
Nyloplast yard drain	5	EA	$600.00	$3,000.00
Landscaping				
Deciduous Trees	1	EA	$700.00	$700.00
Evergreen Trees	30	EA	$350.00	$10,500.00
Shrubs	25	EA	$220.00	$5,500.00
On-Site Total				**$92,655.00**
On-Site Total X .25				**$23,163.75**
OFF-SITE WORK				
Concrete Sidewalk	800	SF	$5.25	$4,200.00
Cast in Place Concrete Curb	130	LF	$18.00	$2,340.00
Bike Rack	1	EA	$600.00	$600.00

Interprative signage	1	EA	$350.00	$350.00
Concrete Pavers	171	SF	$8.00	$1,368.00
6" PVC Sanitary line	43	LF	$20.00	$860.00
8" PVC Sanitary Line	56	LF	$22.00	$1,232.00
8" PVC Storm Line	37	LF	$22.00	$814.00
12"x6" Sleeve / valve	1	EA	$3,200.00	$3,200.00
12" Ductile Iron Pipe (Water)	585	LF	$100.00	$58,500.00
12" Gate Valve components	1	EA	$750.00	$750.00
12" DIP termination and cap on new waterline	1	EA	$200.00	$200.00
Fire Hydrant and Valve Assembly	2	EA	$4,500.00	$9,000.00
6" DIP Waterline	48	LF	$28.00	$1,344.00
Sanitary Manholes	1	EA	$3,500.00	$3,500.00
Decorative Street Lights	1	EA	$3,000.00	$3,000.00
Deciduous Trees	10	EA	$700.00	$7,000.00
Connection to SAN MH @ West Ave w/ drop	1	LS	$3,000.00	$3,000.00
Connection to existing 12" DIP line on West	1	EA	$500.00	$500.00
As Built Drawings	1	LS	$3,500.00	$3,500.00
Off-Site Total				**$105,258.00**
Total Site Work				**$197,913.00**
Letter of Credit Amounts				
Total off-site work				$105,258.00
Total on-site work x .25				$23,163.75
Total				**$128,421.75**
L.O.C. amount				**$128,500.00**

City of Saratoga Springs
OFFICE OF PUBLIC WORKS
5 Lake Avenue
Saratoga Springs, New York 12866

Phone 518-587-3550 ** Fax 518-587-2417
www.saratoga-springs.org

ANTHONY J. SCIROCCO
COMMISSIONER

TIMOTHY J. COGAN
DEPUTY COMMISSIONER

NEW WATER SERVICE CONNECTION AGREEMENT & APPLICATION FORM

Property Owner's Name: John-Paul Builders, LLC

Project Name (if applicable): 246 West Ave Apartments

Property Address: 246 West Ave

Tax Map#: 178.33-1-20 & 21

Size of Tap (check one below):
☐ ¾" ☐ 1" ☐ Greater than 1": _____

RESIDENTIAL
Minimum fee is $3,000 for the 1st dwelling and $2,000 for each additional dwelling

Number of Dwellings: 16

Appraised Value: _____
If $120,000 or less please provide copy of certified appraisal

NON-RESIDENTIAL
Minimum fee is $3,000 for the 1st unit of water and $2,000 for each additional unit of water. A unit of water is 14,000 cubic feet of water per year.

Estimated Cubic Feet of Water per Year: _____

Permit Fee: 33,000

To be paid in full without any contingencies or protest, on or before the Building Inspector approves the rough plumbing, including the installation of the water meter, or at the time of the issuance of a tapping permit.

The undersigned acknowledges the fees as estimated above and outlined in the City of Saratoga Springs Water Ordinance and Resolution, section 12, printed on the reverse side of this document.

The undersigned represents to the City that they have full and complete authority to execute this document and find and commit the developer to pay fee(s) as required by the City Water Ordinance. This agreement shall be binding on all of the undersigned transferees.

The undersigned acknowledges that a copy of this document will be delivered to all appropriate and necessary governmental entities, and the undersigned further acknowledges that it shall pay as provided herein.

Authorized Signature: _____ Company Name: John-Paul Builders, LLC
Company Address: 796 Burdeck Street, Schenectady, NY 12306
Phone Number: 518-356-1435 Date: 06-23-2016

Department of Public Works Approval: _____ Date: _____

Rev Account – WATCON

12. …

There shall also be a service connection fee with the following provisions:

A. Any new service connections (3/4 inch and 1 inch taps) to the City's water system shall be a minimum of $3,000.00 (three thousand dollars) per unit. Unless waived, the service connection fee must be paid in full on or before the Building Inspector approves the rough plumbing, including the installation of the water meter, or at the time of the issuance of a tapping permit.

B. Any new service connection for either:

1. Non-residential use (greater than a 1 inch tap) shall be estimated to use more than one (1) unit of water per year shall be charged a minimum service connection fee of three thousand dollars ($3,000) for the first unit of water and ***two thousand dollars ($2000)*** for each additional unit of water or part thereof; or
2. Residential use where more than one residential dwelling per parcel is served by a single service connection shall be charged a minimum service connection fee of three thousand dollars ($3,000) for the first dwelling and ***two thousand dollars ($2,000)*** for each additional dwelling unit.

C. A unit of water shall be defined as fourteen thousand (14,000) cubic feet of water per year.

D. Any project that improves the City's water distribution system at the sole cost of a developer, the cost of the improvement by the developer will be deducted from the cost of the service connection fee. If the cost of the improvement is greater than the cost of the service connection, then no service connection fee will be charged. To be considered for eligibility, the diameter of the watermain installed must be 12" or greater.

E. Exemptions to these new service connection fees will be all properties within Water's Edge at Saratoga Lake Planned Unit Development District not to exceed 304 units (amended June 6, 1998), Phase I and II of the Meadowbrook subdivision and existing homes in the Knoll Spring Park water district. Also, credit for 69 taps will be credited to Interlaken Phase "B" (Regatta View). The exemptions for these projects will be granted due to the fact that the cost to extend the infrastructure of the City to these projects was not borne by the City and are of greater cost than the service connection fee. Also exempt shall be all connections made to that portion of the Doten Avenue and East Broadway water line financed by federal funds because federal regulations prohibit the imposition of a service connection fee. Also exempt shall be the pre-existing homes defined in the Gilbert Road/Meadowbrook Road Special Assessment District.

F. Taps that are to be used solely for sprinkler system and fire protection will not be affected.

G. 1.) A Low Income House shall be defined as any new residential house and lot whose agreed to selling price is $120,000 or less or any existing residential house and lot whose appraised value is $120,000 or less. Proof of price or value has to be provided by documents from the lending institution or a certified appraiser.

2.) All dwellings meeting the above stated requirements shall be considered Low Income Housing and subject to a service connection fee of $500 (five hundred dollars) per house. All other conditions remain the same. Low Income Housing price will be determined on an annual basis by increasing rate of Consumer Price Index for this region.

3.) If a Low Income House is sold within five (5) years of the installation of a new service connection at a price that is greater than the definition of a Low Income House at that time, the seller will be responsible to pay the City the full cost of a service connection fee.

H. Anyone constructing a house on speculation will be charged the full service connection fee that is applicable at the time. When proof of price is submitted, a rebate will be issued if warranted, to be determined by the Commissioner of Public Works.

I. All monies raised by the new service connection fees are to be maintained in a dedicated fund for capital improvements under the control of the Commissioner of Public Works. The monies are not to be used for maintenance, or the reduction of water rates.

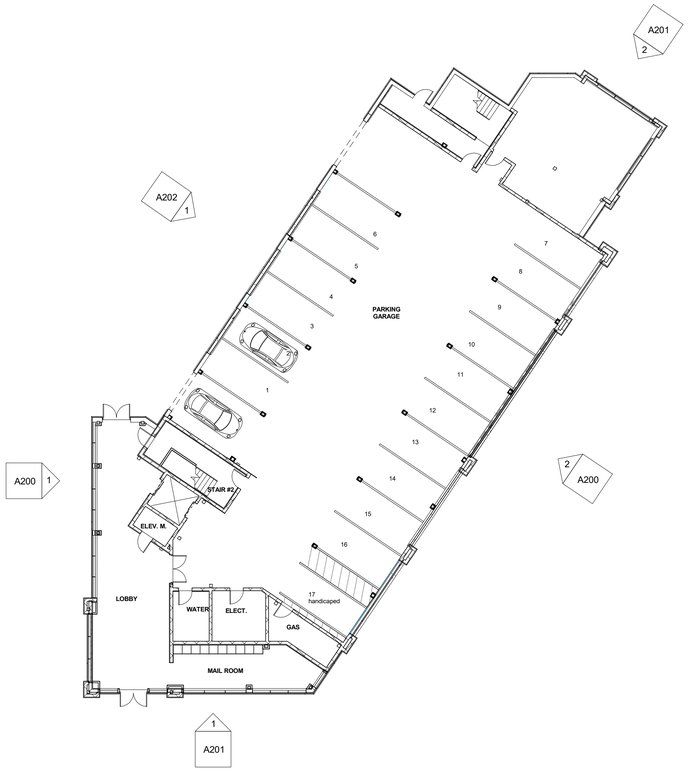

1 Level 1 (GROUND LEVEL PARKING)
1/16" = 1'-0"

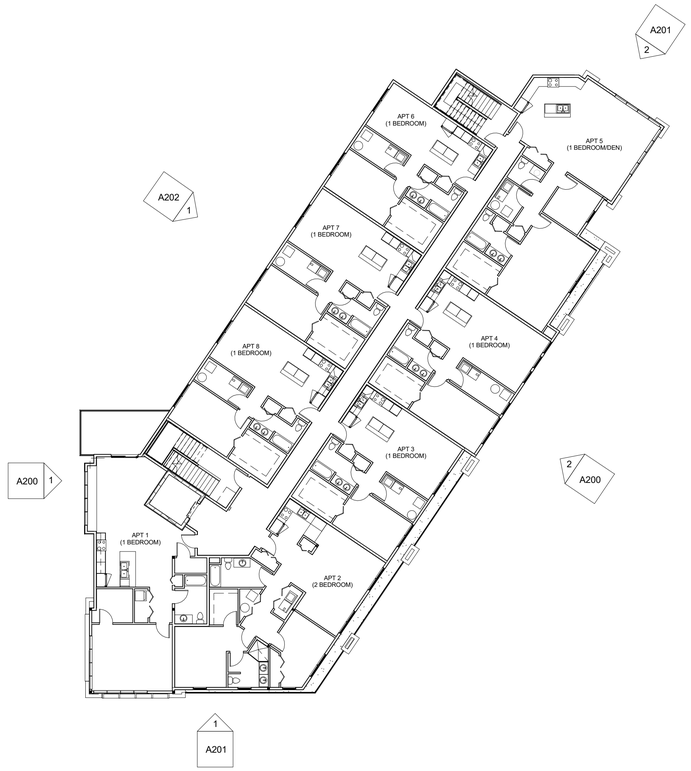

2 LEVEL 2
1/16" = 1'-0"

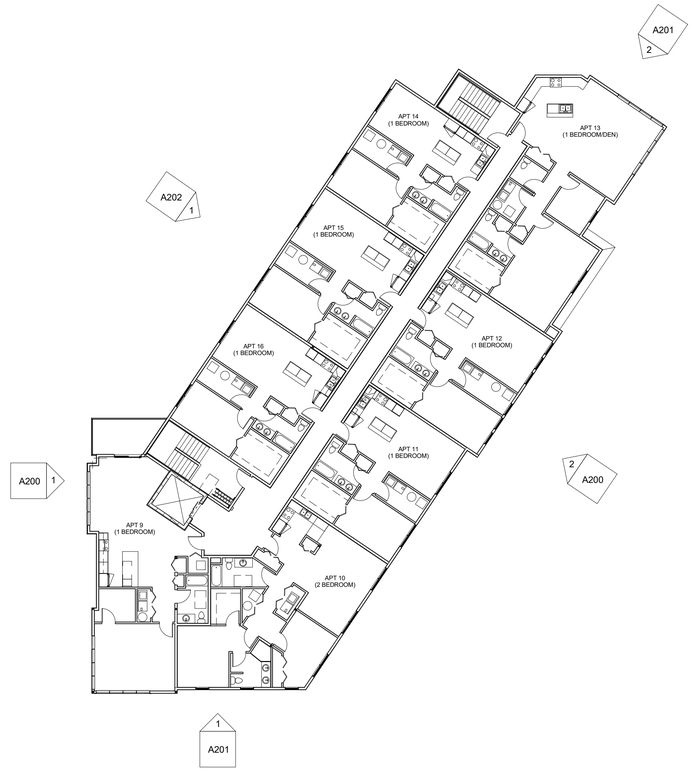

3 LEVEL 3
1/16" = 1'-0"

6/22/16

RE4ORM ARCHITECTURE
323 CLINTON STREET
SCHENECTADY, NY 12305
P:518.399.4174
F:518.399.4105
WWW.RE4ORMARCHITECTURE.COM

246 WEST AVE APARTMENTS

246 WEST AVE
SARATOGA SPRINGS, NY

FLOOR PLANS

A100

CONTRACTOR SHALL VERIFY ALL DIMENSION AT SITE. UNAUTHORIZED ALTERATIONS OR
ADDITIONS TO THIS DOCUMENT IS A VIOLATION OF THE NEW YORK STATE EDUCATION LAW.

1 NORTH ELEVATION
1/8" = 1'-0"

ELEVATION NOTES	
LABEL	ELEVATION NOTE
E01	"SMARTSIDE" ENGINEERED WOOD LAP SIDING FACTORY FINISHED COLOR TBD
E02	
E03	"SMARTSIDE" ENGINEERED WOOD TRIM FASCIA BOARDS & VENTED SOFFIT FACTORY FINISHED COLOR TBD
E04	"SMARTSIDE" ENGINEERED WOOD TRIM CORNER BOARDS FACTORY FINISHED COLOR TBD
E05	CULTURED STONE SILL
E06	CULTURED STONE VENEER TBD
E07	DECORATIVE HEAVY TIMBER BRACKETS, PAINTED COLOR TBD
E08	"SMARTSIDE" ENGINEERED WOOD SHAKE SIDING FACTORY FINISHED COLOR TBD
E09	COLUMNS WRAPED WITH "SMARTSIDE" ENGINEERED WOOD TRIM BORADS FACTORY FINISHED COLOR TBD
E10	FYPON OR EQUAL DECORATIVE ROUND LOUVER & TRIM
E11	DECORATIVE TRUSS & TRIM PAINTED COLOR TBD
E12	CULTURED STONE VENEER PIER WITH CONCRETE CAP
E13	STANDING SEAM METAL ROOF, COLOR TBD
E14	"MIRATEC" AND "EXTIRA" COMPOSITE BOARDS (PANEL & TRIMS) PAINTED, COLOR TBD
E15	"SMARTSIDE" ENGINEERED WOOD TRIM BOARDS FACTORY FINISHED COLOR TBD
E16	CUPOLA (CONTRACTORS OPTION TO BUILD IN PLACE OR INSTALL PREMENUACTURED UNIT)
E17	CABLE PIPE RAIL WITH PAINTED POSTS COLOR TBD
E18	ROOF CANOPY WITH ASPHALT SHINGLES AND "SMARTSIDE" FASCIA BOARDS & SOFFITS

2 SOUTH (BIKE PATH) ELEVATION
1/8" = 1'-0"

6/22/16

RE4ORM ARCHITECTURE
323 CLINTON STREET
SCHENECTADY, NY 12305
P:518.399.4174
F:518.399.4105
WWW.RE4ORMARCHITECTURE.COM

246 WEST AVE APARTMENTS

246 WEST AVE
SARATOGA SPRINGS, NY

EXTERIOR ELEVATIONS

A200

CONTRACTOR SHALL VERIFY ALL DIMENSION AT SITE. UNAUTHORIZED ALTERATIONS OR ADDITIONS TO THIS DOCUMENT IS A VIOLATION OF THE NEW YORK STATE EDUCATION LAW.

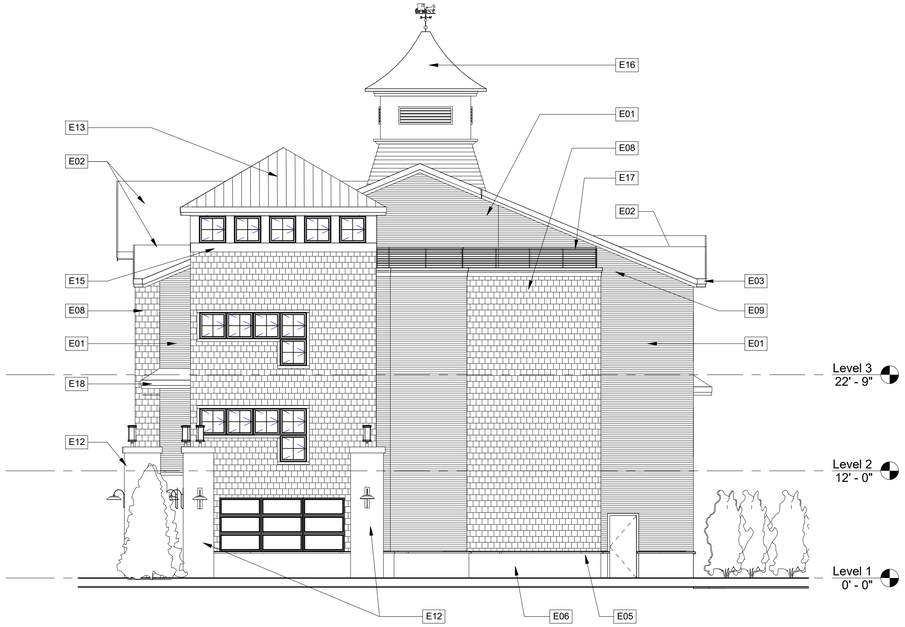

2 EAST ELEVATION
1/8" = 1'-0"

1 WEST ELEVATION
1/8" = 1'-0"

ELEVATION NOTES	
LABEL	ELEVATION NOTE
E01	"SMARTSIDE" ENGINEERED WOOD LAP SIDING FACTORY FINISHED COLOR TBD
E02	
E03	"SMARTSIDE" ENGINEERED WOOD TRIM FASCIA BOARDS & VENTED SOFFIT FACTORY FINISHED COLOR TBD
E04	"SMARTSIDE" ENGINEERED WOOD TRIM CORNER BOARDS FACTORY FINISHED COLOR TBD
E05	CULTURED STONE SILL
E06	CULTURED STONE VENEER TBD
E07	DECORATIVE HEAVY TIMBER BRACKETS, PAINTED COLOR TBD
E08	"SMARTSIDE" ENGINEERED WOOD SHAKE SIDING FACTORY FINISHED COLOR TBD
E09	COLUMNS WRAPED WITH "SMARTSIDE" ENGINEERED WOOD TRIM BORADS FACTORY FINISHED COLOR TBD
E10	FYPON OR EQUAL DECORATIVE ROUND LOUVER & TRIM
E11	DECORATIVE TRUSS & TRIM PAINTED COLOR TBD
E12	CULTURED STONE VENEER PIER WITH CONCRETE CAP
E13	STANDING SEAM METAL ROOF, COLOR TBD
E14	"MIRATEC" AND "EXTIRA" COMPOSITE BOARDS (PANEL & TRIMS) PAINTED, COLOR TBD
E15	"SMARTSIDE" ENGINEERED WOOD TRIM BOARDS FACTORY FINISHED COLOR TBD
E16	CUPOLA (CONTRACTORS OPTION TO BUILD IN PLACE OR INSTALL PREMENUACTURED UNIT)
E17	CABLE PIPE RAIL WITH PAINTED POSTS COLOR TBD
E18	ROOF CANOPY WITH ASPHALT SHINGLES AND "SMARTSIDE" FASCIA BOARDS & SOFFITS

6/22/16

RE4ORM ARCHITECTURE
323 CLINTON STREET
SCHENECTADY, NY 12305
P:518.399.4174
F:518.399.4105
WWW.RE4ORMARCHITECTURE.COM

246 WEST AVE APARTMENTS

246 WEST AVE
SARATOGA SPRINGS, NY

EXTERIOR ELEVATIONS

A201

CONTRACTOR SHALL VERIFY ALL DIMENSION AT SITE. UNAUTHORIZED ALTERATIONS OR ADDITIONS TO THIS DOCUMENT IS A VIOLATION OF THE NEW YORK STATE EDUCATION LAW.

ELEVATION NOTES	
LABEL	ELEVATION NOTE

E01	"SMARTSIDE" ENGINEERED WOOD LAP SIDING FACTORY FINISHED COLOR TBD
E02	
E03	"SMARTSIDE" ENGINEERED WOOD TRIM FASCIA BOARDS & VENTED SOFFIT FACTORY FINISHED COLOR TBD
E04	"SMARTSIDE" ENGINEERED WOOD TRIM CORNER BOARDS FACTORY FINISHED COLOR TBD
E05	CULTURED STONE SILL
E06	CULTURED STONE VENEER TBD
E07	DECORATIVE HEAVY TIMBER BRACKETS, PAINTED COLOR TBD
E08	"SMARTSIDE" ENGINEERED WOOD SHAKE SIDING FACTORY FINISHED COLOR TBD
E09	COLUMNS WRAPED WITH "SMARTSIDE" ENGINEERED WOOD TRIM BORADS FACTORY FINISHED COLOR TBD
E10	FYPON OR EQUAL DECORATIVE ROUND LOUVER & TRIM
E11	DECORATIVE TRUSS & TRIM PAINTED COLOR TBD
E12	CULTURED STONE VENEER PIER WITH CONCRETE CAP
E13	STANDING SEAM METAL ROOF, COLOR TBD
E14	"MIRATEC" AND "EXTIRA" COMPOSITE BOARDS (PANEL & TRIMS) PAINTED, COLOR TBD
E15	"SMARTSIDE" ENGINEERED WOOD TRIM BOARDS FACTORY FINISHED COLOR TBD
E16	CUPOLA (CONTRACTORS OPTION TO BUILD IN PLACE OR INSTALL PREMENUACTURED UNIT)
E17	CABLE PIPE RAIL WITH PAINTED POSTS COLOR TBD
E18	ROOF CANOPY WITH ASPHALT SHINGLES AND "SMARTSIDE" FASCIA BOARDS & SOFFITS

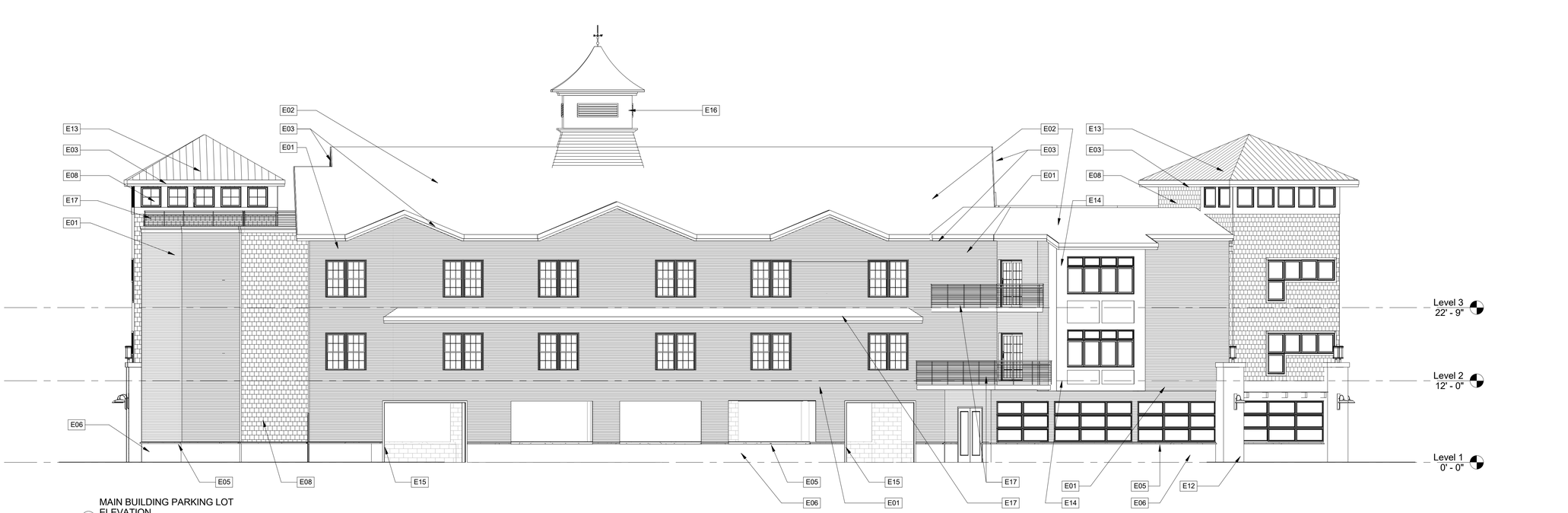

1 MAIN BUILDING PARKING LOT ELEVATION
1/8" = 1'-0"

6/22/16

RE4ORM ARCHITECTURE
323 CLINTON STREET
SCHENECTADY, NY 12305
P:518.399.4174
F:518.399.4105
WWW.RE4ORMARCHITECTURE.COM

246 WEST AVE APARTMENTS

246 WEST AVE
SARATOGA SPRINGS, NY

EXTERIOR ELEVATION

A202

CONTRACTOR SHALL VERIFY ALL DIMENSION AT SITE. UNAUTHORIZED ALTERATIONS OR ADDITIONS TO THIS DOCUMENT IS A VIOLATION OF THE NEW YORK STATE EDUCATION LAW.

Site Plan
246 West Avenue Apartments

City of Saratoga Springs, New York

City PB#

June 23, 2016

Vicinity Map:

SCALE: NTS

CITY OF SARATOGA SPRINGS
STANDARD NOTES

1. All work must conform to all Federal, State and City Codes, specifications, ordinances, rules and regulations.
2. The elevation base for the contours and benchmarks are based on the National Geodetic Vertical Datum, 1929.
3. All refuse, debris and miscellaneous items to be removed shall be legally disposed of off-site by the Contractor to a location approved by the City Engineer.
4. The Contractor must set up a pre-construction meeting with the City Engineer prior to any construction. Construction inspections by the a designated representative of design professional are required. The cost of the construction inspection is the responsibility of the Applicant/Developer.
5. The contractor must obtain a blasting permit from the Building Inspector if any blasting is required for the project.
6. The contractor must obtain a street opening permit issued by the Department of Public Works for any work in the street or right-of-way of any City street, road or alley.
7. All points of construction ingress or egress shall be maintained to prevent tracking or flowing of sediment or debris onto a public road.
8. No Certificate of Occupancy will be issued until all site work has been completed in accordance with the approved plans; and an as-built drawing has been prepared in accordance with the requirements of the City Engineer.
9. The applicant must verify that the proposed project can accommodate the turning movements of any fire truck that the fire department so designates.

Approval

Approved under authority of a resolution adopted _____
by the Planning Board of the City of Saratoga Springs.

_____ Chairperson

Date Signed _____

SITE STATISTICS

PROPOSED USE:	16 Apartments	
TAX MAP PARCEL NUMBER	178.33-1-20&21	
LEASE LOT SIZE	.51 ACRES	
EXISTING ZONING	T-4 Urban Neighborhood	
BUILDING SETBACKS	REQUIRED	PROPOSED
BUILD-TO-LINE	12'-18'	12.5'
FRONTAGE BUILDOUT	50%MIN.	63%
SIDE SETBACK	12' AVERAGE PRINCIPAL BLDG	15.5'
	6' MIN OUTBUILDING	8.02'
REAR SETBACK	24' PRINCIPAL BLDG	27.07'
	5' MIN OUTBUILDING	9.34'
BUILDING HEIGHT	2 STORY MIN, 40' MAX HT.	3 STORY, 40'-0"
PARKING REQUIREMENTS		
RESIDENCES WITHIN T-4 ZONE		
1.5 PER DWELLING UNIT	24 SPACES	24 SPACES 7 SPACES OUTSIDE BUILDINGS 17 SPACES WITHIN THE BUILDINGS

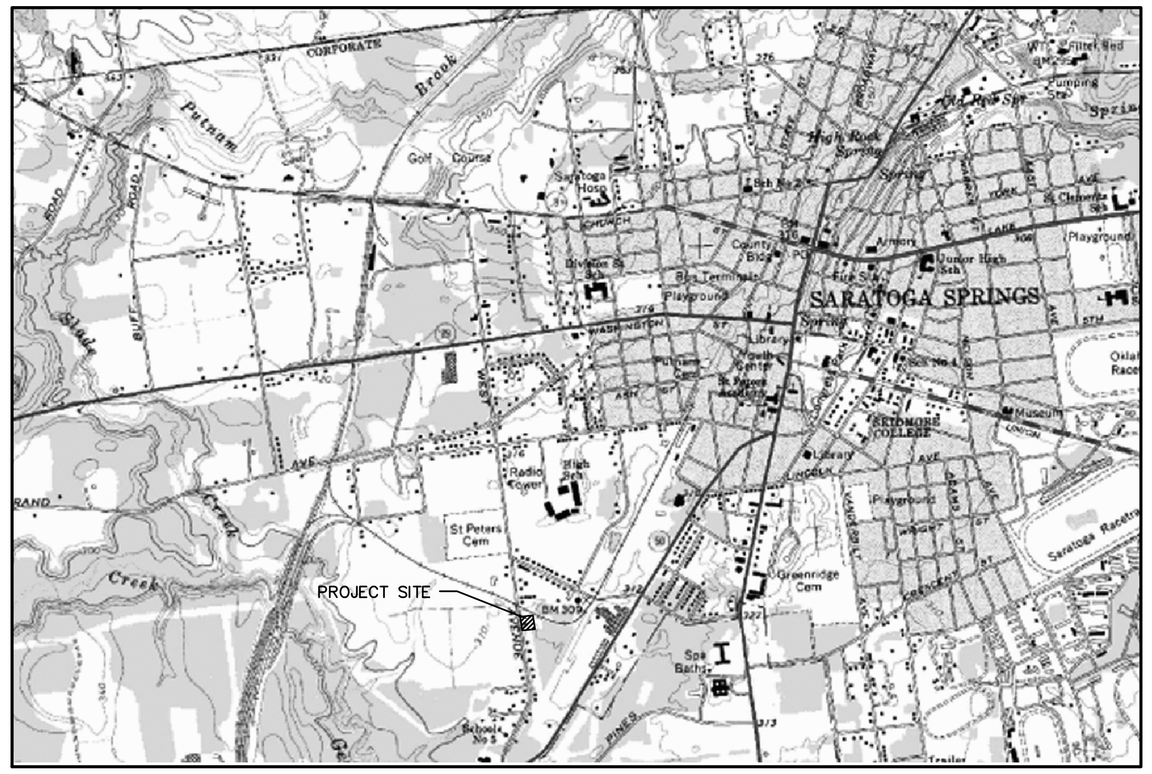

Project Location Map:

SCALE: NTS

SHEET INDEX:

	COVER SHEET
	BOUNDARY AND TOPOGRAPHIC SURVEY
L-1	SITE DEMOLITION AND PREPARATION PLAN
L-2	SITE LAYOUT AND MATERIALS PLAN
L-3	SITE GRADING AND DRAINAGE PLAN
L-4	SITE UTILITY PLAN
L-4.1	OFF-SITE WATERLINE CONNECTION
L-5	SITE LANDSCAPE PLAN
L-6	SITE LIGHTING PLAN
L-7	SITE DETAILS
L-8	SITE DETAILS
L-9	SITE DETAILS
L-10	SITE DETAILS
L-11	STORMWATER DETAILS
L-12	SITE DETAILS

Applicant:

John-Paul Builders, LLC
796 Burdeck Street
Schenectady, NY 12306

Prepared By:

the LA group
Landscape Architecture
and Engineering, P.C.

40 Long Alley
Saratoga Springs
New York 12866
518/587-8100
Telefax 518/587-0180

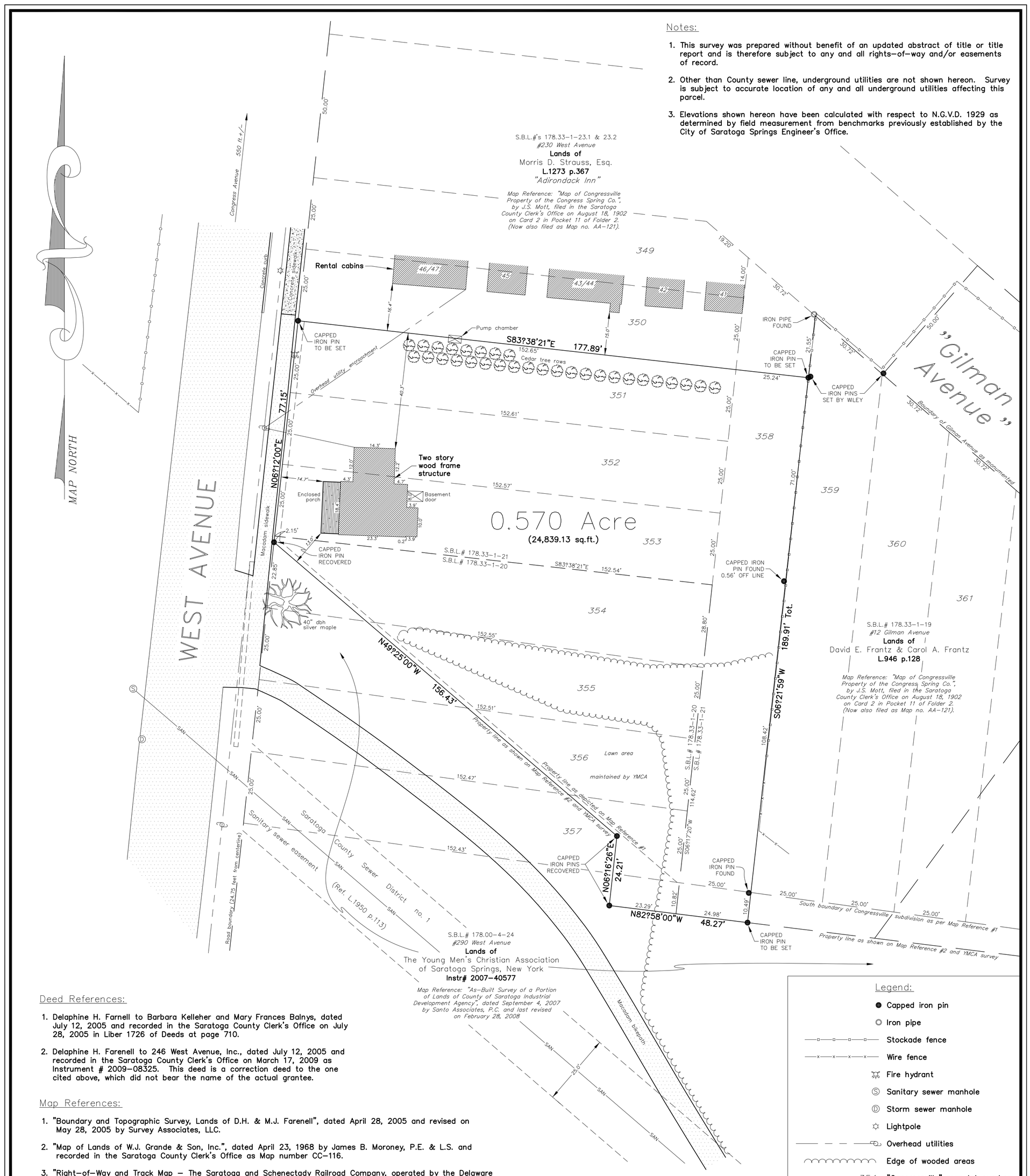

Notes:

1. This survey was prepared without benefit of an updated abstract of title or title report and is therefore subject to any and all rights-of-way and/or easements of record.
2. Other than County sewer line, underground utilities are not shown hereon. Survey is subject to accurate location of any and all underground utilities affecting this parcel.
3. Elevations shown hereon have been calculated with respect to N.G.V.D. 1929 as determined by field measurement from benchmarks previously established by the City of Saratoga Springs Engineer's Office.

Deed References:

1. Delaphine H. Farnell to Barbara Kelleher and Mary Frances Balnys, dated July 12, 2005 and recorded in the Saratoga County Clerk's Office on July 28, 2005 in Liber 1726 of Deeds at page 710.
2. Delaphine H. Farenell to 246 West Avenue, Inc., dated July 12, 2005 and recorded in the Saratoga County Clerk's Office on March 17, 2009 as Instrument # 2009-08325. This deed is a correction deed to the one cited above, which did not bear the name of the actual grantee.

Map References:

1. "Boundary and Topographic Survey, Lands of D.H. & M.J. Farenell", dated April 28, 2005 and revised on May 28, 2005 by Survey Associates, LLC.
2. "Map of Lands of W.J. Grande & Son, Inc.", dated April 23, 1968 by James B. Moroney, P.E. & L.S. and recorded in the Saratoga County Clerk's Office as Map number CC-116.
3. "Right-of-Way and Track Map - The Saratoga and Schenectady Railroad Company, operated by the Delaware & Hudson Company, Saratoga Division - Main Line - Ballston Spa to Saratoga Springs, Station 1951+85.5 to Station 2005+90", dated June 30, 1916 and filed in the offices of C.P. Rail.
4. Map no. 37, Parcel no. 44 for the Grade Crossing Eliminations of the Railroad operated by the Delaware & Hudson Railroad Corporation through the City of Saratoga Springs and the Towns of Greenfield and Wilton", dated August 5, 1957 and filed in the Saratoga County Clerk's Office. Notice of appropriation was recorded in Liber 658 of Deeds at page 169.

Legend:

- Capped iron pin
- Iron pipe
- Stockade fence
- Wire fence
- Fire hydrant
- Sanitary sewer manhole
- Storm sewer manhole
- Lightpole
- Overhead utilities
- Edge of wooded areas
- 354 "Congressville" map lot number

PREPARED FOR:
THE PIKE COMPANY
210 CLIFTON CORPORATE PARKWAY
CLIFTON PARK, N.Y. 12065

REV.	DATE	BY	CHK.	DESCRIPTION
2	06/29/12	DRP	ACS	PROPERTY LINES REVISED
1	10/31/11	AJS	ACS	PROPOSED BOUNDARY LINE AGREEMENT
0	09/30/11	SRS	ACS	ORIGINAL SURVEY DATE

Certifications indicated hereon signify that this survey was prepared in accordance with the existing Code of Practice of Land Surveys adopted by the N.Y. State Association of Professional Land Surveyors. Said certifications shall run only to the title insurance company, governmental agency, and lending institution listed hereon and to the assignees of the lending institution. Certifications are not transferable to additional institutions or subsequent owners.

Unauthorized alteration or addition to a survey map bearing a licensed land surveyor's seal is a violation of Section 7209, Subdivision 2 of the N.Y. State Education Law. Only copies from the original of this survey marked with an original of the land surveyor's embossed seal shall be considered to be valid copies.

In addition, only copies from the original of this survey marked with an original of the land surveyor's signature in RED shall be considered to be valid copies.

SANTO ASSOCIATES
LAND SURVEYING AND ENGINEERING, P.C.
1 BARNEY ROAD • SUITE 109
CLIFTON PARK, NY 12065
PHONE: (518) 383-8001 • FAX: (518) 383-6026

(C) 2011 Santo Associates P.C. "All Rights Reserved"
"Unauthorized Duplication is a Violation of Applicable Laws."

ANDREW C. SCHAUFFERT, L.S. LICENSE NO. 049901

SURVEY MAP OF LANDS OF

246 WEST AVENUE, INC.

AT 246 WEST AVENUE, SARATOGA SPRINGS, N.Y. 12866

DRAWN BY: SRS	CITY OF: SARATOGA SPRINGS	SCALE: 1" = 20'
CHECKED BY: ACS	COUNTY OF: SARATOGA	DWG. NO.: 7277
DATE: 09/30/11	STATE OF: NEW YORK	REV.: 2

LANDS OF
DAVID E. FRANTZ & CAROL A.
FRANTZ

Rental cabins

41

42

43/44

45

46/47

Cedar tree rows

EXISTING CEDAR HEDGE TO BE RELOCATED COORDINATE LOCATION WITH OWNER OF "ADIRONDACK INN", CONTRACTOR TO GUARANTEE THE TRANSPLANTED TREES FOR ONE YEAR. REPLACEMENT TREES IF NEEDED WILL BE ARBORVITAE 8'–10' HT.

Pump chamber

PUMP CHAMBER TO BE REMOVED COORDINATE LOCATION AND REMOVAL WITH OWNER OF "ADIRONDACK INN"

LANDS OF
MORRIS D. STRAUSS, ESQ.
"ADIRONDACK INN"

Two story wood frame structure

Basement door

Enclosed porch

Overhead utility

B1

B2

B3

B4

B5

SILT FENCE (TYP.)

DISEASED TREE TO BE REMOVED

6" dbl silver maple

LANDS OF
THE YOUNG MEN'S CHRISTIAN
ASSOCIATION
OF SARATOGA SPRINGS

Saratoga County Sewer District no. 1

Sanitary sewer easement (Ref. L.1950

Concrete sidewalk

Macadam sidewalk

Concrete curb

EXISTING HYDRANT TO BE REMOVED, PIPE AND CAP LINE PROPERLY

2 L–12 STABILIZED CONSTRUCTION ENTRANCE

EXISTING CULVERT PIPE TO BE REMOVED

Invert=302.50

WEST AVENUE

Existing 36" dia

307 308 309 310 311

SF JS SAN

SITE PREPARATION & DEMOLITION NOTES:

1. ALL REFUSE, DEBRIS AND MISCELLANEOUS ITEMS TO BE REMOVED, THAT ARE NOT TO BE STOCKPILED FOR LATER USE ON THE PROJECT OR DELIVERED TO THE OWNER, SHALL BE LEGALLY DISPOSED OF OFF–SITE BY THE CONTRACTOR.
2. ALL ITEMS REQUIRING REMOVAL SHALL BE REMOVED TO FULL DEPTH TO INCLUDE BASE MATERIAL AND FOOTINGS OR FOUNDATIONS AS APPLICABLE, AND REUSED AS DIRECTED BY THE OWNER OR LEGALLY DISPOSED OF OFF–SITE BY CONTRACTOR.
3. CONTRACTOR SHALL STRIP AND STOCKPILE EXISTING TOPSOIL TO FULL DEPTH WITHIN LIMIT OF GRADING BEFORE COMMENCING EXCAVATION AND GRADING OPERATIONS. TOPSOIL SHALL NOT BE REMOVED FROM THE SITE, UNLESS APPROVED BY THE OWNER'S REPRESENTATIVE.
4. THE CONTRACTOR IS RESPONSIBLE FOR ANY DAMAGE TO EXISTING CONDITIONS THAT ARE DUE TO CONTRACTOR OPERATIONS AND WHICH ARE OUTSIDE THE LIMIT OF WORK.
5. THE CONTRACTOR SHALL COORDINATE ALL ADJUSTMENT OR ABANDONMENT OF UTILITIES WITH THE RESPECTIVE UTILITY COMPANY AND PAY ALL ASSOCIATED COSTS.
6. ALL POINTS OF CONSTRUCTION INGRESS AND EGRESS SHALL BE PROTECTED TO PREVENT TRACKING OF MUD ONTO PUBLIC WAYS. ANY MUD ON PUBLIC WAYS ORIGINATING FROM THE JOB SITE SHALL BE CLEANED BY THE CONTRACTOR DAILY.
7. CONTRACTOR SHALL SECURE ALL PERMITS THAT MAY BE REQUIRED FROM ALL JURISDICTIONS AFFECTED BY THIS WORK.
8. ANY TREE AND SHRUB REMOVAL SHALL INCLUDE THE FILLING, CUTTING, GRUBBING OUT OF ENTIRE ROOT SYSTEM AND SATISFACTORY OFF–SITE DISPOSAL OF ALL TREES, SHRUBS, STUMPS, VEGETATIVE AND EXTRANEOUS DEBRIS PRODUCED THROUGH THE REMOVAL OPERATIONS.
9. CONTRACTOR SHALL APPLY FOR AND OBTAIN DEMOLITION PERMIT FROM CITY PRIOR TO ANY DEMOLITION WORK ON–SITE. EXISTING WATER AND SEWER DISCONNECTIONS MUST BE DEMONSTRATED TO CITY ENGINEER.

BORING RESULTS FROM GEOTECHNICAL EVALUATION FOR PROPOSED OFFICE COMPLEX: PREPARED BY, DENTE ENGINEERING: APRIL 2005

BORING 1:
0–8" TOPSOIL
8"–96" BROWN F–M SAND, TRACE SILT: WET AT 84"
96"–21' GRADES F–C SAND, LITTLE FINE GRAVEL, TRACE SILT
21'–26' GRADES DARK GRAY
26'–31' GRADES GRAY FINE SAND, TRACE SILT
31'–46' GRAY F–M SAND, SOME SILT
46'–51' GRADES SILT, TRACE FINE SAND
51'–52' GRADES FINE SAND, TRACE SILT

BORING 2:
0–10" TOPSOIL
10"–60" BROWN F–M SAND, TRACE SILT
60"–84" BROWN FINE SAND & SILT WITH PARTINGS FINE SAND, TRACE SILT
84"–17' FROWN F–C SAND, TRACE TO LITTLE FINE GRAVEL, TRACE SILT: WET AT 84"

BORING 3:
0–12" TOPSOIL BECOMES BROWN F–M SAND TRACE SILT
12"–9' DARK BROWN F–M SAND, TRACE SILT: WET AT 9'
9'–16' BROWN F–C SAND, TRACE TO LITTLE FINE GRAVEL, TRACE SILT
16'–17' BECOMES GRAY SAND

BORING 4:
0–12" TOPSOIL BECOMES BROWN F–M SAND, TRACE SILT
12"–96" BROWN F–M SAND, TRACE SILT
96"–10' MOTTLED SILT, SOME FINE SAND: WET AT 10'
10'–16' BROWN F–C SAND, TRACE SILT
16'–17' GRADES TRACE FINE GRAVEL

BORING 5:
0–8" TOPSOIL
8"–84" BROWN F–M SAND, SOME SILT TRACE GRAVEL: POSSIBLE FILL: WET AT 60"
84"–16' BROWN F–C SAND TRACE GRAVEL & SILT
16'–17' BECOMES GRAY/BROWN SAND

LEGEND

- EXISTING BUILDING OR PAVEMENT TO BE REMOVED
- EXISTING VEGETATION TO BE REMOVED
- SF SILT FENCE TYP. (3 / L–11)

GRAPHIC SCALE
10 0 5 10 20
1 inch = 10 feet

Approval

Approved under authority of a resolution adopted _____ by the Planning Board of the City of Saratoga Springs.

_____ Chairperson

Date Signed _____

the LA group
Landscape Architecture and Engineering, PC
40 Long Alley
Saratoga Springs
New York 12866
P 518/587-8100
F 518/587-0180
www.thelagroup.com

Unauthorized alteration or addition to this document is a violation of Section 7209 of the New York State Education Law

© the LA Group 2008

Design MCB
Drawn MCB
Checked CMI

PREPARED FOR:
John-Paul Builders, LLC
796 Burdeck Street
Schenectady, NY 12306

246 WEST AVENUE APARTMENTS

SARATOGA SPRINGS, NY

Title
SITE DEMOLITION AND PREPERATION PLAN

Revisions

City #:
Project: 201178
Date: 6/23/2016

Drawing
L-1

Plotted By: ANDREW LONGLACKER
Save Date: 6/22/2016 11:19 PM
File Name: C:\Proj\201178\CAD\L1\L1_West_Ave_246\201178CAD1_L1_EC.dwg

LANDS OF
DAVID E. FRANTZ & CAROL A.
FRANTZ

CONCRETE DUMPSTER PAD WITH FENCE ENCLOSURE (8/L-8)
DO NOT ENTER SIGN
PARKING LOT LIGHT POLE (6/L-8, 1/L-6)
PAVEMENT MARKING
LAWN
24' REAR YARD BUILDING SETBACK LINE
STONE DRIP STRIP TYP.
CONCRETE TRANSITION CURB (3/L-7)
CONCRETE CURB TYP. (2/L-7)
GRAVEL DRIP STRIP TYP.
BUILDING OVERHANG TYP.
BUILDING FOOTPRINT LINE TYP.
EXISTING ASPHALT BIKE PATH.
ASPHALT PAVING (1/L-7)
STONE DRIP STRIP TYP.
KNOX BOX LOCATION
12' FRONT BUILD TO LINE
STOP SIGN. (8/L-7)
DETECTABLE WARNING STRIP TYP. (11/L-7)
6' WIDE BENCH (4/L-12)
INTERPRETIVE SIGN (8/L-12)
PROPOSED BIKE RACK (9/L-12)
CONCRETE PAVERS (12/L-7)
EXISTING STREET LIGHT
DECORATIVE STREET LIGHT (4/L-8)
UTILITY POLE TO REMAIN
CONCRETE PAVEMENT ENTRANCE (7/L-7)
CONCRETE WALK TYP. (5/L-7)
Concrete sidewalk
Macadam sidewalk
Concrete curb
Cedar Trees & Bushes
Rental cabins
41
42
43/44
45
46/47
LANDS OF
MORRIS D. STRAUSS, ESQ.
"ADIRONDACK INN"
LANDS OF
THE YOUNG MEN'S CHRISTIAN
ASSOCIATION
OF SARATOGA SPRINGS
Saratoga County Sewer District no. 1
Sanitary sewer easement (Ref. L.1950 p.113)
Existing 36" dia
WEST AVENUE

LAYOUT NOTES

1. ALL LINES AND DIMENSIONS ARE PARALLEL OR PERPENDICULAR TO THE LINES FROM WHICH THEY ARE MEASURED UNLESS OTHERWISE INDICATED.
2. ALL LINE AND GRADE PER DRAWINGS SHALL BE LAID OUT BY A NEW YORK STATE REGISTERED CIVIL ENGINEER OR SURVEYOR ENGAGED BY THE CONTRACTOR. ALL STAKED LAYOUTS OF PAVEMENTS AND SITE IMPROVEMENTS SHALL BE APPROVED BY THE OWNER'S REPRESENTATIVE PRIOR TO INSTALLATION.
3. STORAGE AREAS FOR CONTRACTOR'S EQUIPMENT AND MATERIALS SHALL BE ON AND WITHIN LIMITS OF WORK AS SHOWN ON THE PLANS AND AS APPROVED BY THE OWNER'S REPRESENTATIVE.
4. THE CONTRACTOR SHALL VERIFY ALL EXISTING CONDITIONS IN THE FIELD PRIOR TO CONSTRUCTION AND REPORT ANY DISCREPANCIES IN THE SITE SURVEY TO THE OWNER'S REPRESENTATIVE PRIOR TO STARTING WORK.
5. AT ALL LOCATIONS WHERE EXISTING CURBING, BITUMINOUS CONCRETE ROADWAY OR CONCRETE SIDEWALK ABUT NEW CONSTRUCTION, THE EDGE OF THE EXISTING CURB OR PAVEMENT SHALL BE SAW CUT TO A CLEAN, SMOOTH EDGE. PROVIDE PAVEMENT KEY AS DETAILED. TACK COAT EXPOSED EDGES OF EXISTING BITUMINOUS CONCRETE PRIOR TO PLACEMENT OF NEW BITUMINOUS CONCRETE PAVEMENT.
6. BITUMINOUS PAVEMENT SHALL NOT BE LAID WHEN GROUND TEMPERATURE IS LESS THAN 40° F. AND AIR TEMPERATURE IS LESS THAN 50° F.
7. ALL LIGHT STANDARDS SHALL BE LOCATED AT A MINIMUM OF TWO FEET SIX INCHES (2'-6") FROM BACK OF EOP; VERIFY W/ OWNER'S REPRESENTATIVE PRIOR TO INSTALLATION.
8. DIMENSIONS ON PARKING LOTS AND ROADWAYS ARE FROM FACE OR BOTTOM OF CURB TO FACE OR BOTTOM OF CURB.
9. ALL NEW WORK SHALL BE STAKED-OUT PRIOR TO CONSTRUCTION. THE OWNER'S REPRESENTATIVE SHALL BE NOTIFIED OF ANY DISCREPANCIES.
10. FIELD ADJUSTMENTS MUST BE APPROVED BY THE OWNER'S REPRESENTATIVE AND CITY ENGINEER WITHOUT EXCEPTION.
11. ALL EXISTING UTILITIES SHOWN IN THEIR RELATIVE POSITION. THE CONTRACTOR IS RESPONSIBLE FOR VERIFYING THE VERTICAL AND HORIZONTAL POSITION OF EXISTING UTILITIES PRIOR TO CONSTRUCTION.

LEGEND

- CURB
- CONCRETE SIDEWALK (SC, EJ)
- PROPERTY LINE
- POWER LINE EASEMENT
- ACCESSIBLE PARKING
- TRAFFIC PATTERN ARROW
- SIGNAGE
- REINFORCED SWALE

GRAPHIC SCALE
10 0 5 10 20
1 inch = 10 feet

Approval

Approved under authority of a resolution adopted _____ by the Planning Board of the City of Saratoga Springs.

_____ Chairperson

Date Signed _____

the LA group
Landscape Architecture and Engineering, PC
40 Long Alley
Saratoga Springs
New York 12866
P 518/587-8100
F 518/587-0180
www.thelagroup.com

Unauthorized alteration or addition to this document is a violation of Section 7209 of the New York State Education Law

© the LA Group 2008

Design MCB
Drawn MCB
Checked CMI

PREPARED FOR:
John-Paul Builders, LLC
796 Burdeck Street
Schenectady, NY 12306

246 WEST AVENUE APARTMENTS

SARATOGA SPRINGS, NY

Title: SITE LAYOUT AND MATERIALS PLAN

Revisions

City #:
Project: 201178
Date: 6/23/2016

Drawing
L-2

Plotted By: MATT BRUBSTEIN
Plot Date: 6/23/2016 9:32:3 AM
File Name: G:\Projects\201178_West_Ave_2482\201178CADs\2_LAYOUT.dwg

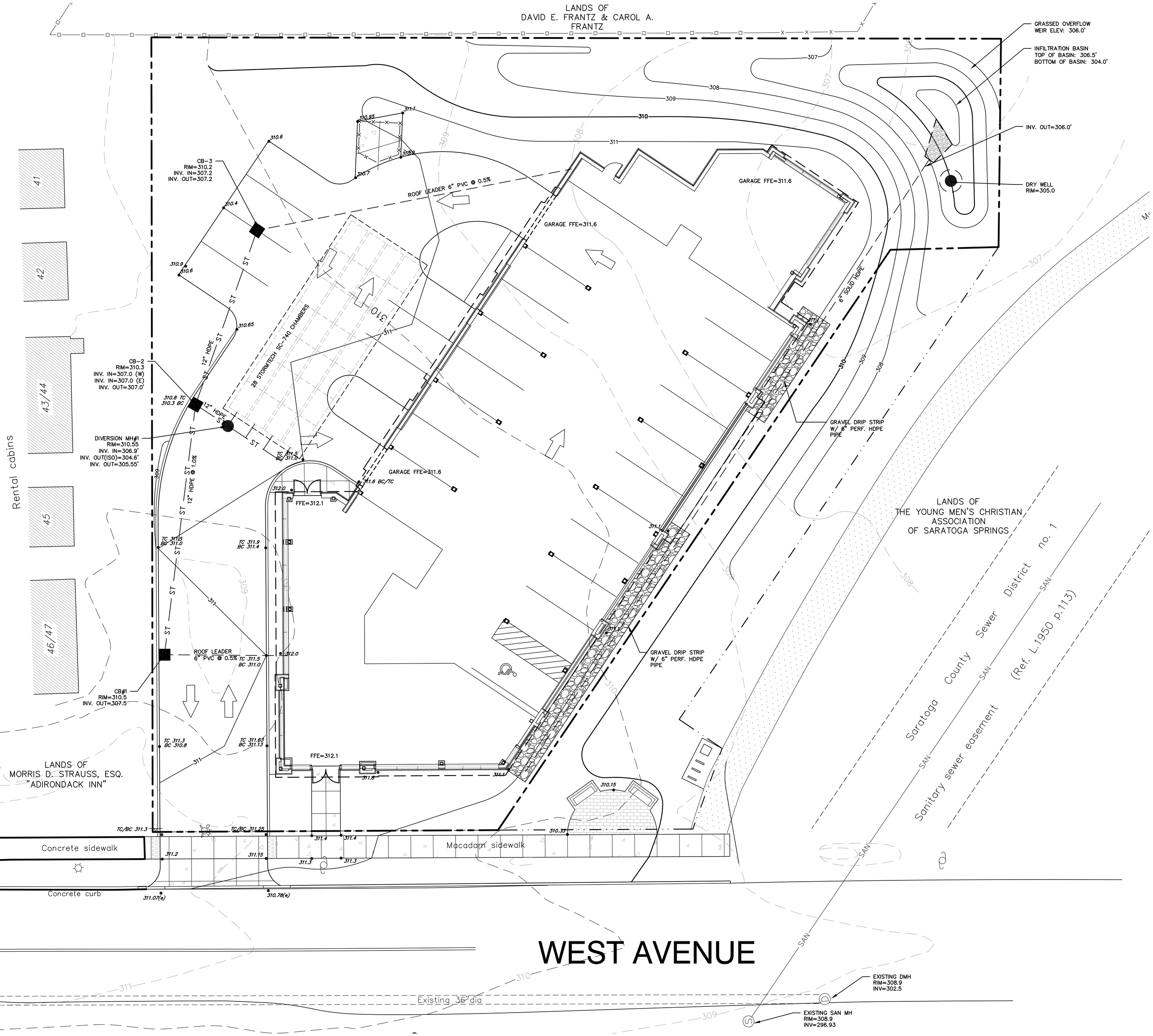

GRADING NOTES

1. SURVEY INFORMATION PROVIDED BY SANTO ASSOCIATES LAND SURVEYING AND ENGINEERING, P.C., BASED UPON A FIELD SURVEY COMPLETED SEPTEMBER 30, 2011
2. ALL GRADES SET IN THE FIELD SHALL BE COMPLETED BY A NEW YORK STATE LICENSED LAND SURVEYOR.
3. THE CONTRACTOR SHALL VERIFY ALL CONDITIONS IN THE FIELD AND REPORT ANY DISCREPANCIES BETWEEN THE PLANS AND ACTUAL CONDITIONS TO THE OWNER'S REPRESENTATIVE.
4. THE CONTRACTOR SHALL VERIFY PROPOSED GRADES PRIOR TO CONSTRUCTION AND REPORT ANY DISCREPANCIES TO THE OWNER'S REPRESENTATIVE.
5. THE CONTRACTOR SHALL PROVIDE DUST AND EROSION CONTROL AS APPROVED BY THE OWNER'S REPRESENTATIVE.
6. ALL FILL SLOPES 3:1 OR GREATER SHALL RECEIVE BIO-DEGRADEABLE FABRIC OR APPROVED EQUAL FOR EROSION CONTROL, UNLESS OTHERWISE SHOWN OR DIRECTED BY THE OWNER'S REPRESENTATIVE.
7. THE CONTRACTOR SHALL BLEND ALL NEW EARTHWORK INTO EXISTING GRADES AT THE LIMITS OF GRADING. PROVIDE SMOOTH ROUNDED TRANSITIONS AT ALL TOP AND BOTTOM OF SLOPES.

LEGEND

- 320 — EXISTING CONTOUR LINE
- 320 — PROPOSED CONTOUR LINE
- EXISTING STORM MAIN
- PROPOSED STORM MAIN
- PROPOSED BUILDING DRAINAGE LINES
- PROPOSED DRYWELL
- PROPOSED CATCH BASIN
- EXISTING SANITARY SEWER MANHOLE
- SAN — EXISTING SANITARY SEWER MAIN LINE

GRAPHIC SCALE

10 0 5 10 20

1 inch = 10 feet

Approval

Approved under authority of a resolution adopted by the Planning Board of the City of Saratoga Springs.

Chairperson

Date Signed

the LA group
Landscape Architecture and Engineering, PC
40 Long Alley
Saratoga Springs
New York 12866
P 518/587-8100
F 518/587-0180
www.thelagroup.com

Unauthorized alteration or addition to this document is a violation of Section 7209 of the New York State Education Law

© the LA Group 2008

Design MCB
Drawn MCB
Checked CMI

PREPARED FOR:
John-Paul Builders, LLC
796 Burdeck Street
Schenectady, NY 12306

246 WEST AVENUE APARTMENTS

SARATOGA SPRINGS, NY

Title
SITE GRADING AND DRAINAGE PLAN

Revisions

City #:
Project: 201178
Date: 6/23/2016

Drawing
L-3

LANDS OF
DAVID E. FRANTZ & CAROL A.
FRANTZ

LANDS OF
THE YOUNG MEN'S CHRISTIAN
ASSOCIATION
OF SARATOGA SPRINGS

LANDS OF
MORRIS D. STRAUSS, ESQ.
"ADIRONDACK INN"

GARAGE FF ELEV.=311.6

FF ELEV.=312.1

SANITARY INV=303.10

3 L-10 SANITARY CLEANOUT
INV=304.58

Concrete sidewalk

Macadam sidewalk

Concrete curb

WEST AVENUE

6" D.I.P. WATERLINE

54 LF - 6" PVC SDR26 @ 5.0%

4 L-9 INSTALL 12"X6" TEE, 6" GATE VALVE,
AND 12" BUTTERFLY VALVE

12" D.I.P. WATERMAIN

SEE SHEET L-4.1 FOR OFF-SITE WATERLINE

1 L-9

5 L-9

Existing 36"dia

56 LF - 8" C-900 @ 0.5%

SMH-1
RIM=309.75
6" INV IN=300.4
8" INV OUT=299.91

1 L-10

EXISTING SAN MH
RIM=308.9
INV=296.93
INSIDE DROP CONNECTION
8" INV IN=299.63

CAP END FOR FUTURE CONNECTION

Saratoga County Sewer District no. 1

Sanitary sewer easement (Ref. L.1950 p.113)

43/44

45

46/47

WATER SYSTEM NOTES

A. The location of underground utilities shown on this plan are for information only, and all utilities may not be shown. The Contractor shall contact U.F.P.O. (1-800-962-7962) and the proper local authorities or respective utility company having jurisdiction to field verify the location of all existing utilities before commencing work. Any costs incurred by the Contractor due to failure to contact the proper authorities shall become the responsibility of the Contractor.

B. Extend designated limit of work as necessary to accomplish site utility work as required by these Drawings and Specifications.

C. Water Service lines 4-inch and larger:

1. Pipe and Fittings
   a. Ductile Iron Pipe: Class 52, ANSI/AWWA C151/A21.51
   b. Mechanical Joint fittings: ANSI standard A21.10 and A21.11 (AWWA C110 and C111) Class 350.
2. Coatings
   a. Double cement mortar lining on interior and coal tar seal coat on interior and exterior in accordance with ANSI/AWWA C104/A21.11
3. Joints
   a. Conforming with ANSI/AWWA C111/A21.11
   b. Pipe – push on joint.
   c. fittings – mechanical joint, plain rubber gasket together with retainer glands having steel set screws.
4. Valve Boxes
   a. Cast iron two piece valve box as manufactured by Clow (Model F2454), or approved equal.
   b. Cover must be stay-put type (Clow Model F2490), or approved equal, and be clearly marked "Water."
5. Anchorage
   a. Concrete thrust blocks must be used at all changes in direction of 11 1/4° or greater, and at all tees, caps, fittings, hydrants and plugs.

D. Water service lines 2 1/2-inch and smaller (no line shall be smaller than 3/4-inch):

1. Pipe
   a. Copper water tube, type K, soft temper for underground service.
2. Corporation Stops
   a. Mueller H-15008 with AWWA inlet threads or approved equal.
   b. Valves 1 1/2-inch and larger must be used with tapping sleeve.
3. Curb-stop
   a. Mueller H-15209 or H-15219 curb-stops, non-draining or approved equal.
4. Couplings
   a. Mueller H-15403 110 compression connections or approved equal; three part union for copper-to-copper type connection.
5. Curb-box
   a. Mueller H-10314
   b. Extension type with arch pattern base or approved equal.
   c. Solid cover (Mueller or approved equal).
   d. Stationary rod.

E. Valves, Hydrants, etc.:

1. Valves – Mueller A-2380-20
   a. All valves under 12-inches in diameter shall be mechanical joint resilient wedge (R/W).
   b. R/W valves, 3-inches and larger, shall be iron body, non-rising stem conforming to AWWA C509. Gland bolts shall be zinc coated steel.
   c. All valves shall have a maximum working pressure rating of 200 psig.
   d. All valves shall have mechanical joint ends conforming to ANSI A21.10/A21.11
   e. Valves shall open right (clockwise) with a standard 2-inch square operating nut with arrow cast on it showing the direction of opening.
   f. Each valve shall be furnished complete with necessary nuts, bolts, studs and gaskets.
2. Butterfly Valves – Mueller Lineseal III
   a. With the exception of tapping valves, all valves 12-inches in diameter and larger shall be Mueller, or approved equal, butterfly valves.
   b. Butterfly valves, 12-inches and larger, shall be iron body, bronze mounted, 360-degree rubber seat with stainless steel shaft conforming to AWWA C504. gland bolts shall be zinc coated steel.
   c. All valves shall have a minimum working pressure rating of 200 psi.
   d. All valves shall have mechanical joint ends conforming to ANSI A21.10, A21.11.
   e. Valves shall open right (clockwise) with a standard 2-inch square operating nut with arrow cast on it showing the direction of opening.
   f. Valve shall operate using traveling nut.
   g. The valve disk shall hold at any position without fluttering or creeping.
   h. The valve shall be equipped with a mechanical stop to prevent overtravel.
   i. Each valve shall be furnished complete with necessary nuts, bolts, studs, and gaskets which conform to AWWA C-110, AWWA C-111.
3. Fire Hydrants shall be Mueller A-423 compression-type hydrant, or approved equal having the following features
   a. 5 1/4-inch valve opening with a 6-inch inlet.
   b. Two (2) 2 1/2-inch hose nozzle and one (1) 4" Storz pumper nozzle; national standard thread.
   c. Operating nut shall be national standard, pentagon shaped, 1/8-inch point to flat.
   d. Break flange – traffic type construction
   e. Open right (clockwise)
   f. Hydrants are to be painted a minimum of one (1) coat primer and one (1) finish coat of industrial enamel as per paint schedule.

F. Water mains and services shall be installed at a minimum cover depth below finished grade of 5'-0".

G. Chlorination, pressure and leakage tests of water mains shall be in conformance with the specifications, NYSDOH regulations, and AWWA Standards and shall be performed under the supervision of the Owner's Representative and City Engineer. Bacteria examination after disinfection at a NYSDOH approved laboratory will take place prior to turning water main over to the Owner.

H. Water valve boxes, existing structure rims, new structure rims, etc., shall be adjusted to conform to new finished pavement grades unless otherwise noted and/or directed by Owner's Representative.

SEWER SYSTEM NOTES

1. Installation of polyvinyl chloride plastic (PVC) sewer pipe shall be in accordance with manufacturer's installation recommendations, and in accordance with ASTM D 2321.
2. Manhole frames and covers shall be Campbell Foundry Co. pattern No. 12038 or approved equal. The cover shall be embossed with "City of Saratoga Springs Sanitary Sewer". Provide (4) 7/8" dia. vent holes in cover.
3. Sanitary sewer manholes shall be precast reinforced concrete, complying with ASTM C 478. Base section to be pre-cast with integral floor. Top section shall be precast eccentric cone or flat slab traffic top as required. Steps of copolymer polypropylene integrally cast into the manhole sidewalls. Pipe to manhole connection shall be "Press-Wedge II" seal, or approved equivalent.
4. All sewer piping and fittings shall conform to the Standard Specifications for PVC pipe, ASTM designation D-3034-78 or latest revision and to the dimensions and tolerances of classification SDR-26 with single gasket push-on joints.
5. Product data information and shop Drawings for materials proposed for use by the contractor shall be submitted to and approved by the Architect prior to the placement of any orders for said materials.
6. Leakage outward or inward shall not exceed 200 gallons per inch of pipe diameter per mile per day for any section of the system. Leakage test shall be performed with a minimum positive head of 2 feet.

LEGEND

- 320 — EXISTING CONTOUR LINE
- 320 — PROPOSED CONTOUR LINE
- EXISTING STORM MAIN
- PROPOSED STORM MAIN
- PROPOSED BUILDING DRAINAGE LINES
- PROPOSED DRYWELL
- PROPOSED CATCH BASIN
- EXISTING SANITARY SEWER MANHOLE
- PROPOSED SANITARY SEWER MANHOLE
- SAN — EXISTING SANITARY SEWER MAIN LINE
- PROPOSED SANITARY SEWER MAIN LINE
- PROPOSED WATER LINE

GRAPHIC SCALE
10 0 5 10 20
1 inch = 10 feet

Approval

Approved under authority of a resolution adopted _____ by the Planning Board of the City of Saratoga Springs.

_____ Chairperson

Date Signed _____

the LA group
Landscape Architecture and Engineering, PC
40 Long Alley
Saratoga Springs
New York 12866
P 518/587-8100
F 518/587-0180
www.thelagroup.com

Unauthorized alteration or addition to this document is a violation of Section 7209 of the New York State Education Law

© the LA Group 2008

Design MCB
Drawn MCB
Checked CMI

PREPARED FOR:
John-Paul Builders, LLC
796 Burdeck Street
Schenectady, NY 12306

246 WEST AVENUE APARTMENTS

SARATOGA SPRINGS, NY

Title SITE UTILITY PLAN

Revisions

City #:
Project: 201178
Date: 6/23/2016

Drawing L-4

Plotted By: MATT BROBSTON
Save Date: 6/22/2016 5:18 PM
File Name: C:\Projects\201178_West_Ave_246\2011178CAD\L-4_UTIL.dwg

WATER SYSTEM NOTES

A. The location of underground utilities shown on this plan are for information only, and all utilities may not be shown. The Contractor shall contact U.F.P.O. (1-800-962-7962) and the proper local authorities or respective utility company having jurisdiction to field verify the location of all existing utilities before commencing work. Any costs incurred by the Contractor due to failure to contact the proper authorities shall become the responsibility of the Contractor.

B. Extend designated limit of work as necessary to accomplish site utility work as required by these Drawings and Specifications.

C. Water Service lines 4-inch and larger:

1. Pipe and Fittings
   a. Ductile Iron Pipe: Class 52, ANSI/AWWA C151/A21.51
   b. Mechanical Joint fittings: ANSI standard A21.10 and A21.11 (AWWA C110 and C111) Class 350.
2. Coatings
   a. Double cement mortar lining on interior and coal tar seal coat on interior and exterior in accordance with ANSI/AWWA C104/A21.11
3. Joints
   a. Conforming with ANSI/AWWA C111/A21.11
   b. Pipe – push on joint.
   c. fittings – mechanical joint, plain rubber gasket together with retainer glands having steel set screws.
4. Valve Boxes
   a. Cast iron two piece valve box as manufactured by Clow (Model F2454), or approved equal.
   b. Cover must be stay-put type (Clow Model F2490), or approved equal, and be clearly marked "Water."
5. Anchorage
   a. Concrete thrust blocks must be used at all changes in direction of 11 1/4° or greater, and at all tees, caps, fittings, hydrants and plugs.

D. Water service lines 2 1/2-inch and smaller (no line shall be smaller than 3/4-inch):

1. Pipe
   a. Copper water tube, type K, soft temper for underground service.
2. Corporation Stops
   a. Mueller H-15008 with AWWA inlet threads or approved equal.
   b. Valves 1 1/2-inch and larger must be used with tapping sleeve.
3. Curb-stop
   a. Mueller H-15209 or H-15219 curb-stops, non-draining or approved equal.
4. Couplings
   a. Mueller H-15403 110 compression connections or approved equal; three part union for copper-to-copper type connection.
5. Curb-box
   a. Mueller H-10314
   b. Extension type with arch pattern base or approved equal.
   c. Solid cover (Mueller or approved equal).
   d. Stationary rod.

E. Valves, Hydrants, etc.:

1. Valves – Mueller A-2380-20
   a. All valves under 12-inches in diameter shall be mechanical joint resilient wedge (R/W).
   b. R/W valves, 3-inches and larger, shall be iron body, non-rising stem conforming to AWWA C509. Gland bolts shall be zinc coated steel.
   c. All valves shall have a maximum working pressure rating of 200 psig.
   d. All valves shall have mechanical joint ends conforming to ANSI A21.10/A21.11
   e. Valves shall open right (clockwise) with a standard 2-inch square operating nut with arrow cast on it showing the direction of opening.
   f. Each valve shall be furnished complete with necessary nuts, bolts, studs and gaskets.
2. Butterfly Valves – Mueller Lineseal III
   a. With the exception of tapping valves, all valves 12-inches in diameter and larger shall be Mueller, or approved equal, butterfly valves.
   b. Butterfly valves, 12-inches and larger, shall be iron body, bronze mounted, 360-degree rubber seat with stainless steel shaft conforming to AWWA C504. gland bolts shall be zinc coated steel.
   c. All valves shall have a minimum working pressure rating of 200 psi.
   d. All valves shall have mechanical joint ends conforming to ANSI A21.10, A21.11.
   e. Valves shall open right (clockwise) with a standard 2-inch square operating nut with arrow cast on it showing the direction of opening.
   f. Valve shall operate using traveling nut.
   g. The valve dish shall hold at any position without fluttering or creeping.
   h. The valve shall be equipped with a mechanical stop to prevent overtravel.
   i. Each valve shall be furnished complete with necessary nuts, bolts, studs, and gaskets which conform to AWWA C-110, AWWA C-111.
3. Fire Hydrants shall be Mueller A-423 compression-type hydrant, or approved equal having the following features
   a. 5 1/4-inch valve opening with a 6-inch inlet.
   b. Two (2) 2 1/2-inch hose nozzle and one (1) 4" Storz pumper nozzle; national standard thread.
   c. Operating nut shall be national standard, pentagon shaped, 1/8-inch point to flat.
   d. Break flange – traffic type construction
   e. Open right (clockwise)
   f. Hydrants are to be painted a minimum of one (1) coat primer and one (1) finish coat of industrial enamel as per paint schedule.

F. Water mains and services shall be installed at a minimum cover depth below finished grade of 5'-0".

G. Chlorination, pressure and leakage tests of water mains shall be in conformance with the specifications, NYSDOH regulations, and AWWA Standards and shall be performed under the supervision of the Owner's Representative and City Engineer. Bacteria examination after disinfection at a NYSDOH approved laboratory will take place prior to turning water main over to the Owner.

H. Water valve boxes, existing structure rims, new structure rims, etc., shall be adjusted to conform to new finished pavement grades unless otherwise noted and/or directed by Owner's Representative.

1 WATER AND STORM DRAIN CROSSING DETAIL

SCALE: NTS

SEWER SYSTEM NOTES

1. Installation of polyvinyl chloride plastic (PVC) sewer pipe shall be in accordance with manufacturer's installation recommendations, and in accordance with ASTM D 2321.
2. Manhole frames and covers shall be Campbell Foundry Co. pattern No. 1203B or approved equal. The cover shall be embossed with "City of Saratoga Springs Sanitary Sewer". Provide (4) 7/8" dia. vent holes in cover.
3. Sanitary sewer manholes shall be precast reinforced concrete, complying with ASTM C 478. Base section to be pre-cast with integral floor. Top section shall be precast eccentric cone or flat slab traffic top as required. Steps of copolymer polypropylene integrally cast into the manhole sidewalls. Pipe to manhole connection shall be "Press-Wedge II" seal, or approved equivalent.
4. All sewer piping and fittings shall conform to the Standard Specifications for PVC pipe, ASTM designation D-3034-78 or latest revision and to the dimensions and tolerances of classification SDR-26 with single gasket push-on joints.
5. Product data information and shop Drawings for materials proposed for use by the contractor shall be submitted to and approved by the Architect prior to the placement of any orders for said materials. Copy City engineer on shop drawings/ submittals
6. Leakage outward or inward shall not exceed 200 gallons per inch of pipe diameter per mile per day for any section of the system. Leakage test shall be performed with a minimum positive head of 2 feet.

NOTES PER SARATOGA COUNTY SEWER DISTRICT

1. SDR 26 PIPE WITH SDR 26/35 FITTINGS WILL BE USED FOR SERVICE LATERALS.
2. THE CONTRACTOR WILL CONTACT SCSD (518)664-7396 AT LEAST 48 HOURS BEFORE CONSTRUCTION BEGINS.
3. THE CONTRACTOR SHALL FIELD VERIFY AND CONFIRM GRADES OF EXISTING MANHOLES BEFORE CONSTRUCTION BEGINS.
4. NO DISCHARGE OF FLOWS WILL BE ALLOWED UNTIL FINAL APPROVAL OF THE PROJECT HAS BEEN GRANTED.

Approval
Approved under authority of a resolution adopted by the Planning Board of the City of Saratoga Springs.
Chairperson ____________
Date Signed ____________

the LA group
Landscape Architecture and Engineering, PC
40 Long Alley
Saratoga Springs
New York 12866
P 518/587-8100
F 518/587-0180
www.thelagroup.com

Unauthorized alteration or addition to this document is a violation of Section 7209 of the New York State Education Law

© the LA Group 2008

Design	MCB
Drawn	MCB
Checked	CMI

PREPARED FOR:
John-Paul Builders, LLC
796 Burdeck Street
Schenectady, NY 12306

246 WEST AVENUE APARTMENTS

SARATOGA SPRINGS, NY

Title
OFF-SITE WATERLINE CONNECTION

Revisions

City #:
Project: 201178
Date: 6/23/2016

Drawing
L-4.1

Plotted By: MATT BROBSTON
Save Date: 6/22/2016 5:19 PM
File Name: G:\Proj-2011\201178_West_Ave_246\201178CAD\L-4-1_OFFSITE_UTIL.dwg

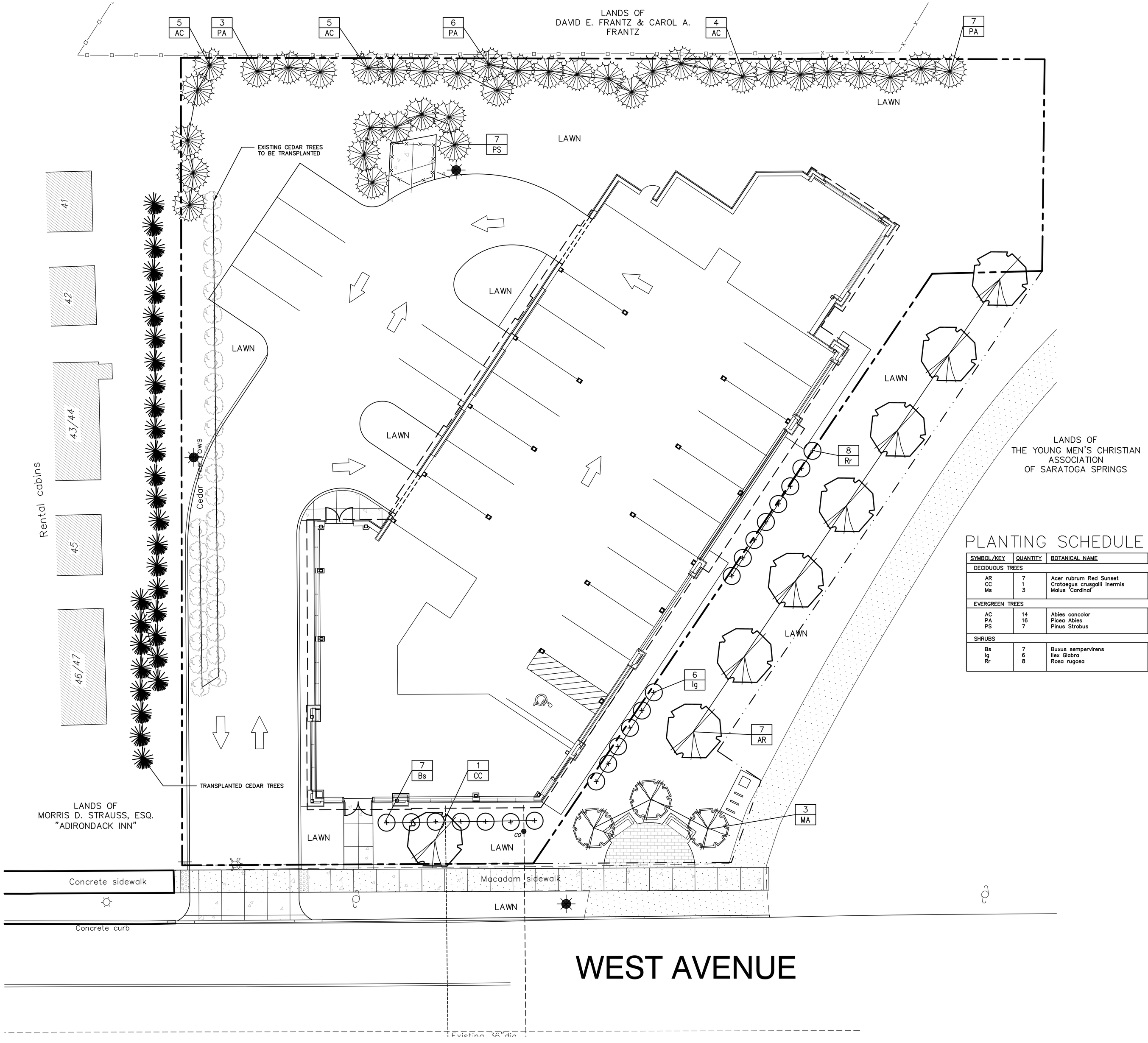

PLANTING NOTES

1. All new plant material shall conform to the minimum guidelines established by the American Standard for Nursery Stock Published by the American Association of Nurserymen, Inc.
2. All new plants to be balled and burlapped or container-grown unless otherwise noted on plant list.
3. Any proposed substitutions of plant species shall be made with plants of equivalent overall form, height, branching habit, flower, leaf, color, fruit and culture, and only as approved by the Owner's Representative.
4. All new plant material for the project shall be of specimen quality unless approved otherwise by Owner's Representative.
5. Where plants size is indicated as a range, the plants provided shall be a fair representation of that range.
6. The Contractor shall supply all new plant material in quantities sufficient to complete the planting shown on the Drawings.
7. Contractor shall obtain plant approval from Owner's Representative after delivery and prior to installation.
8. Lawn Mix:

% BY WEIGHT	SPECIES%	GERMINATION
30%	Tall Fescues	90%
20%	Hybrid Kentucky Blue	87%
50%	Turf-Type Perennial Rye	90%

9. Contractor shall locate and verify all existing utility lines prior to planting and shall report any conflicts to the Owner's Representative.
10. Stake location of all proposed planting for approval by the Owner's Representative prior to the commencement of planting.
11. New plant material shall bear same relationship to finished grade as it bore to previous grade in the nursery.
12. All plant beds to receive three inches (3") of bark mulch on weed barrier fabric or as per Specifications.
13. Prepare all planting beds to minimum overall depths shown on planting details.
14. Amended topsoil backfill shall consist of (1) part manure to (8) parts topsoil and bonemeal @ 20 lbs. to 4 cu. yds. topsoil.
15. All disturbed areas not scheduled for other work shall receive four inches (4") of suitable on-site or imported planting soil prior to seeding or sodding as specified.
16. Contractor shall guarantee all planted materials a minimum of 1 year time.
17. Contractor shall maintain all work including watering, mowing, and protection from traffic until final acceptance of the project.
18. Contractor is responsible to repair or replace all items damaged outside construction limits or disturbed on site which are not part of the identified work of this Contract.
19. Contractor to provide and maintain erosion control measures as shown on the plans and as required in the field. Remove upon stabilization of ground cover.

PLANTING SCHEDULE

SYMBOL/KEY	QUANTITY	BOTANICAL NAME	COMMON NAME	SIZE	ROOT	COMMENTS
DECIDUOUS TREES						
AR	7	Acer rubrum Red Sunset	Red Sunset Red Maple	2 1/2 – 3" cal	B & B	
CC	1	Crataegus crusgalli inermis	Thornless cockspur hawthorn	2 1/2 – 3" cal	B & B	Used small tree from zoning because of overhead wires
Ms	3	Malus 'Cardinal'	Cardinal Crabapple	2 1/2 – 3" cal	B & B	
EVERGREEN TREES						
AC	14	Abies concolor	White Fir	6 – 7' ht	B & B	
PA	16	Picea Abies	Norway Spruce	6 – 7' ht	B & B	
PS	7	Pinus Strobus	White Pine	6 – 7' ht	B & B	
SHRUBS						
Bs	7	Buxus sempervirens	Common Boxwood	30 – 36"	B & B	
Ig	6	Ilex Glabra	Inkberry	18 – 24"	C.G.	
Rr	8	Rosa rugosa	Rose bush	24 – 30"	C.G.	

GRAPHIC SCALE

10 0 5 10 20

1 inch = 10 feet

Approval

Approved under authority of a resolution adopted by the Planning Board of the City of Saratoga Springs.

Chairperson

Date Signed

the LA group
Landscape Architecture and Engineering, PC
40 Long Alley
Saratoga Springs
New York 12866
P 518/587-8100
F 518/587-0180
www.thelagroup.com

Unauthorized alteration or addition to this document is a violation of Section 7209 of the New York State Education Law

© the LA Group 2008

Design MCB
Drawn MCB
Checked CMI

PREPARED FOR:
John-Paul Builders, LLC
796 Burdeck Street
Schenectady, NY 12306

246 WEST AVENUE APARTMENTS

SARATOGA SPRINGS, NY

Title
SITE LANDSCAPE PLAN

Revisions

City #:
Project: 201178
Date: 6/23/2016

Drawing
L-5

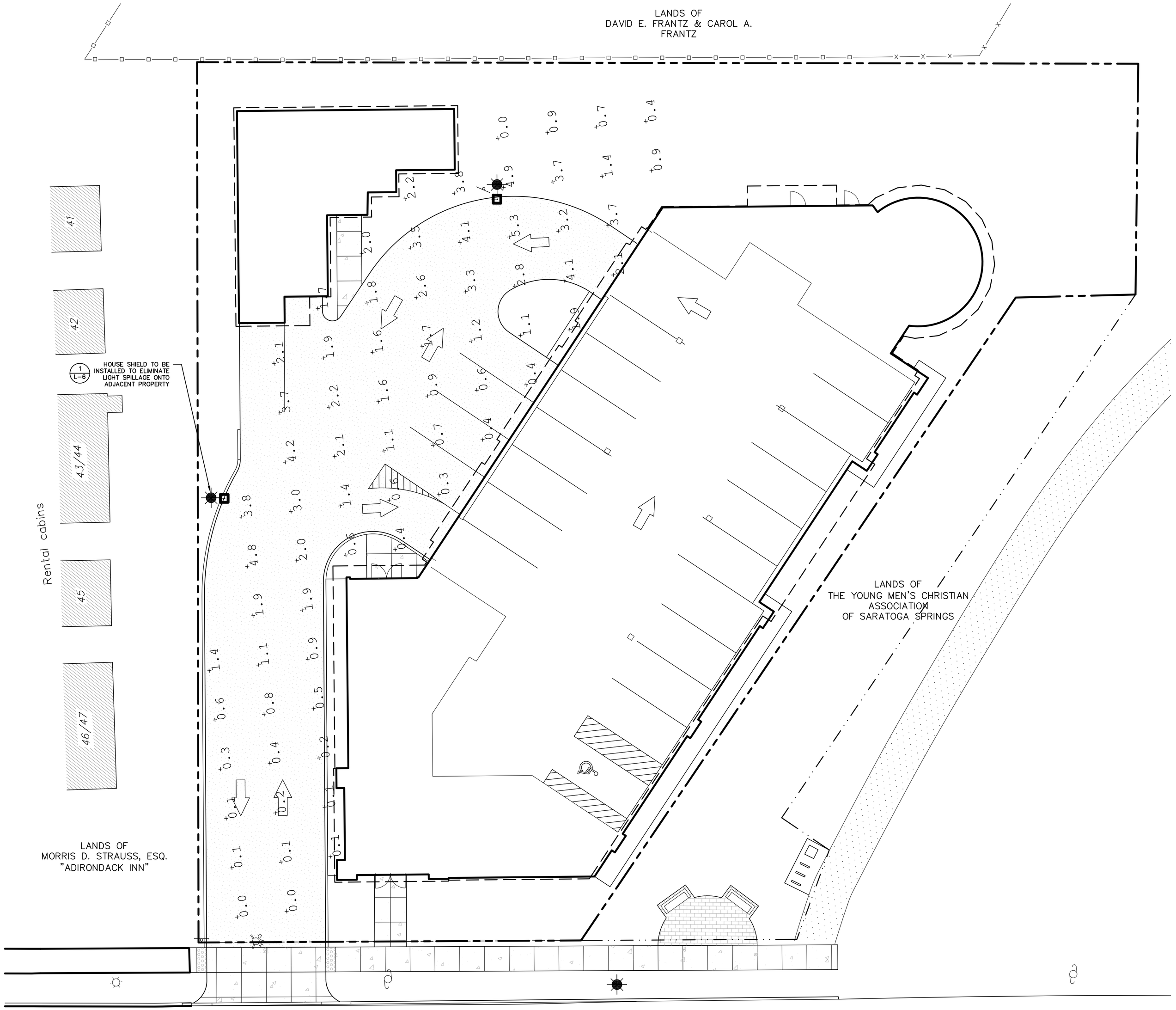

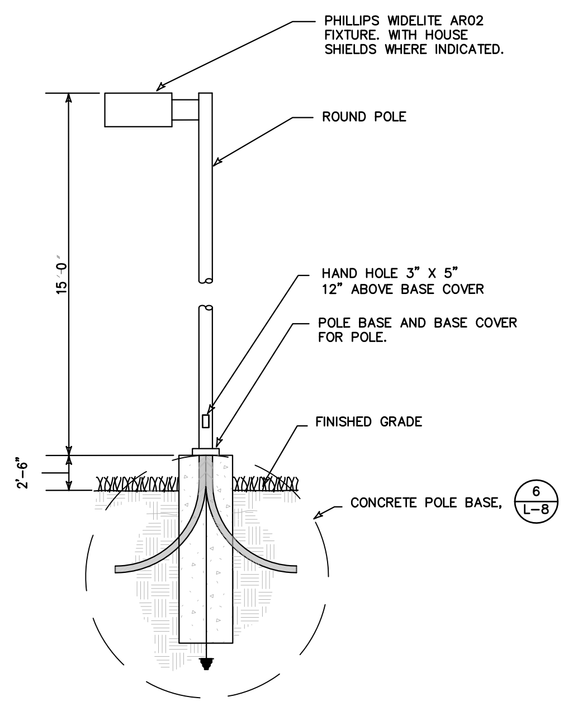

1 PARKING LOT LIGHT POLE DETAIL

SCALE: NTS

WEST AVENUE

Luminaire Schedule						
Symbol	Qty	Label	Arrangement	Total Lamp Lumens	LLF	Description
	2	AR02	SINGLE	13000	0.880	AR02-150H Type 2

GRAPHIC SCALE

10 0 5 10 20

1 inch = 10 feet

Approval

Approved under authority of a resolution adopted _____ by the Planning Board of the City of Saratoga Springs.

_____ Chairperson

Date Signed _____

the LA group
Landscape Architecture and Engineering, PC
40 Long Alley
Saratoga Springs
New York 12866
P 518/587-8100
F 518/587-0180
www.thelagroup.com

Unauthorized alteration or addition to this document is a violation of Section 7209 of the New York State Education Law

© the LA Group 2008

Design MCB
Drawn MCB
Checked CMI

PREPARED FOR:
The PIKE Company, INC.
210 Clifton Corporate Parkway
Clifton Park, NY 12065

246 WEST AVENUE
RESIDENTIAL CONDOMINIUM COMPLEX
SARATOGA SPRINGS, NY

Title
SITE LIGHTING PLAN

Revisions
MYLAR CHECK SET 9/28/2012
MYLAR SET NOVEMBER 2012
May 2014

City #: 12.006.1
Project: 201178
Date: 1/25/2012

Drawing
L-6

Plotted By: MATT BROBSTON
Save Date: 01/16/2013 4:31 PM
File Name: G:\Projects\201178_West_Ave_246\2011178CAD\L-6_LIGHT.dwg

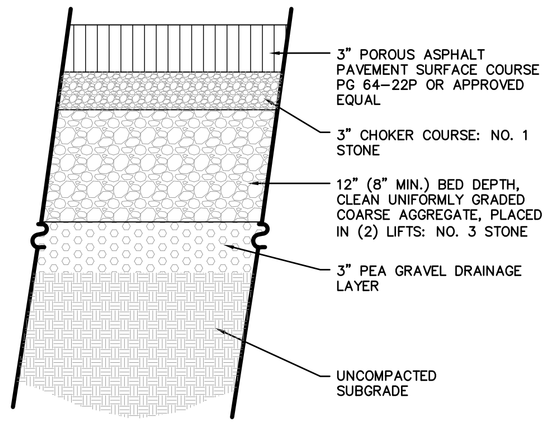

1 POROUS PAVEMENT

N.T.S.

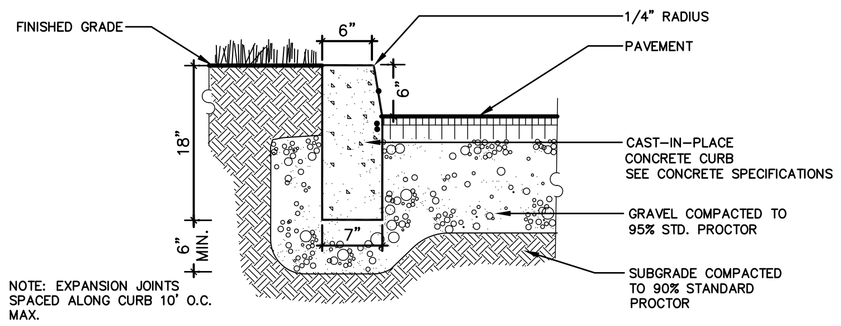

NOTE: EXPANSION JOINTS SPACED ALONG CURB 10' O.C. MAX.

2 CONCRETE CURB DETAIL

N.T.S.

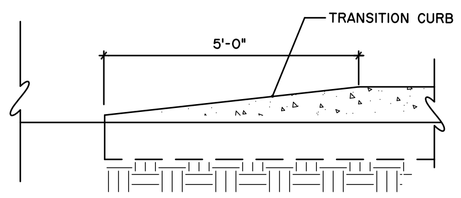

SECTION

3 CURB END TRANSITION DETAIL

N.T.S.

CITY OF SARATOGA SPRINGS

CONCRETE SPECIFICATIONS

THESE GENERAL CONCRETE SPECIFICATIONS SHALL APPLY TO ALL CONCRETE WORK WITHIN THE CITY OF SARATOGA SPRINGS INSTALLED WITHIN A CITY RIGHT-OF-WAY AND/OR WITHIN THE APPROVAL AUTHORITY OF THE PLANNING BOARD.

ALL CONCRETE THAT MAY COME IN CONTACT WITH DEICING CHEMICALS SHALL MEET OR EXCEED THESE MINIMUM SPECIFICATIONS.

CONCRETE SHALL BE ONLY PORTLAND CEMENT CONCRETE AIR-ENTRAINED OF DURABLE MATERIALS AND SHALL HAVE (1) A LOW WATER-CEMENT RATIO (MAXIMUM 0.46), (2) A SLUMP OF 4 INCHES OR LESS.* (3) A CEMENT CONTENT OF 606 LB PER CUBIC YARD OR MORE, (4) PROPER FINISHING AFTER BLEED WATER HAS EVAPORATED FROM THE SURFACE, (5) ADEQUATE DRAINAGE WITH A SLOPE OF 1/8 INCH PER LINEAR FOOT OR MORE, (6) A MINIMUM OF 7 DAYS MOIST CURING AT OR ABOVE 50 DEGREES F, (7) A MINIMUM COMPRESSIVE STRENGTH OF 4000 PSI AT 28 DAYS, AND (8) A MINIMUM 30-DAY DRYING PERIOD AFTER MOIST CURING IF CONCRETE IS PLACED IN THE FALL AND WILL BE EXPOSED TO FREEZE-THAW CYCLES AND DEICERS WHEN SATURATED. THE EXACT LENGTH OF TIME FOR SUFFICIENT DRYING TO TAKE PLACE MAY VARY WITH CLIMATE AND WEATHER CONDITIONS.

TECHNICAL SPECIFICATIONS FOR CONCRETE AS HEREIN DEFINED SHALL COMPLY WITH THE APPLICABLE SPECIFICATIONS OF THE "NEW YORK STATE DEPARTMENT OF TRANSPORTATION STANDARD SPECIFICATIONS CONSTRUCTION AND MATERIALS", 1985.

ANY CLARIFICATION, REVISIONS, MODIFICATIONS THERETO SHALL ONLY BE MADE SUBJECT TO APPROVAL OF THE CITY OF SARATOGA SPRINGS PLANNING BOARD.

*A SUPER PLASTICIZER MAY BE USED TO INCREASE SLUMP AND WORKABILITY WITHOUT INCREASING THE WATER-CEMENT RATIO.

4 CONCRETE SPECIFICATIONS

N.T.S.

Plotted By: MATT BRIDSTON
Save Date: 11/16/2012 5:11:11 PM
File Name: G:\Projects\201178_West_Ave_246\2011\TRCAD\L7_DETS.dwg

NOTES:

EXPANSION JOINT SPACING – 20'-25' O.C.
CONTROL JOINT SPACING – 5' O.C.
NOMINAL CROSS SLOPE – 1/8" TO 1/4" PER FOOT (MAX. SLOPE 1:50 TYP.) TOWARDS STREET OR A.O.B.E. MAX. SLOPE ALONG THE LENGTH OF

THE WALK SHOULD NOT EXCEED 1:12
CONSTRUCTION JOINT DETAILS TO BE SUBMITTED AND APPROVED BY CITY ENGINEER SIDEWALK WIDTH TO BE 5' MIN. OR AS ORDERED BY CITY ENGINEER

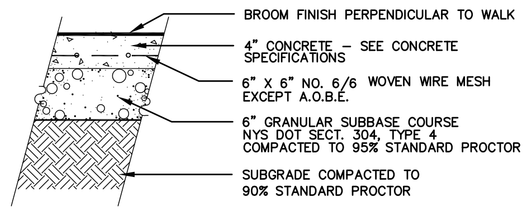

TYPICAL PEDESTRIAN LOADING

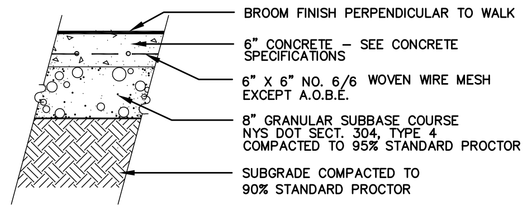

VEHICLE TRAFFIC LOADING

GENERAL DESIGN CRITERIA FOR CONSTRUCTING SIDEWALKS WITHIN SARATOGA SPRINGS RIGHT OF WAYS:

1.) SIDEWALKS MUST BE PLACED IN THE PUBLIC RIGHT OF WAY AT THE PROPERTY LINE.
2.) SIDEWALKS MUST NOT DROP DOWN WHEN CROSSING A DRIVEWAY.
3.) SIDEWALKS MUST NOT EXTEND ACROSS PUBLIC STREETS OR ALLEYS.

GENERAL DESIGN CRITERIA FOR CONSTRUCTING SIDEWALKS WITHIN SARATOGA COUNTY RIGHT OF WAYS WITHIN SARATOGA SPRINGS:

1.) ALL SIDEWALK INSTALLATIONS MUST BE DESIGNED BY A PROFESSIONAL ENGINEER. PLANS MUST BE APPROVED BY THE COUNTY COMM. OF PUBLIC WORKS.
2.) SIDEWALKS MUST BE PLACED ON THE BACK SIDE OF DITCHES OR 8'(MIN.) FROM THE EDGE OF SHOULDER.
3.) SIDEWALKS MUST BE CONSTRUCTED SO AS NOT TO INTERFERE WITH DRAINAGE.

5 CONCRETE PAVEMENT DETAIL

N.T.S.

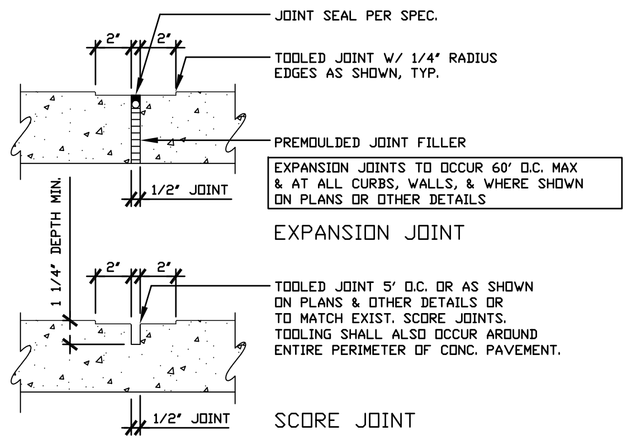

6 CONCRETE PVMT. EXPANSION SCORE JOINT DETAIL

N.T.S.

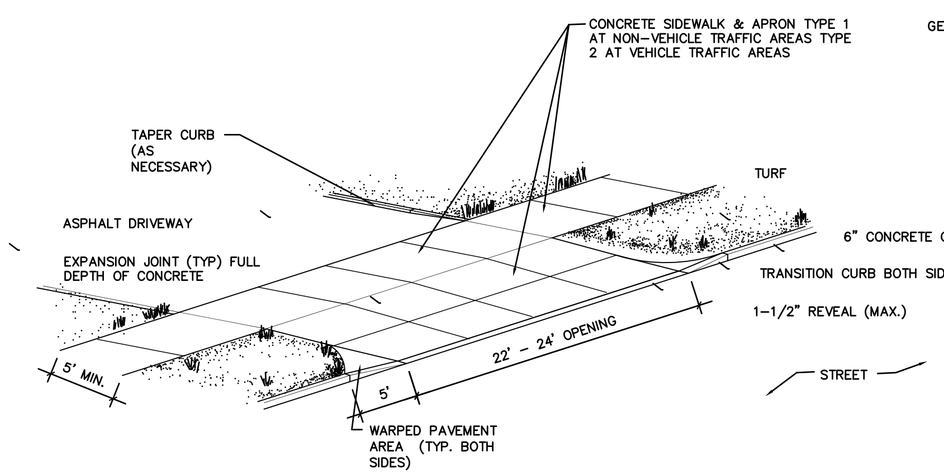

7 COMMERCIAL ENTRANCE DETAIL

N.T.S.

	TEXT	LETTER SIZE	LETTER TYPE	APPROX. SIZE OF SIGN	M.U.T.C.D. NO.
A	STOP	SEE M.U.T.C.D.		30"x30" 6.25 S.F.	R1-1C

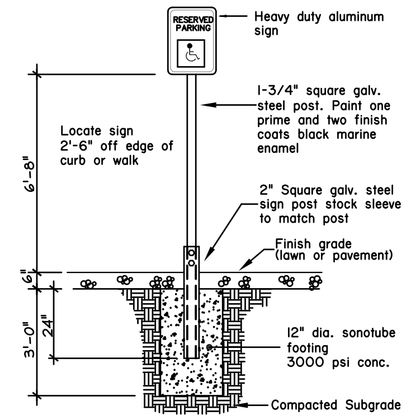

NOTE: OWNER TO APPROVE LOCATIONS PRIOR TO INSTALLATION.

SCHEDULE ELEVATION

8 TRAFFIC SIGN DETAIL / SIGN SCHEDULE

N.T.S.

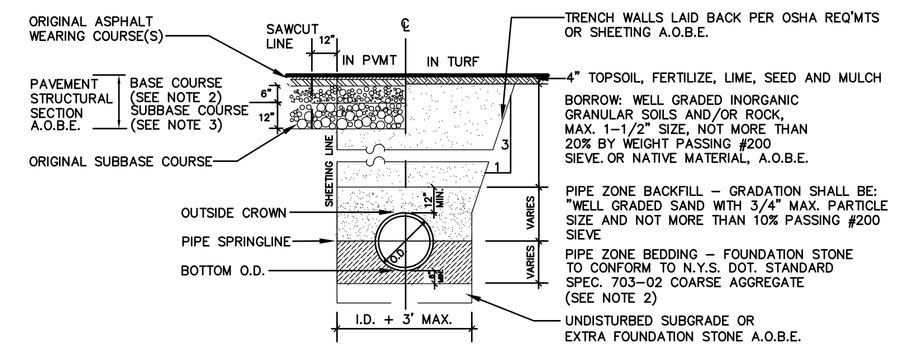

NOTES:

1. STREET OPENING PERMIT IS REQUIRED
2. FOUNDATION STONE – N.Y.S. DOT STD. SPEC. 703-02

   SIZE DETERMINATION #1: 100% PASSING 1" SIEVE, 90-100% PASSING 1/2" SIEVE, 0-15% PASSING 1/4" SIEVE

   OR

   SIZE DETERMINATION #2: 100% PASSING 1-1/2" SIEVE, 90-100% PASSING 1" SIEVE, 0-15% PASSING 1/2" SIEVE.

   GRADATION/SIZE DESIGNATION TO BE DETERMINED BY ENGINEER BASED ON FIELD CONDITIONS.

2. BASE COURSE FOR PAVEMENT: CONFORM TO N.Y.S. DOT STD. 703-02 WITH FOLLOWING MODIFICATIONS:

   2-1/2" SIEVE – PASS 100% BY WEIGHT
   1-3/4" SIEVE – PASS 95-100% BY WEIGHT
   3/4" SIEVE – PASS 60-75%
   1/4" SIEVE – PASS 25-45%
   #40 SIEVE – PASS 10-25%
   #100 SIEVE – PASS 3-12%

3. SUBBASE COURSE FOR PAVEMENT: CONFORM TO N.Y.S. DOT STD. 304-2, TYPE 4.
4. STRUCTURAL PAVEMENT SECTION SHOWN SHALL BE CONSTRUCTED IN LIEU OF PAVEMENT SECTION SHOWN ON DRAWING NO. P-4 A.O.B.E.

9 SANITARY PIPE TRENCH DETAIL

N.T.S.

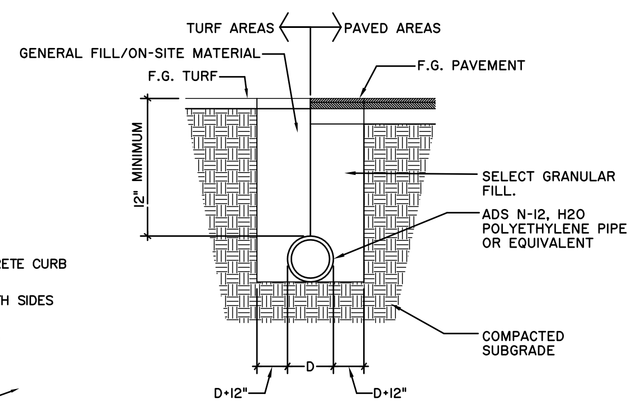

NOTE:
1. ADS N-12, HDPE PIPE REQUIRES A MINIMUM COVER OF 12" IN TRAFFIC AREAS AS PER MANUFACTURER'S SPECIFICATIONS. TO MEET AASHTO H-20 LOAD RATING.

10 PIPE TRENCH (STORM SYSTEM)

N.T.S.

Armor-Tile

Tactile Systems

ENGINEERED PLASTICS, INC.
300 INTERNATIONAL DR., SUITE 100
WILLIAMSVILLE, NY
USA, 14221
1 (800) 682-2525
PHONE: (716) 626-3626
FAX: 1 (800) 769-4463
www.armor-tile.com

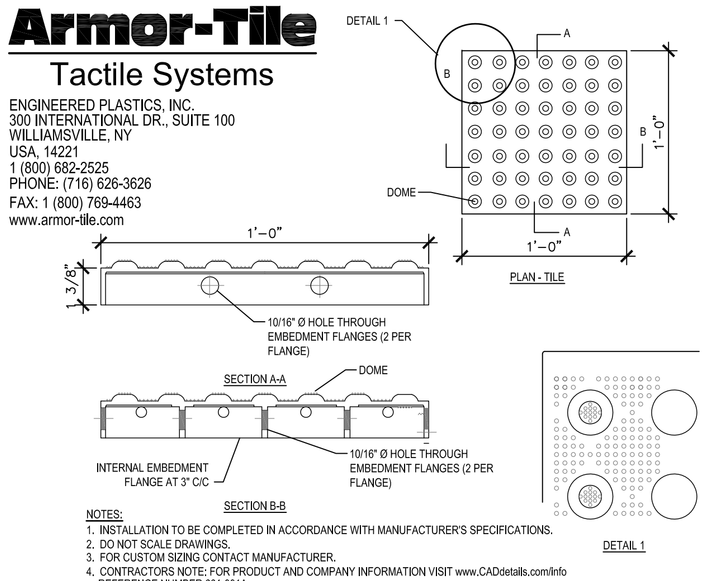

11 TACTILE WARNING STRIP

N.T.S.

12 UNIT PAVER WALKS

N.T.S.

Approval

Approved under authority of a resolution adopted _____ by the Planning Board of the City of Saratoga Springs.

_____ Chairperson

Date Signed _____

the LA group
Landscape Architecture and Engineering, PC
40 Long Alley
Saratoga Springs
New York 12866
P 518/587-8100
F 518/587-0180
www.thelagroup.com

Unauthorized alteration or addition to this document is a violation of Section 7209 of the New York State Education Law

© the LA Group 2008

Design MCB
Drawn MCB
Checked CMI

PREPARED FOR:
The PIKE Company, INC.
210 Clifton Corporate Parkway
Clifton Park, NY 12065

246 WEST AVENUE
RESIDENTIAL CONDOMINIUM COMPLEX
SARATOGA SPRINGS, NY

Title SITE DETAILS

Revisions
MYLAR CHECK SET 9/28/2012
MYLAR SET NOVEMBER 2012
May 2014

City #: 12.006.1
Project: 201178
Date: 1/25/2012

Drawing L-7

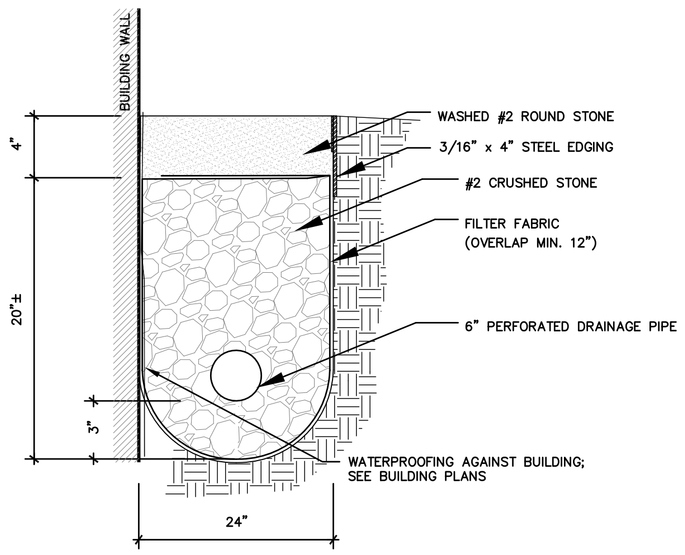

1 PERFORATED DRAINAGE TRENCH DETAIL

N.T.S.

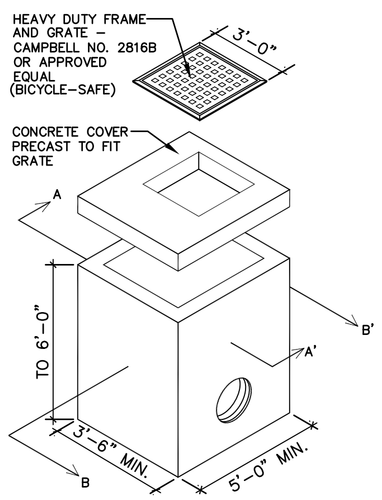

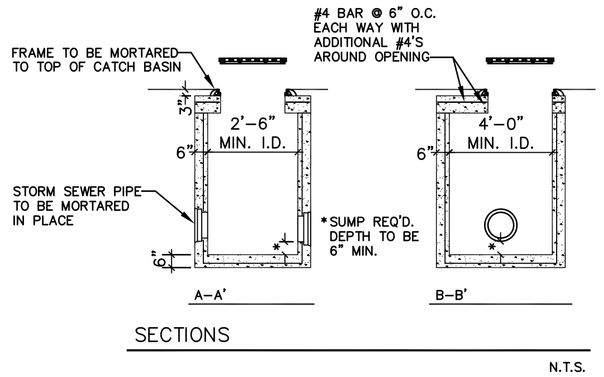

SECTIONS

N.T.S.

CONCRETE – 4000 PSI @ 28 DAYS
MIN. REINFORCMENT – 6x6 – 10/10 WWM
ALL FOUR SIDES AND BOTTOM
(CONFORM TO ASTM STD. A–615)

2 CATCH BASIN DETAIL

N.T.S.

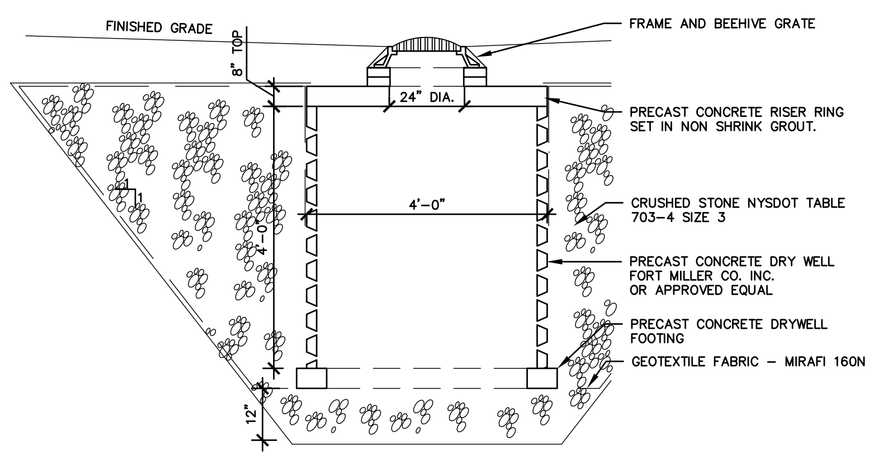

3 DRYWELL DETAIL

N.T.S.

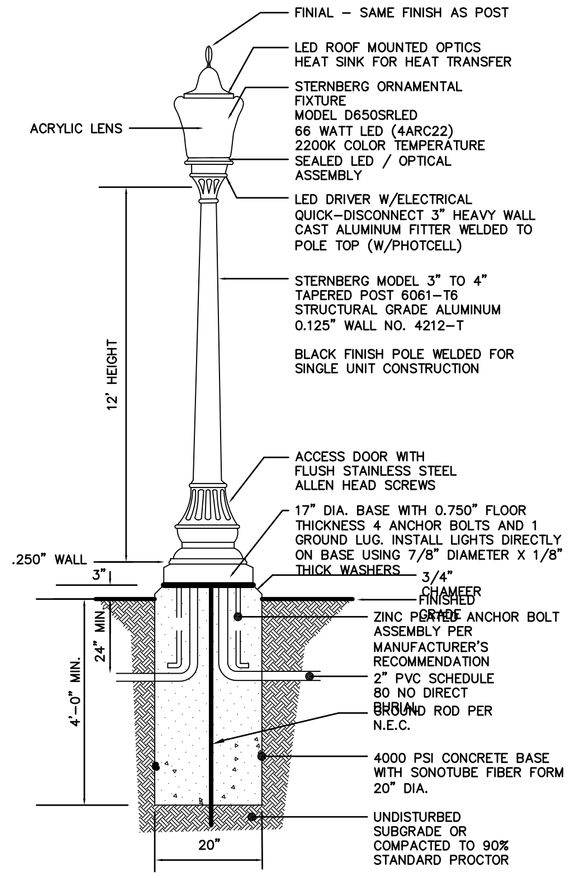

NOTES:

1. INSTALLATION OF DECORATIVE LIGHTS SHALL BE COORDINATED WITH THE CITY ELECTRICIAN AND DEPARTMENT OF PUBLIC WORKS. (USE 120V POWER)
2. THE OWNER/DEVELOPER IS RESPONSIBLE FOR ELECTRIFYING THE SYSTEM AND PAYING THE ELECTRIC BILLS UNTIL ACCEPTED AND TAKEN OVER BY THE CITY OF SARATOGA SPRINGS.
3. ELECTRIC SERVICE: SWEEPS AT CONCRETE BASES AND BETWEEN BASES USE 2" SCHEDULE 40 PVC NON–METALLIC CONDUIT, UNLESS UNDER DRIVEWAYS WHERE SCHEDULE 80 PVC IS REQUIRED. FOR WIRE: THHN COPPER STRANDED NUMBER 6 COLORED RED, WHITE, AND GREEN. LIGHTS ARE WIRED 120 VOLTS. PROVIDE A SEPARATE HANDHOLD, SYNERTECH SYN12121212HH02, TO BE OWNED BY THE CITY FOR THE DISCONNECT NEAR THE BASE OF THE ELECTRIC POLE OR BOX AT THE BEGINNING OF SERVICE. PROVIDE AND INSTALL (1) 5/8 INCH COPPER GROUND ROD IN HANDHOLE. WIRE AND CONDUIT FROM HANDHOLE TO POLE OR BOX PER NATIONAL GRIDS'S STANDARDS. IF CONNECTING ONLY ONE LIGHT PROVIDE WATERTIGHT FUSEHOLDER, FERRAZ SHAWMUT FEB–21–21 1P 600V WITH 5 AMP FUSE WITH INSULATOR BOOTS PART FRZ FSB1 IN HANDHOLE FOR FUSING THE POWER WIRE. IF CONNECTING MORE THAN ONE LIGHT PUT A 30 AMP FUSE IN WATERTIGHT FUSEHOLDER IN HANDHOLD AND PROVIDE SEPARATATE FUSE HOLDERS, BUSSMAN HEB–AA FUSEHOLDER WITH 5 AMP FUSE, IN BASE OF EACH LAMP. RUN #12 THHN COPPER, (RED WHITE AND GREEN) FROM BASE TO TOP OF LIGHT USE POLARIS CONNECTORS FOR CONNECTIONS IN HANDHOLE AND IN BASE OF LIGHTS. THE LIGHT IS TO BE MOUNTED DIRECTLY ONTO CONCRETE BASE USING FENDER WASHERS. 2 INCH OD 1/2 INCH ID AND 1/8 INCH THICKNESS AND LOCK WASHERS

4 DECORATIVE STREET LIGHT DETAIL

N.T.S.

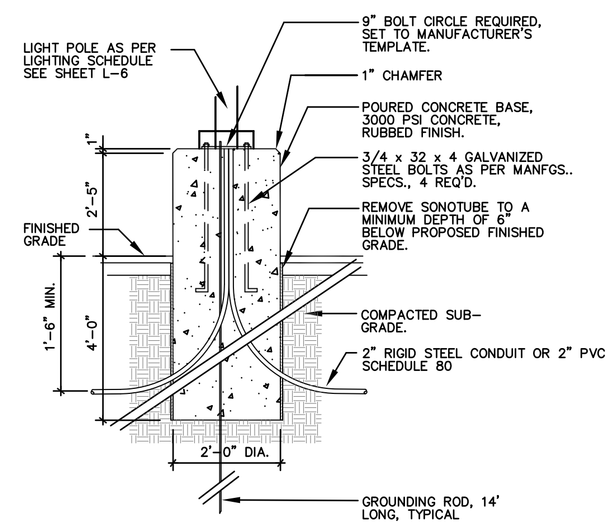

6 LIGHT POLE BASE – PEDESTAL DETAIL

N.T.S.

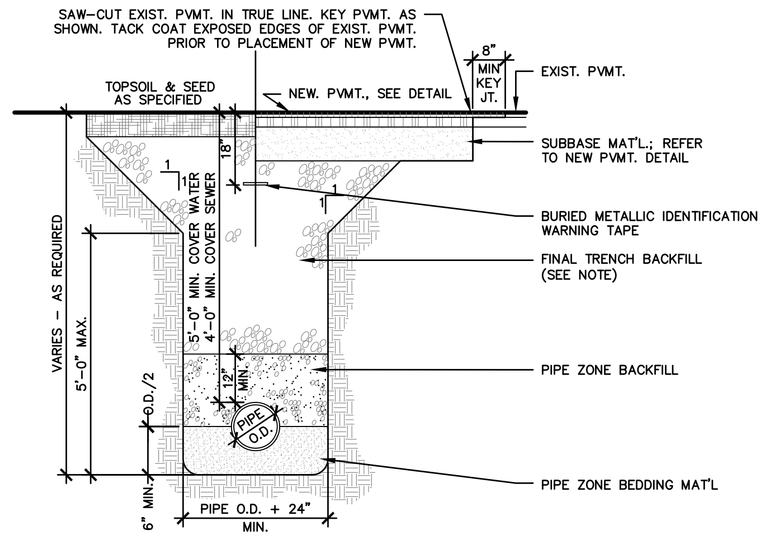

ITEM	DEPTH	MATERIAL	NYSDOT TYPE	METHOD OF PLACEMENT
PIPE ZONE BEDDING	6" MIN.	ANGULAR CRUSHED STONE	1&2	MECHANICAL COMPACTION
PIPE ZONE BACKFILL	12" MIN. COVER	CLEAN SAND OR GRAVEL	1A OR 1	MECHANICAL COMPACTION
FINAL TRENCH BACKFILL	VARIES	SEE NOTE	SEE NOTE	MECHNANICAL COMPACTION

NOTES:
1. FINAL TRENCH BACKFILL
   1.a. IN NON–PAVED AREAS, FINAL TRENCH BACKFILL SHALL BE EXCAVATED MATERIAL WHEN DETERMINED SUITABLE BY THE ENGINEER OF RECORD; OTHERWISE IT SHALL BE NYSDOT TYPE 1 (ITEM NO. 304.02). MIN. MOD. PROCTOR DENSITY SHALL BE 85 PERCENT.
   1.b. IN PAVED AREAS, FINAL TRENCH BACKFILL SHALL BE NYSDOT TYPE 1 (ITEM NO. 304.02). MIN. MODIFIED PROCTOR DENSITY SHALL BE 95 PERCENT.
2. ALL PIPE ZONE BEDDING, PIPE ZONE BACKFILL, AND FINAL TRENCH BACKFILL SHALL BE PLACED IN 6 INCH MAX. COMPACTED LIFTS. ALL BEDDING AND BACKFILL MATERIALS SHALL BE MECHANICALLY COMPACTED TO THE SATISFACTION OF THE ENGINEER.
3. EXCAVATION SHALL BE KEPT DRY AND DEWATERED AT ALL TIMES.

7 PIPE TRENCH-SECTION

SCALE: NTS

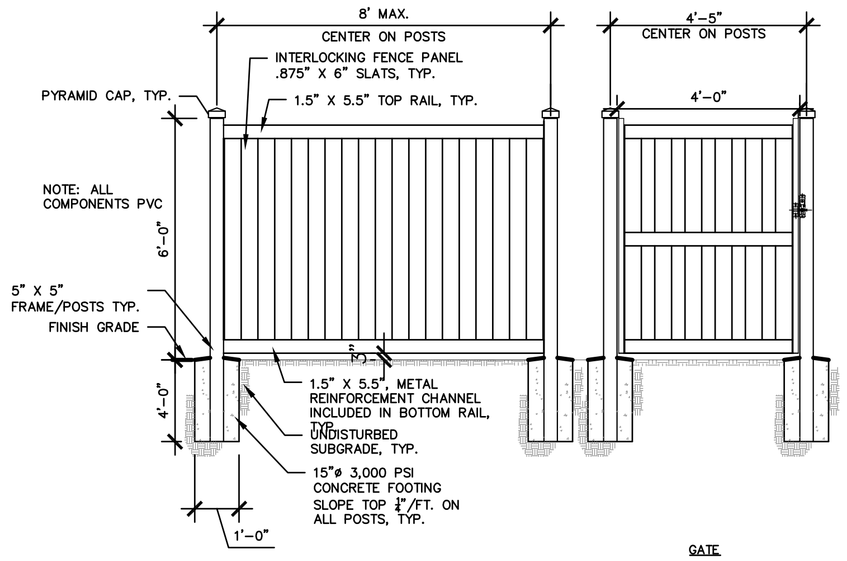

8 DUMPSTER PAD ENCLOSURE

SCALE: NTS

Approval

Approved under authority of a resolution adopted
by the Planning Board of the City of Saratoga Springs.

Chairperson

Date Signed

the LA group
Landscape Architecture
and Engineering, PC
40 Long Alley
Saratoga Springs
New York 12866
P 518/587-8100
F 518/587-0180
www.thelagroup.com

Unauthorized alteration or addition to this document is a violation of Section 7209 of the New York State Education Law

© the LA Group 2008

Design MCB
Drawn MCB
Checked CMI

PREPARED FOR:
John-Paul Builders, LLC
796 Burdeck Street
Schenectady, NY 12306

246 WEST AVENUE APARTMENTS

SARATOGA SPRINGS, NY

Title SITE DETAILS

Revisions

City #:
Project: 201178
Date: 6/23/2016

Drawing L-8

Plotted By: MATT BRIDBSTON
Save Date: 6/23/2016 10:10 AM
File Name: G:\Projects\1501\15_West_Ave_246\2015TRCADs\J-7_DETS.dwg

NOTES:

MAINS SHALL BE VALVED TO INSURE THAT WATER FLOW IS NOT INTERRUPTED TO MORE THAN TWO HYDRANTS AT ANY GIVEN TIME.

ALL HYDRANTS AND VALVES SHALL OPEN RIGHT.

PAINT SCHEDULE:

SIZE OF MAIN	COLOR OF BONNET AND CONNECTOR COVERS	COLOR OF BARREL
6"	BLUE	YELLOW
8"	GREEN, FOREST	YELLOW
10"	BROWN	YELLOW
12"	GRAY, BATTLESHIP	YELLOW
14"	GREEN, LIGHT	YELLOW
16"	ORANGE	YELLOW
20"	BLACK	YELLOW
24"	YELLOW	YELLOW

1 FIRE HYDRANT DETAIL

N.T.S.

NOTE:
RETAINING GLANDS ACCEPTABLE FOR USE AS APPROVED BY CITY ENGINEER.

NOTES:
1. FOR REQUIRED BEARING AREA AND DIMENSIONS L & D, SEE SCHEDULE BELOW. VALUES OF L & D OTHER THAN THOSE SHOWN IN THE TABLE MAY BE USED PROVIDED THEY YIELD A BEARING AREA EQUAL TO OR LARGER THAN REQUIRED.
2. CONC. NOT TO OVERLAP ANY JOINT.
3. CONCRETE TO BE PLACED SO AS NOT TO INTERFERE W/ REMOVING OR INSTALLING ANY OF THE JOINTING HARDWARE.
4. BEARING AREAS FOR THRUST BLOCKS FOR WATER MAINS LARGER THAN 12" DIA. TO BE APPROVED BY CITY ENGINEER.
5. APPROXIMATE VOLUME OF CONCRETE THRUST BLOCK:

$$V\pm = \frac{LD\,(W + I.D.) - I.D.}{81}$$

WHERE:
V = VOLUME IN CUBIC YARDS
L = LENGTH OF BLOCK IN FEET
D = DEPTH OF BLOCK IN FEET
W = WIDTH OF BLOCK IN FEET
I.D. = INSIDE DIAMETER OF PIPE IN FEET

6. REQUIRED BEARING AREAS ARE BASED ON ALLOWABLE SOIL BEARING CAPACITY OF 2000 p.s.i. W/ A SAFETY FACTOR OF 1.7. PRESSURE OF FLUID FLOW IS BASED ON A 300' HEAD.
7. IN MUCK, PEAT OR RECENTLY PLACED FILL ALL THRUST SHALL BE RESISTED BY PILES OR TIE RODS TO SOLID FOUNDATIONS, OR BY REMOVAL OR SUCH UNSTABLE MATERIAL & REPLACEMENT W/ BALLAST OF SUFFICIENT STABILITY TO RESIST THRUSTS, ALL AS REQUIRED BY THE ENGINEER.

REQUIRED BEARING AREAS & DIMENSIONS FOR CONCRETE THRUST BLOCKS

PIPE SIZE INCHES	TEE AREA SQ. FT.	TEE DIMENSIONS D x L	90° (1/4) BEND AREA SQ. FT.	90° (1/4) BEND DIMENSIONS D x L	45° (1/8) BEND AREA SQ. FT.	45° (1/8) BEND DIMENSIONS D x L	22-1/2° (1/16) BEND AREA SQ. FT.	22-1/2° (1/16) BEND DIMENSIONS D x L	11-1/4° (1/32) BEND AREA SQ. FT.	11-1/4° (1/32) BEND DIMENSIONS D x L
6	4.21	1.8 x 2.5	5.96	2.0 x 3.0	3.22	1.5 x 2.3	1.65	1.3 x 1.5	0.83	0.83 x 1.3
8	7.24	2.5 x 3.0	10.24	2.8 x 3.8	5.54	2.3 x 2.5	2.82	1.5 x 1.5	1.42	1.0 x 1.5
10	10.89	2.8 x 4.0	15.40	3.3 x 4.8	8.33	2.5 x 3.5	4.25	1.8 X 2.5	2.14	1.3 x 2.0
12	12.40	3.5 x 4.5	21.77	4.5 x 5.0	11.78	3.0 x 4.0	6.01	2.3 x 2.8	3.02	1.5 x 2.3
16	26.75	4.8 x 5.8	37.83	5.8 x 6.8	20.48	4.0 x 5.3	10.44	2.8 x 4.0	5.25	2.3 x 2.5

NOTES:
1. VALUES FOR TEES APPLY TO TEES, END PLUGS, CAPS, AND TAPPING SLEEVES.
2. MINIMUM REQUIRED BEARING AREAS ARE DUE TO THRUSTS CAUSED BY 150 P.S.I. WORKING PRESSURE PLUS 50% (75 P.S.I) SURGE ALLOWANCE RESULTING IN 225 P.S.I. INTERNAL PRESSURE.
3. REQUIRED BEARING AREAS ARE BASED ON ALLOWABLE SOIL BEARING CAPACITY OF 2000 POUNDS PER SQUARE FOOT FOR SAND. DUE TO OTHER SOIL CONDITIONS WHICH MAY BE ENCOUNTED DURING THE WORK, THRUST BLOCK BEARING AREAS MAY BE MODIFIED BY THE ENGINEER OF RECORD BY MULTIPLYING THE MINIMUM REQUIRED BEARING AREA GIVEN IN THE TABLE ABOVE FOR THE APPROPRIATE PIPE SIZE AND FITTING BY THE CORRECTION FACTORS BELOW. THE CONTRACTOR SHALL NOTIFY THE ENGINEER CONCERNING ENCOUNTERED SOIL CONDITIONS WHICH ARE NOT SAND. THE CONTRACTOR SHALL NOT MODIFY THE REQUIRED THRUST BLOCK SIZES WITHOUT THE ENGINEER'S WRITTEN APPROVAL.

INSITU SOIL CONDITION	ALLOWABLE SOIL PRESSURE (LBS./SQ.FT.)	CORRECTION FACTOR
SOFT CLAY	1000	2.00
SAND	2000	1.00
SAND & GRAVEL	3000	0.67
CEMENTED W/CLAY	4000	0.50
HARD SHALE	10,000	0.20

4. IN MUCK, PEAT, OR RECENTLY PLACED FILL ALL THRUSTS SHALL BE RESISTED BY STEEL PILES OR TIE ROD ANCHORAGE TO SOLID APPROVED FOUNDATIONS, OR BY REMOVAL OF SUCH UNSTABLE MATERIAL AND REPLACEMENT WITH BALLAST OF SUFFICIENT STABILITY TO RESIST THE THRUSTS, ALL AS REQUIRED BY THE ENGINEER. ALL PROPOSED PILE CONFIGURATIONS THE CONTRACTOR WISHES TO UTILIZE IN THE WORK SHALL BE DESIGNED AND CERTIFIED BY A QUALIFIED NEW YORK STATE LICENSED PROFESSIONAL ENGINEER HIRED BY THE CONTRACTOR. THE COST OF SAID PROFESSIONAL ENGINEERING SERVICES SHALL BE PAID BY THE CONTRACTOR AT NO ADDITIONAL COST TO THE OWNER. ALL PILE CONFIGURATIONS AND RESPECTIVE ENGINEERING COMPUTATIONS (AND ANY OTHER SUPPORTING DOCUMENTATION AS DEEMED NECESSARY BY THE ENGINEER OF RECORD), AS PROPOSED BY THE CONTRACTOR, SHALL BE SUBMITTED TO THE ENGINEER OF RECORD FOR CONTENT REVIEW AND COMMENT; ALL SUBMITTALS SHALL DEPICT A SIGNED AND DATED LICENSED PROFESSIONAL ENGINEER'S SEAL BELONGING TO THE ENGINEER HIRED BY THE CONTRACTOR.
5. ALL CAST-IN-PLACE CONCRETE THRUST BLOCKS SHALL BE CONSTRUCTED OF 3,000 PSI MINIMUM CONCRETE HAVING A MAXIMUM WATER-TO-CEMENT RATIO OF 0.44, A MINIMUM CEMENT CONTENT OF 630 POUNDS PER CUBIC YARD AND A MAXIMUM SLUMP OF 4 INCHES AT POINT OF PLACEMENT. ALL CONCRETE THRUST BLOCKS SHALL BEAR AGAINST UNEXCAVATED/UNDISTURBED VIRGIN SOIL OF THE PIPE TRENCH VERTICAL WALL. ALL THRUST BLOCK BEARING AREAS SHALL BE BASED ON THE ACTUAL CONTACT AREA OF THE THRUST BLOCK AGAINST THE VERTICAL TRENCH FACE; CONTACT AREAS OF THRUST BLOCKS AGAINST SLOPED TRENCH WALL FACES WILL NOT UTILIZED IN COMPUTING CONTACT AREAS.
6. CONCRETE UTILIZED FOR CONSTRUCTING THRUST BLOCKS SHALL NOT OVERLAP ANY PIPE JOINT, FITTING/PIPE JOINT, MECHANICAL JOINT RETAINER GLAND AND FERROUS-BASED RESTRAINT ANCHORAGE ASSEMBLIES.
7. CONCRETE THRUST BLOCKS SHALL BE PLACED IN SUCH A MANNER SO AS NOT TO INTERFERE WITH ANY FUTURE REMOVAL AND/OR MAINTENANCE OF FITTING RESTRAINT HARDWARE. ALL PIPE FITTINGS RECEIVING CONCRETE THRUST BLOCKS SHALL BE WRAPPED WITH 6-MIL MINIMUM POLYETHALENE PLASTIC SHEETS TO PREVENT CONCRETE BONDING TO FERROUS FITTINGS AND RESTRAINT HARDWARE.
8. CONCRETE THRUST BLOCKS SHALL BE PLACED IN SUCH A MANNER SO AS NOT TO BEAR UPON NEW AND EXISTING CONSTRUCTIONS, AND ANY AND ALL UNDERGROUND UTILITIES WHICH MAY OR MAY NOT BE IMPACTED UPON DUE TO IMPARTED WATER MAIN THRUSTS; NO THRUST BLOCK SHALL BE PLACED WHEN THERE IS NOT AT LEAST A 10 FOOT MINIMUM SEPARATION BETWEEN THE REAR OF THE THRUST BLOCK AND AN EXISTING UNDERGROUND UTILITY, UNLESS WRITTEN APPROVAL IS RECEIVED FROM BOTH THE UTILITY OWNER AND THE ENGINEER.

2 THRUST BLOCK DETAILS/NOTES

N.T.S.

NOTE:
(REFERENCE- "TEN STATE STANDARDS")
WHEN INSTALLED PARALLEL, ALL WATER AND SEWER LINES SHALL HAVE A MINIMUM SEPARATION OF 10', EDGE TO EDGE. IF MINIMUM CANNOT BE MAINTAINED, WATER MAIN SHALL BE IN SEPARATE TRENCH OR ON AN UNDISTURBED EARTH SHELF TO ONE SIDE OF SEWER, WITH BOTTOM OF WATER MAIN 18" MINIMUM ABOVE TOP OF SEWER PIPE. WHEN CROSSING, MAINS SHALL BE INSTALLED TO INSURE 18" MINIMUM VERTICAL SEPARATION BETWEEN PIPES, OUTSIDE TO OUTSIDE. WHERE WATER MAIN IS UNDERNEATH SEWER, ADEQUATE STRUCTURAL SUPPORT SHALL BE PROVIDED FOR THE SEWER TO PREVENT DAMAGE TO WATER MAIN. WHEN IT IS IMPOSSIBLE TO PROVIDE THE ABOVE MINIMUMS, THE SEWER SHALL BE DESIGNED AND CONSTRUCTED EQUAL TO WATER PIPE, AND SHALL BE PRESSURE TESTED TO ASSURE WATERTIGHTNESS PRIOR TO BACKFILLING.

3 UTILITY CROSSING DETAIL

N.T.S.

4 CONN. TO EXISTING WATER MAIN DETAIL

N.T.S.

5 NEW WATER MAIN VALVE INSTALLATION DETAIL

N.T.S.

Approval

Approved under authority of a resolution adopted ______ by the Planning Board of the City of Saratoga Springs.
______ Chairperson
Date Signed ______

the LA group
Landscape Architecture and Engineering, PC
40 Long Alley
Saratoga Springs
New York 12866
P 518/587-8100
F 518/587-0180
www.thelagroup.com

Unauthorized alteration or addition to this document is a violation of Section 7209 of the New York State Education Law

© the LA Group 2008

Design MCB
Drawn MCB
Checked CMI

PREPARED FOR:
The PIKE Company, INC.
210 Clifton Corporate Parkway
Clifton Park, NY 12065

246 WEST AVENUE
RESIDENTIAL CONDOMINIUM COMPLEX
SARATOGA SPRINGS, NY
Title
SITE DETAILS

Revisions
MYLAR CHECK SET 9/28/2012
MYLAR SET NOVEMBER 2012
May 2014

City #: 12.006.1
Project: 201178
Date: 1/25/2012

Drawing
L-9

Plotted By: MATT BROBSTON
Save Date: 11/16/2012 5:11 PM
File Name: G:\Proj-2011\201178_West_Ave_246\201178CAD\L-7_DETS.dwg

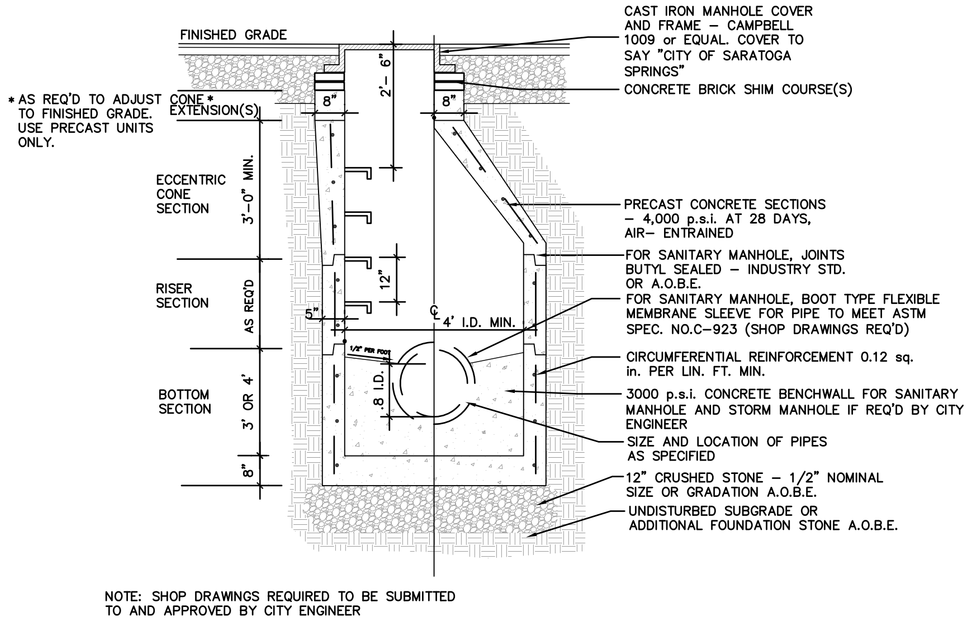

NOTE: SHOP DRAWINGS REQUIRED TO BE SUBMITTED TO AND APPROVED BY CITY ENGINEER

1 SANITARY SEWER MANHOLE DETAIL

N.T.S.

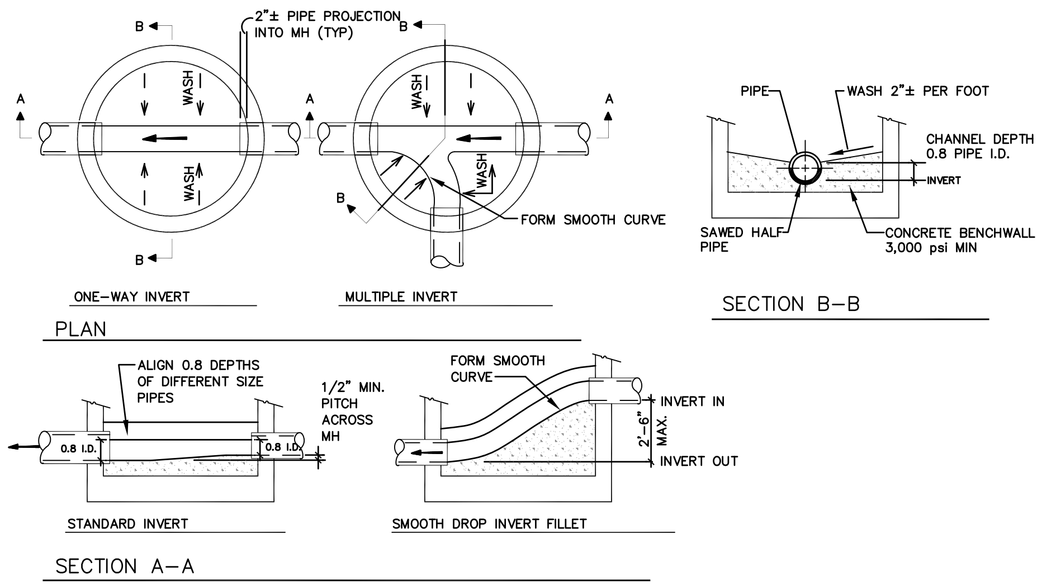

2 MANHOLE BENCH DETAIL

N.T.S.

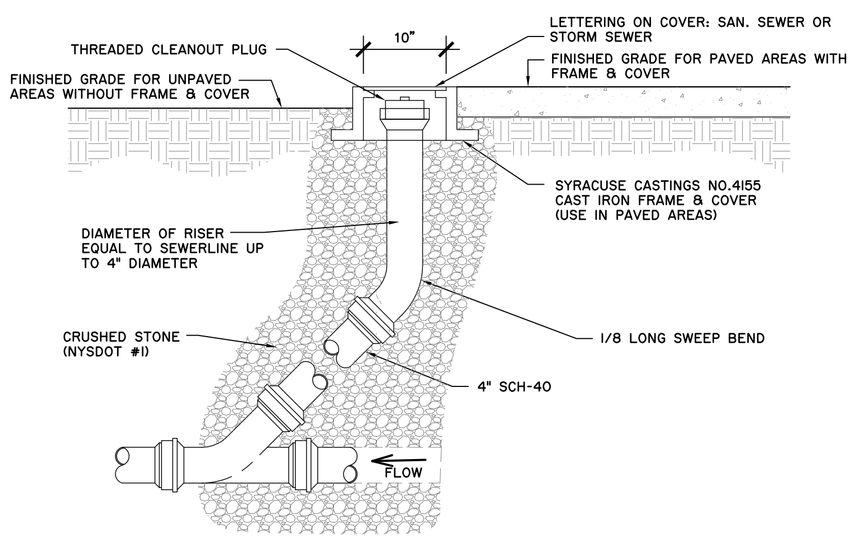

3 SANITARY SEWER CLEANOUT DETAIL

N.T.S.

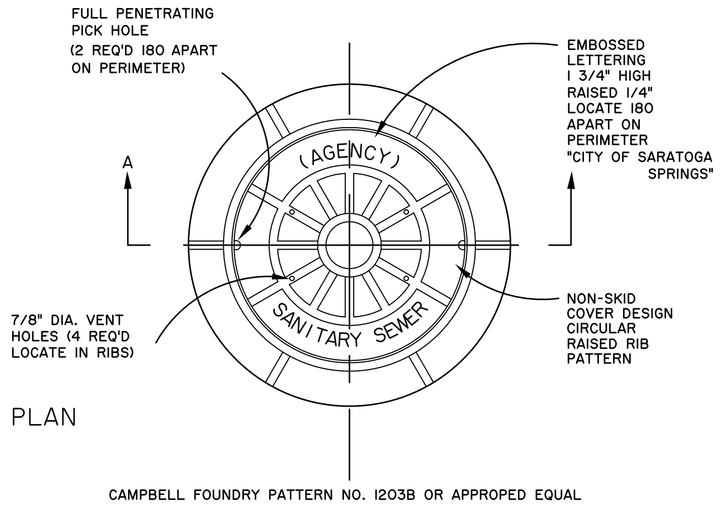

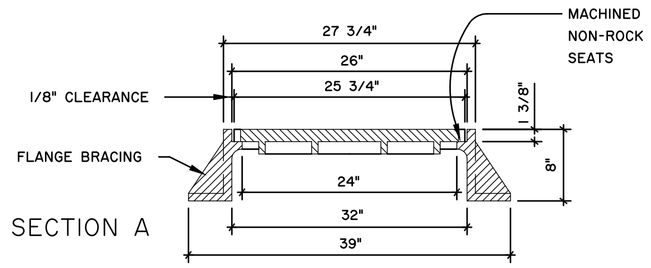

NOTE:
1) FRAME AND COVER SHALL CONFORM TO A.S.T.M. A536 (DUCTILE IRON) AND SAFELY WITHSTAND A.A.S.H.T.O. H520-44 HIGHWAY LOADING
2) FRAME AND COVER SHALL RECEIVE FACTORY APPLIED BITMASTIC COATING

4 SANITARY MANHOLE FRAME AND COVER DETAIL

N.T.S.

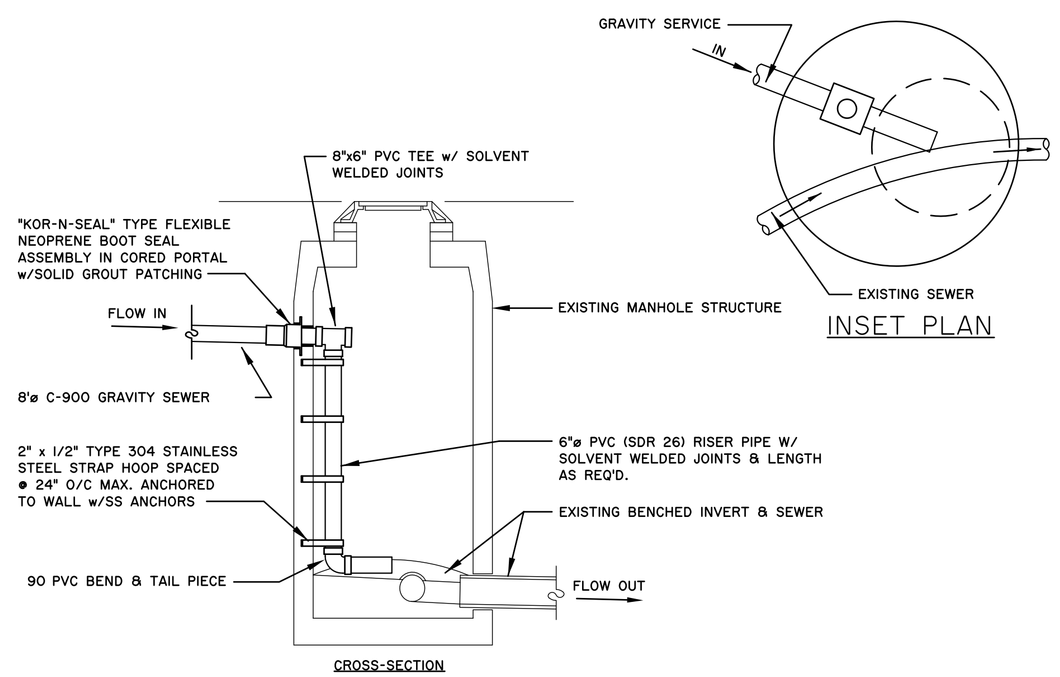

NOTES:
1) WORK EXCAVATION SHALL BE KEPT DRY AND DEWATERED AT ALL TIMES
2) EXCAVATION, BACKFILL, AND RESTORATION WITHIN HIGHWAY R.O.W. IN ACCORDANCE WITH NYSDOT SPECIFICATIONS
3) CONNECTION MATERIALS & METHODS IN ACCORDANCE WITH S.C.S.D. #1 SPECIFICATIONS.

5 SANITARY DROP @ EXISTING MANHOLE

N.T.S.

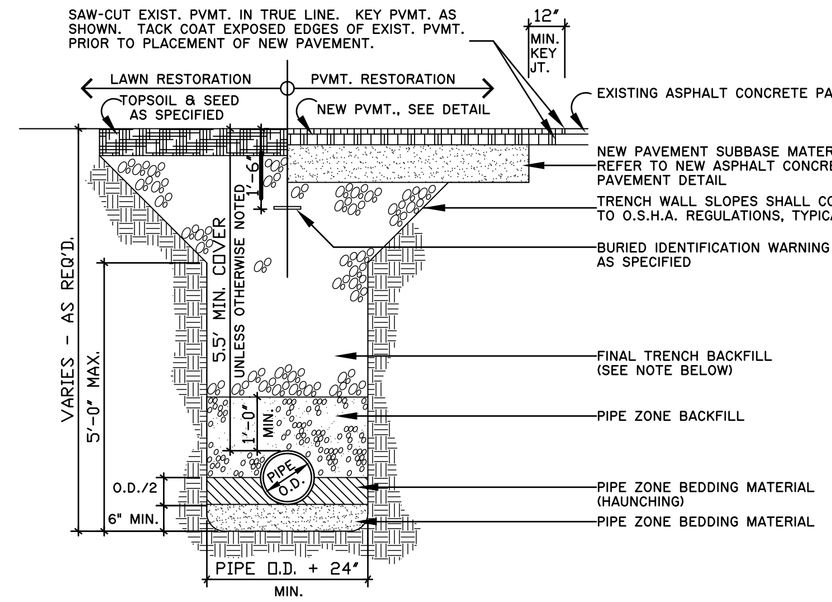

ITEM	DEPTH	MATERIAL	NYSDOT TYPE AGGREGATE	METHOD OF PLACEMENT
PIPE ZONE BEDDING (ENCOUNTERED DRY COND.)	6" MIN.	CRUSHED STONE	1	MECHANICAL COMPACTION
PIPE ZONE BEDDING (HAUNCHING/ ENCOUNTERED WET CONDITION)	6" MIN.	CRUSHED STONE	2	MECHANICAL COMPACTION
PIPE ZONE BEDDING (HAUNCHING)	PIPE O.D./2	CRUSHED STONE	1	MECHANICAL COMPACTION
PIPE ZONE BACKFILL	12" MIN. COVER	CRUSHED STONE	1	MECHANICAL COMPACTION
FINAL TRENCH BACKFILL	VARIES	SEE NOTE	SEE NOTE	MECHNANICAL COMPACTION

NOTES:
1) FINAL TRENCH BACKFILL
   a) IN NON-PAVED AREAS, FINAL TRENCH BACKFILL SHALL BE EXCAVATED MATERIAL WHEN DETERMINED SUITABLE BY THE ENGINEER OF RECORD, OTHERWISE IT SHALL BE NYSDOT TYPE 1 (ITEM NO. 304.02). MIN. MOD. PROCTOR DENSITY SHALL BE 90 PERCENT.
   b) IN PAVED AREAS, FINAL TRENCH BACKFILL SHALL BE NYSDOT TYPE 2 (ITEM NO. 304.03). MIN. MODIFIED PROCTOR DENSITY SHALL BE 95 PERCENT.
2) ALL PIPE ZONE BEDDING, PIPE ZONE BACKFILL, AND FINAL TRENCH BACKFILL SHALL BE PLACED IN 6 INCH MAXIMUM, COMPACTED LIFTS. ALL BEDDING AND BACKFILL MATERIALS SHALL BE MECHANICALLY COMPACTED TO THE SATISFACTION OF THE ENGINEER.
3) EXCAVATION SHALL BE KEPT DRY AND DEWATERED AT ALL TIMES DURING TRENCHING OPERATIONS.
4) ALL PAVEMENT SAWCUTS SHALL BE IN SOUND EXISTING PAVEMENT ACCEPTABLE TO THE ENGINEER.

6 TYPICAL WATER PIPE TRENCH DETAIL

N.T.S.

Approval

Approved under authority of a resolution adopted _____ by the Planning Board of the City of Saratoga Springs.

_____ Chairperson

Date Signed _____

the LA group
Landscape Architecture and Engineering, PC
40 Long Alley
Saratoga Springs
New York 12866
P 518/587-8100
F 518/587-0180
www.thelagroup.com

Unauthorized alteration or addition to this document is a violation of Section 7209 of the New York State Education Law

© the LA Group 2008

Design MCB
Drawn MCB
Checked CMI

PREPARED FOR:
The PIKE Company, INC.
210 Clifton Corporate Parkway
Clifton Park, NY 12065

246 WEST AVENUE
RESIDENTIAL CONDOMINIUM COMPLEX
SARATOGA SPRINGS, NY

Title
SITE DETAILS

Revisions
MYLAR CHECK SET 9/28/2012
MYLAR SET NOVEMBER 2012
May 2014

City #: 12.006.1
Project: 201178
Date: 1/25/2012

Drawing
L-10

Plotted By: MATT BRIDGETON
Save Date: 11/19/2012 5:11 PM
File Name: G:\PROJECTS\201178_West_Ave_246\2011780ADfs\7_DETS.dwg

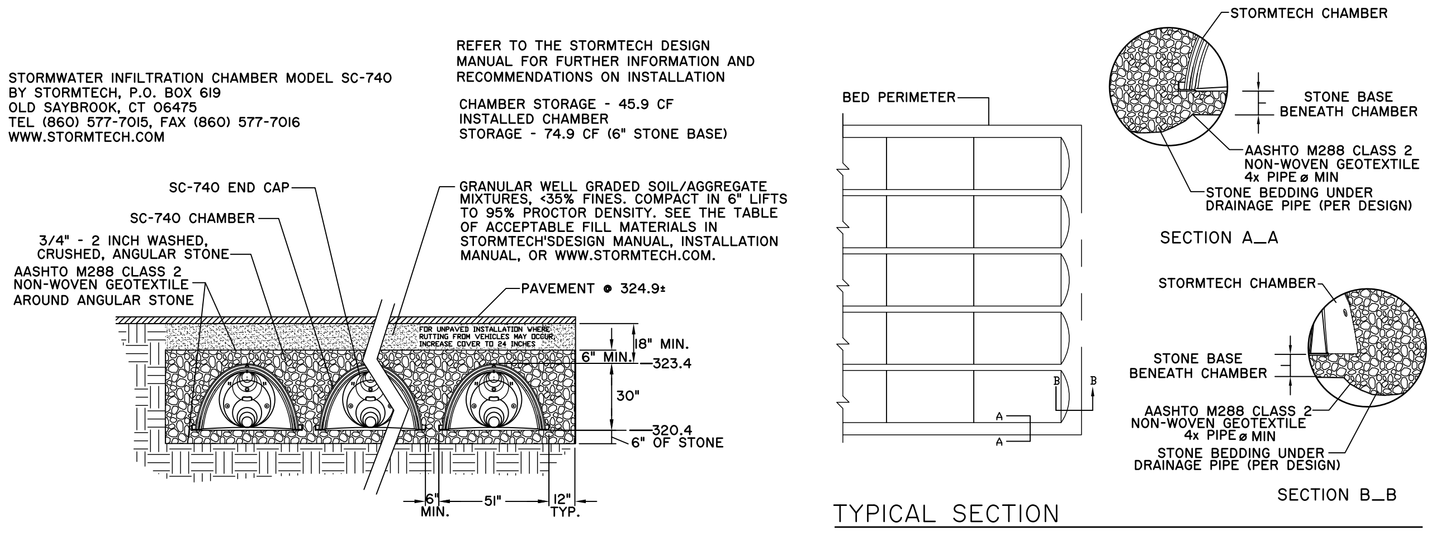

1 STORMWATER INFILTRATION CHAMBER DETAIL

N.T.S.

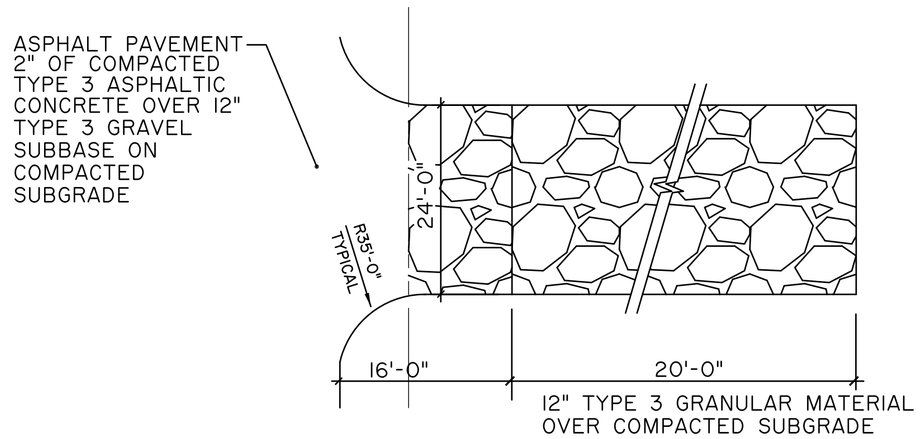

2 STABILIZED CONSTRUCTION ACCESS

N.T.S.

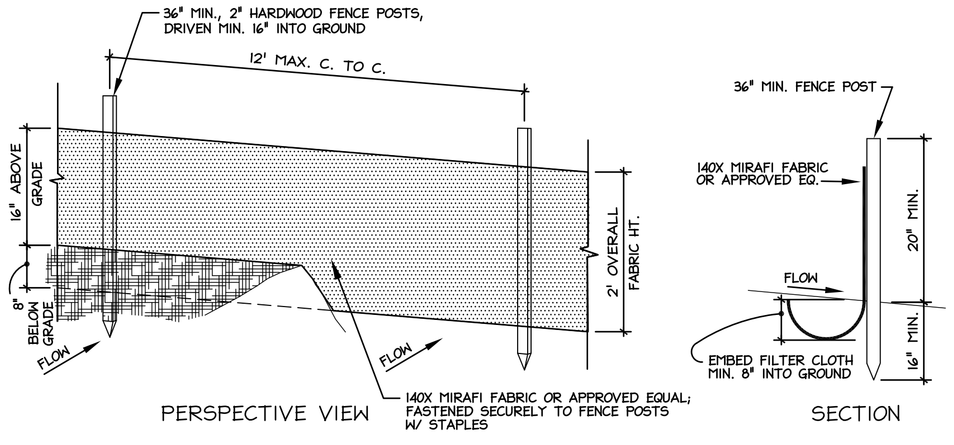

3 SILT FENCE DETAIL

N.T.S.

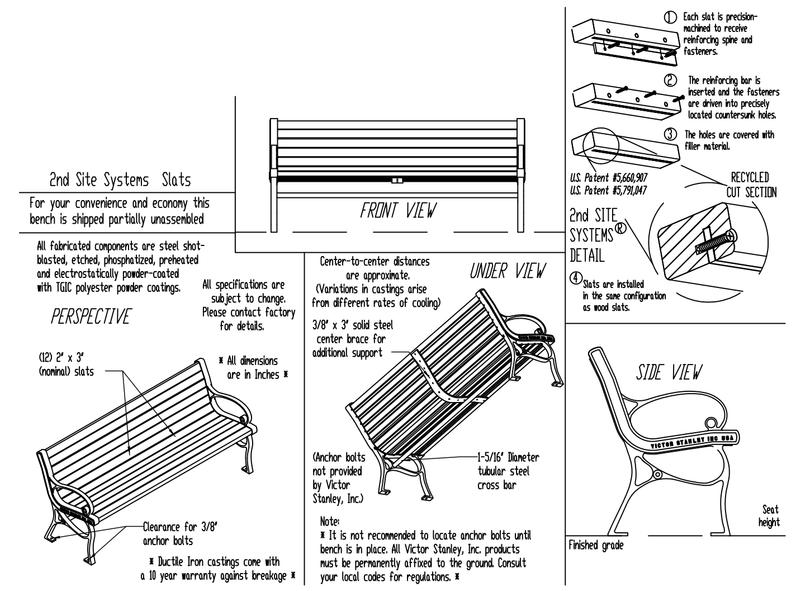

4 6' BENCH DETAIL

N.T.S.

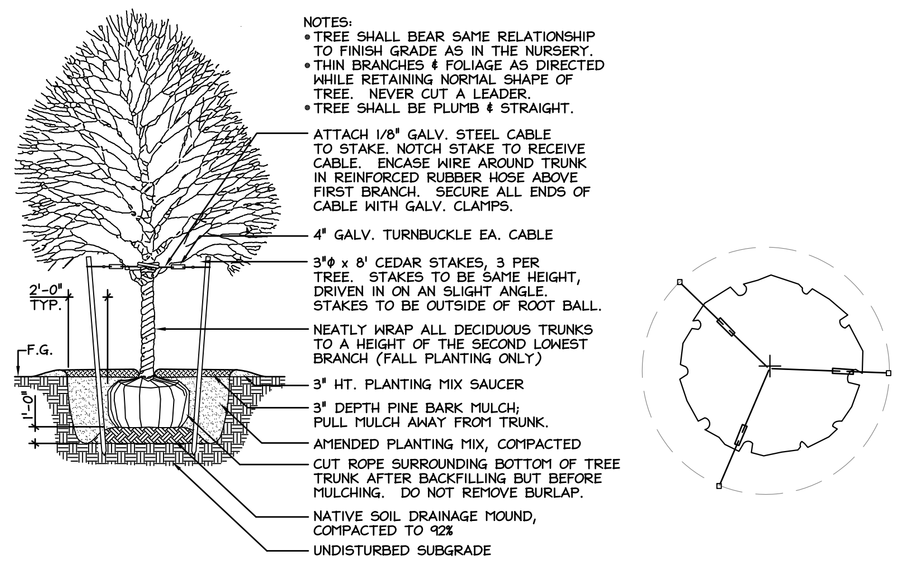

5 DECIDUOUS TREE PLANTING

SCALE: NTS

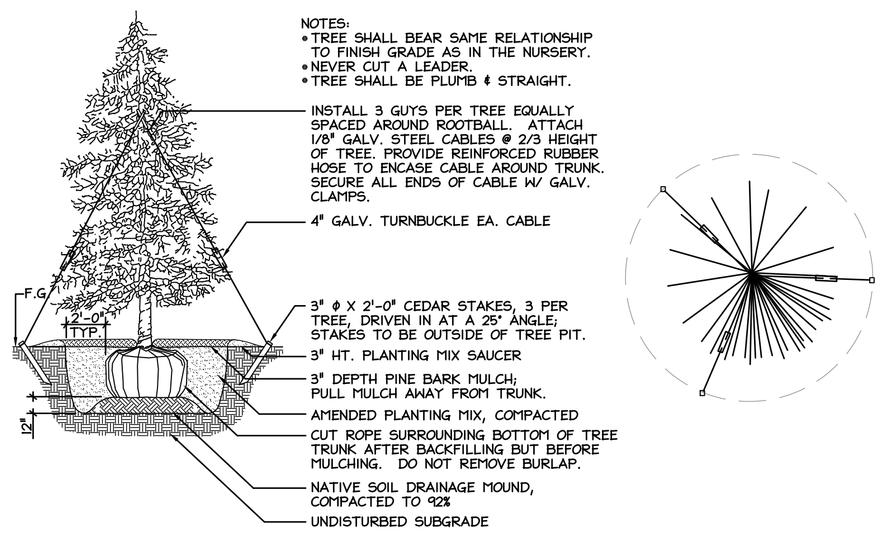

6 EVERGREEN TREE PLANTING

SCALE: NTS

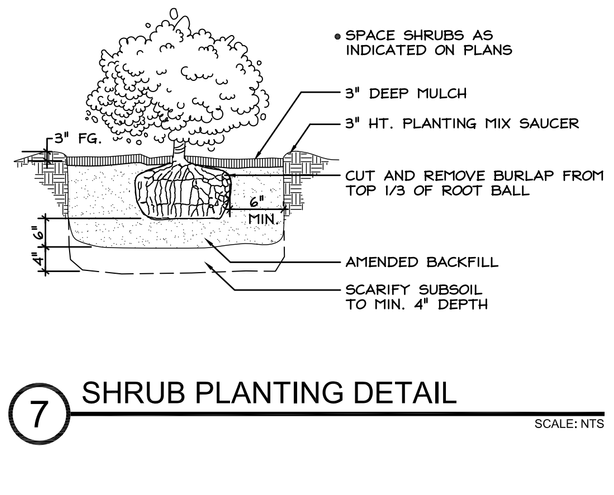

7 SHRUB PLANTING DETAIL

SCALE: NTS

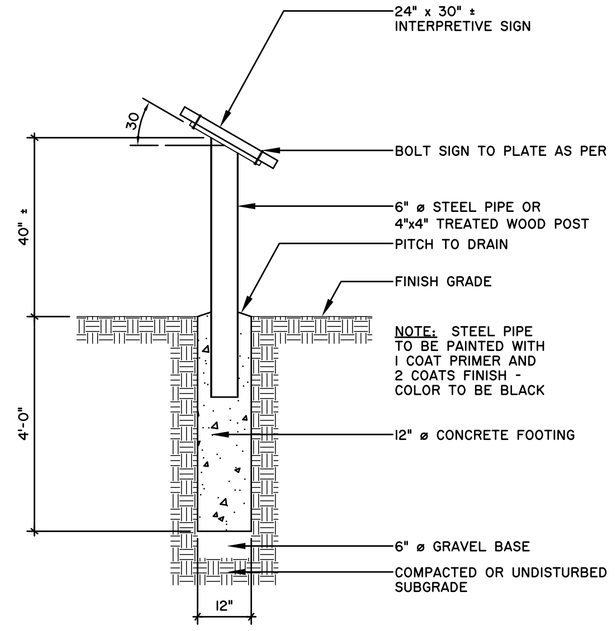

8 INTERPRETIVE SIGN DETAIL

SCALE: 1/2" = 1'-0"

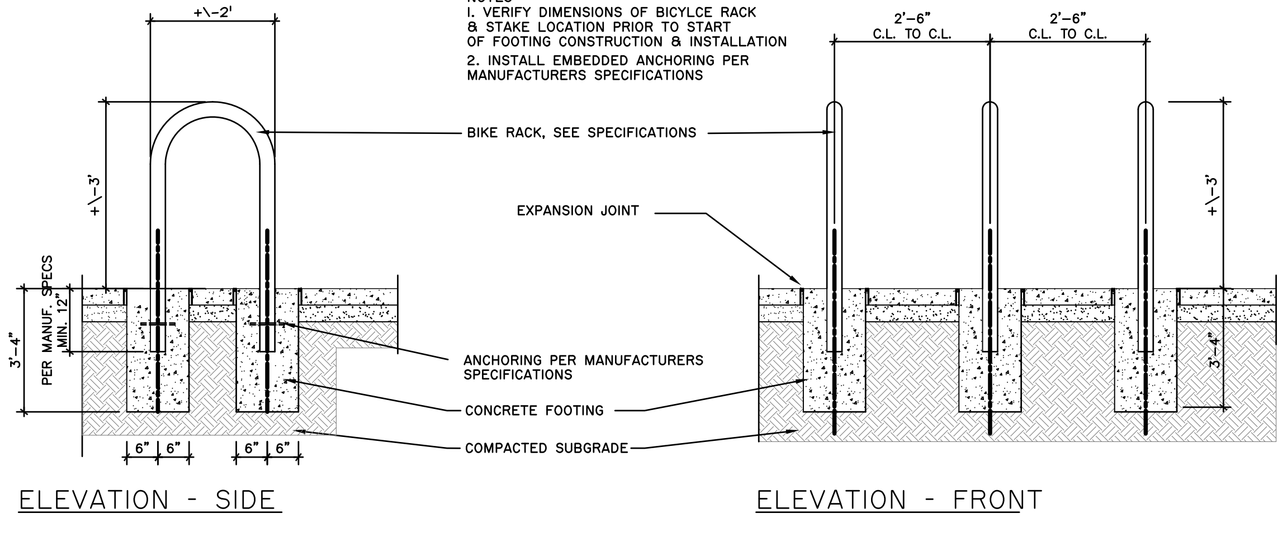

9 BICYCLE RACK

N.T.S.

Approval

Approved under authority of a resolution adopted _____ by the Planning Board of the City of Saratoga Springs.

_____ Chairperson

Date Signed _____

the LA group
Landscape Architecture and Engineering, PC
40 Long Alley
Saratoga Springs
New York 12866
P 518/587-8100
F 518/587-0180
www.thelagroup.com

Unauthorized alteration or addition to this document is a violation of Section 7209 of the New York State Education Law

© the LA Group 2008

Design MCB
Drawn MCB
Checked CMI

PREPARED FOR:
The PIKE Company, INC.
210 Clifton Corporate Parkway
Clifton Park, NY 12065

246 WEST AVENUE
RESIDENTIAL CONDOMINIUM COMPLEX
SARATOGA SPRINGS, NY

Title SITE DETAILS

Revisions
MYLAR CHECK SET 9/28/2012
MYLAR SET NOVEMBER 2012
May 2014

City #: 12.006.1
Project: 201178
Date: 1/25/2012

Drawing L-11

Plotted By: MATT BROBSTON
Save Date: 11/16/2012 5:11 PM
File Name: G:\Projects\12006.1\06 West Ave_246\2011\TRCAD\L-7_DETS.dwg

246 WEST AVE APARTMENTS

Saratoga, New York

PERSPECTIVE

RE4ORM ARCHITECTURE

246 WEST AVE APARTMENTS

Saratoga, New York

PERSPECTIVE

RE4ORM ARCHITECTURE

246 WEST AVE APARTMENTS

Saratoga, New York

PERSPECTIVE

RE4ORM ARCHITECTURE

CITY OF SARATOGA SPRINGS
PLANNING BOARD

City Hall - 474 Broadway
Saratoga Springs, New York 12866
Tel: 518-587-3550 fax: 518-580-9480
www.saratoga-springs.org

MARK TORPEY, Chair
ROBERT F. BRISTOL, Vice Chair
TOM L. LEWIS
CLIFFORD VAN WAGNER
HOWARD PINSLEY
JANET CASEY
JAMIN TOTINO
AMY DURLAND, Alternate
RUTH HORTON, Alternate

September 20, 2016

Steve Rowland, Chair
Design Review Commission
City Hall
474 Broadway
Saratoga Springs, NY 12866

RE: PB# 16.027 and 16.028- 246 West Avenue request for DRC input on proposed 16 unit Multi-family residential project

Dear Steve:

At its September 8, 2016 meeting, the Planning Board continued review of a special use permit and site plan application for 16 multi-family residential units at 246 West Avenue. Two sets of former special use permit and site plan approvals were issued, most recently as of January 22, 2014. While the current application continues to propose 16 multi-family residential units, the Board notes that the application now proposes changes such as the removal of the carriage house structure to the rear of the site. From the proposed elevations supplied, it also appears architectural changes have been made that call into question some of the original elements of the project.

We recognize that the proposed project is within the West Avenue corridor in an area experiencing change and new focus. The context of the site includes the active YMCA site with recent expansion approved, continued single story motel and adjacent residential homes. Directly across West Avenue, Pitney Community Farm plans are moving ahead which would preserve a large percentage of property as permanent open space, and introduce additional farm related activities to the corridor.

Upon initial review, the Planning Board voiced concerns and identified additional information they would like to request DRC input related to:

1. Consistency with current and evolving neighborhood. Existing includes adjacent low-rise motel, single-family residential and YMCA. Across Ballston Ave, the Pitney Farm proposes conservation of open space and community farming activities.

2. Consistency with community character. Is currently proposed single multi-story structure appropriate with existing community character? Is the loss of the carriage house as a visual transition a concern?

3. Mass and scale of proposed structure. Density of proposed units within context of surrounding lower intensity. The proposed 16 units can be considered within the Transect-4 District, however

the surrounding properties are largely lower in intensity per the City's Comprehensive Plan land use designations as well as current land uses. Consideration of mass and scale of the project.

4. Architecture. It was noted that the original project design started with a strong agrarian theme to complement the adjacent Pitney Farm; is current proposal strong architecturally and consistent throughout? Are there opportunities for improvement that should be considered within the site plan review?

The Planning Board values the experience and input of the DRC. We look forward to comments that you are able to provide in assistance of the consideration of SEQR negative declaration affirmation, and project review. Please let me know if you have any questions.

Sincerely,

Mark R. Gorg

Chair

The LA GROUP
Landscape Architecture & Engineering P.C.
People. Purpose. Place.
40 Long Alley
Saratoga Springs
NY 12866
p: [redacted]
f:
www.thelagroup.com

LETTER OF TRANSMITTAL

TO: Saratoga Springs Planning Department
City Hall
Saratoga Springs, NY 12866

DATE: 10/11/16 JOB NO.: 201178

RE: 246 West Avenue Apartments

WE ARE SENDING YOU ☑ Attached ☐ Under separate cover via_____the following items

☐ Shop drawings ☐ Prints ☐ Plans ☐ Samples ☐ Specifications
☐ Copy of letter ☐ Change order ☐ _____

COPIES	DATE	NO.	DESCRIPTION
1			24x36 revised elevation - Color
14			24x36 revised elevations – Black and White
1			CD of PDFs from the submission.

THESE ARE TRANSMITTED as checked below:

☐ For approval ☐ Approved as submitted ☐ Resubmit_____copies for approval
☐ For your records ☐ Approved as noted ☐ Submit_____copies for distribution
☐ As requested ☐ Return for corrections ☐ Return _____corrected prints
■ For review and comments ☐ _____
☐ FOR BIDS DUE _____20____ ☐ PRINTS RETURNED AFTER LOAN TO US

REMARKS:

cc: SIGNED:_____

If enclosures are not as noted, kindly notify us at once.

ELEVATIONS

5 10 20 40

SCALE 1/16" = 1' - 0"

SOUTHWEST ELEVATION

NORTHEAST ELEVATION

NORTH ELEVATION

WEST ELEVATION

SOUTHEAST ELEVATION

PERSPECTIVE RENDERING

RE4ORM ARCHITECTURE
323 CLINTON STREET
SCHENECTADY, NY 12305
P:518.399.4174
F:518.399.4105
WWW.RE4ORMARCHITECTURE.COM

246 WEST AVE APARTMENTS

246 WEST AVE
SARATOGA SPRINGS, NY

October 11th, 2016

CONTRACTOR SHALL VERIFY ALL DIMENSION AT SITE. UNAUTHORIZED ALTERATIONS OR ADDITIONS TO THIS DOCUMENT IS A VIOLATION OF THE NEW YORK STATE EDUCATION LAW.

THE Chazen COMPANIES®
Proud to be Employee Owned

Engineers
Land Surveyors
Planners
Environmental & Safety Professionals
Landscape Architects

Capital District Office
547 River Street
Troy, NY 12180
P: [redacted] F: [redacted]
www.chazencompanies.com

Hudson Valley Office
North Country Office [redacted]

Mr. Tim Wales, PE
City Engineer
City of Saratoga Springs
474 Broadway
Saratoga Springs, New York 12866

July 28, 2016

Re: Technical Review of Documents – 1st submittal - SWPPP
West Avenue Apartments
246 West Avenue Apartments
City of Saratoga Springs, Saratoga County, New York
City Project No. PB# 16.028
Chazen Project No. 31604.06

Dear Mr. Wales,

The Chazen Companies (Chazen) have completed our review of the Stormwater Pollution Prevention Plan (SWPPP), constituting the following materials received:

- Draft Stormwater Pollution Prevention Plan (SWPPP), dated June 23, 2016, prepared by The LA Group, P.C.
- Site Plans dated June 23, 2016, prepared by The LA Group, P.C., consisting of the following 14 sheets:
  - Cover
  - Boundary and Topographic Survey
  - L-1 Site Demolition and Preparation Plan
  - L-2 Site Layout and Materials Plan
  - L-3 Site Grading and Drainage Plan
  - L-4 Site Utility Plan
  - L-4.1 Off-Site Waterline Connection
  - L-5 Site Landscape Plan
  - L-6 Site Lighting Plan
  - L-7 Site Details
  - L-8 Site Details
  - L-9 Site Details
  - L-10 Site Details
  - L-11 Stormwater Details

As directed, our review focused only on the SWPPP and the stormwater management system design and associated grading/details. We did not perform a complete review of the site plans.

Following are our observations/comments:

Stormwater Pollution Prevention Plan:

1. The stormwater management plan utilizes infiltration through an infiltration pond, infiltration chambers and drywells. The SWPPP indicates that the required infiltration testing will be completed to confirm infiltration rates. Falling head permeability testing must be performed in accordance with the New York State Stormwater Management Design Manual (SWMDM), the designs updated as needed, and the SWPPP revised accordingly and resubmitted for review. Groundwater elevation data should be obtained for the area around the infiltration basin to ensure required separation from groundwater per the SWMDM.

2. The SWPPP describes soil stabilization requirements and construction sequencing. This information should be added to the drawings.

3. Notes should be added to the plans and SWPPP indicating how areas intended for infiltration practices will be protected during construction per the SWMDM.

4. Silt fencing appears on the drawings creating a perimeter around the entire site.

    a. Silt fence should be installed parallel to site contours.
    b. The silt fence detail should be consistent with requirements set forth in the New York Standards and Specifications for Erosion and Sediment Control Figure 5A.8. Please revise accordingly.

5. An isolator row of infiltration chambers is mentioned in the SWPPP to provide pretreatment but is not reflected on the drawings. If the isolator row is intended to provide required pretreatment, the drawings and HydroCAD model should be updated to show the isolator row and the pretreatment volume provided. Per the SWMDM, 100% of the Water Quality Volume (WQv) must be pretreated at the infiltration rates modeled.

6. Elevations listed in Detail 1 for the infiltration chamber on page L-11 are not consistent with spot elevations shown on the site plan. Please clarify. Bottom and invert elevations for infiltration chambers, and sizes and slopes of the distribution piping should be added to the site plan and the detail sheet.

7. Section 5.4 of the SWPPP summarizes the pre- and post- development discharge rates for the two design points but reports them a one total flow. Please revise the table to report the pre and post development rates for each design point separately.

8. The following pertain to the Existing Condition Watershed Map and HydroCAD model:

    a. Contours and subcatchment delineations on the Existing Conditions Watershed Map appear to be on a different elevation datum and do not agree with the contours presented on the site plans. Please revise accordingly.

    b. It appears from the site plan that water will flood the neighboring buildings prior to discharging south along West Avenue as the watershed delineation implies. It appears that

AP-1 realistically is two separate design points. AP-1 should represent the onsite depression and AP-3 (new) should receive the balance of the watershed from the home and sidewalk along West Avenue up to the bike path. Please revise accordingly

c. The watershed that drains to the onsite depression needs to be fully delineated to determine the impacts on the neighboring property. Please revise accordingly.

9. It appears from the Proposed Conditions Watershed Map that a depression on the neighboring property to the north (Adirondack Inn) will now flood due to the construction of the entrance drive and curbing. This backyard previously flowed into the onsite depression and will no longer be able to do so. Please address and revise the grading accordingly.

10. It also appears that the Proposed Conditions Watershed Map watershed delineation is not consistent with proposed and existing grades on the south side of the building – the seating and bike rack area appears to flow across the bike path, not into the infiltration system as modeled. Please clarify.

11. Please indicate limits of temporary construction easements that appear to be needed from:

    a. Adirondack Inn to allow grading depicted along the entrance drive
    b. David and Carol Frantz in order to construct the infiltration basin located in the southeast corner of the site.

12. A permanent drainage easement from the YMCA will be needed in order to regrade the site and direct stormwater into the proposed infiltration basin on the south side of the proposed building.

13. Gravel drip strips are shown in the plans to capture water flowing off of the roof of the building. It is unclear where this is detailed. Detail 1 on Sheet L-8 may show the drip strip detail, but is not consistent with the site plans or HydroCAD calculations. Please clarify and ensure that the detail contains appropriate elevations, such as invert elevation, top elevation, and bottom of trench elevation.

14. A construction entrance is shown on the site plans and as a detail, but is not consistent with New York Standards and Specifications for Erosion and Sediment Control Figure 5A.35. Please revise accordingly.

15. A proposed drywell is modeled in the HydroCAD model for the project. The drywell is detailed with insufficient dimensions and elevations. Please update dimensions and provide elevations of the inlet grate, top of structure, bottom of structure and dimension of the annular ring of stone around the structure for consistency between the model and plans.

16. The SWPPP indicates that ownership and maintenance of the SWM practices will be by John-Paul Construction, Inc. A formal inspection and maintenance agreement, acceptable to the City and in accordance with City Code Chapter 242, must be in place to assure that the practices will be properly operated and maintained in accordance with the long term operation and maintenance plans included in the SWPPP. Please submit an agreement for the City's review. A sample agreement is available in City Code Chapter 242.

17. The City Engineer's office requires that yearly inspection and maintenance reports for post-construction stormwater management facilities be submitted for their files. This requirement should be added to the SWPPP.

In order to expedite and simplify the review of revised materials we would appreciate if the next submission be accompanied by a response letter that describes the revised materials and how our comments were/were not integrated.

Sincerely,

James J. Connors, P.E., Principal
Senior Director, Engineering Services

cc: Emily Garbenis
File

Z:\projects\31600-31699\31604.XX - Saratoga Springs CDE master\31604_06 West Ave Apts\submittals\1st submittal\sent\31604-06_WestAveApts_1st-Submittal_2016-07-28.docx

[FOR OFFICE USE]

(Application #)

(Date received)

CITY OF SARATOGA SPRINGS

PLANNING BOARD

City Hall - 474 Broadway
Saratoga Springs, New York 12866-2296
Tel: 518-587-3550 fax: 518-580-9480
http://www.saratoga-springs.org

APPLICATION FOR:
SITE PLAN REVIEW
(INCLUDING PUD)

(Rev: 12/2015)

*****Application Check List - All submissions must include completed application check list and all required items.**

Project Name: The Ice House - Permanent Tent

Property Address/Location: 70 & 72 Putnam St., Saratoga Springs, NY 12866

Tax Parcel #: 160.60-1-51 & 52 *(for example: 165.52-4-37)* Zoning District: T-6

Proposed Use: Installation of permanent tent structure to replace existing temporary tent

Date special use permit granted (if any): _____ Date zoning variance granted (if any): August 2, 2016

Is property located within (check all that apply)?:
- ☐ Historic District
- ☑ Architectural Review District
- ☑ 500' of a State Park, city boundary, or county/state highway

	APPLICANT(S)*	OWNER(S) *(If not applicant)*	ATTORNEY/AGENT
Name	Lynchy's Tavern, Inc.	(Same)	Agent: Engineering America Co.
Address	70 & 72 Putnam St.		76 Washington St.
	Saratoga Springs, NY 12866		Saratoga Springs, NY 12866
Phone			[redacted]
Email			

Identify primary contact person: ☐ Applicant ☐ Owner ☑ Agent

* An applicant must be the property owner, lessee, or one with an option to lease or purchase the property in question.

Application Fee: A check for the total amount below payable to: "Commissioner of Finance" MUST accompany this application.

☐	Sketch Plan -	$250	$ _____
☐	Final Site Plan Approval Residential -	$250 plus $150/unit	$ _____
	Non-Residential -	$500 plus $100/1,000 SQ. FT.	$ _____
☑	Modification Residential -	$250	$ _____
	Non-Residential -	$500	$ 500 -
			Total $ 500 -

Submission Deadline – Check City's website (www.saratoga-springs.org) for application deadlines and meeting dates.

Does any City officer, employee or family member thereof have a financial interest (as defined by General Municipal Law Section 809) in this application? YES ☐ NO ☑. If YES, a statement disclosing the name, residence, nature and extent of this interest must be filed with this application.

I, the undersigned owner, leasee or purchaser under contract for the property, hereby request Site Plan Review by the Planning Board for the identified property above. I agree to meet all requirements under Section 240-7.2 of the Zoning Ordinance of the City of Saratoga Springs.

Furthermore, I hereby authorize members of the Planning Board and designated City staff to enter the property associated with this application for purposes of conducting any necessary site inspections relating to this application.

Applicant Signature: Sean J Lyle Date: 5/19/16

If applicant is not current owner, owner must also sign.

Owner Signature: (SAME AS ABOVE) Date: _____

Short Environmental Assessment Form
Part 1 - Project Information

Instructions for Completing

Part 1 - Project Information. The applicant or project sponsor is responsible for the completion of Part 1. Responses become part of the application for approval or funding, are subject to public review, and may be subject to further verification. Complete Part 1 based on information currently available. If additional research or investigation would be needed to fully respond to any item, please answer as thoroughly as possible based on current information.

Complete all items in Part 1. You may also provide any additional information which you believe will be needed by or useful to the lead agency; attach additional pages as necessary to supplement any item.

Part 1 - Project and Sponsor Information

The Ice House by Lynchy's Tavern, Inc.

Name of Action or Project:

The Ice House - Permanent Tent

Project Location (describe, and attach a location map):

#70 & 72 Putnam St., Saratoga Springs, NY

Brief Description of Proposed Action:

Installation of permanent tent structure to replace previous temporary tent.
DRC review & approval granted July 13, 2015.
ZBA variance for height and location approved July 11, 2016 & Signed / Filed 8/2/16.

Name of Applicant or Sponsor:	Telephone: [redacted]
Lynchy's Tavern, Inc.	E-Mail:

Address:

70 & 72 Putnam St.

City/PO:	State:	Zip Code:
Saratoga Springs	NY	12866

	NO	YES
1. Does the proposed action only involve the legislative adoption of a plan, local law, ordinance, administrative rule, or regulation? If Yes, attach a narrative description of the intent of the proposed action and the environmental resources that may be affected in the municipality and proceed to Part 2. If no, continue to question 2.	☑	☐
2. Does the proposed action require a permit, approval or funding from any other governmental Agency? If Yes, list agency(s) name and permit or approval: Building Permit by City of Saratoga Springs Building Dept.	☐	☑

3.a. Total acreage of the site of the proposed action? 0.098 acres
b. Total acreage to be physically disturbed? 24 sq.ft. (+/-) acres
c. Total acreage (project site and any contiguous properties) owned or controlled by the applicant or project sponsor? 0.098 acres

4. Check all land uses that occur on, adjoining and near the proposed action.
☑ Urban ☐ Rural (non-agriculture) ☐ Industrial ☐ Commercial ☐ Residential (suburban)
☐ Forest ☐ Agriculture ☐ Aquatic ☐ Other (specify): _____
☐ Parkland

	NO	YES	N/A
5. Is the proposed action, a. A permitted use under the zoning regulations?	☐	☑	☐
b. Consistent with the adopted comprehensive plan?	☐	☑	☐

	NO	YES
6. Is the proposed action consistent with the predominant character of the existing built or natural landscape?	☐	☑

	NO	YES
7. Is the site of the proposed action located in, or does it adjoin, a state listed Critical Environmental Area? If Yes, identify: _____	☑	☐

	NO	YES
8. a. Will the proposed action result in a substantial increase in traffic above present levels?	☑	☐
b. Are public transportation service(s) available at or near the site of the proposed action?	☐	☑
c. Are any pedestrian accommodations or bicycle routes available on or near site of the proposed action?	☑	☐

	NO	YES
9. Does the proposed action meet or exceed the state energy code requirements? If the proposed action will exceed requirements, describe design features and technologies: The Tent structure will not be conditioned / heated and will therefore have no requirements for insulation.	☐	☑

	NO	YES
10. Will the proposed action connect to an existing public/private water supply? If No, describe method for providing potable water: _____ The Ice House establishment has an existing public water connection. There are no new water connections associated with the installation of the permanent tent structure.	☑	☐

	NO	YES
11. Will the proposed action connect to existing wastewater utilities? If No, describe method for providing wastewater treatment: _____ The Ice House establishment has an existing public sewer connection. No new connections are proposed with this project	☑	☐

	NO	YES
12. a. Does the site contain a structure that is listed on either the State or National Register of Historic Places?	☑	☐
b. Is the proposed action located in an archeological sensitive area?	☑	☐

	NO	YES
13. a. Does any portion of the site of the proposed action, or lands adjoining the proposed action, contain wetlands or other waterbodies regulated by a federal, state or local agency?	☑	☐
b. Would the proposed action physically alter, or encroach into, any existing wetland or waterbody? If Yes, identify the wetland or waterbody and extent of alterations in square feet or acres: _____	☑	☐

14. Identify the typical habitat types that occur on, or are likely to be found on the project site. Check all that apply:

☐ Shoreline ☐ Forest ☐ Agricultural/grasslands ☐ Early mid-successional
☐ Wetland ☑ Urban ☐ Suburban

	NO	YES
15. Does the site of the proposed action contain any species of animal, or associated habitats, listed by the State or Federal government as threatened or endangered?	☑	☐

	NO	YES
16. Is the project site located in the 100 year flood plain?	☑	☐

	NO	YES
17. Will the proposed action create storm water discharge, either from point or non-point sources? If Yes, a. Will storm water discharges flow to adjacent properties? ☑ NO ☐ YES	☑	☐
b. Will storm water discharges be directed to established conveyance systems (runoff and storm drains)? If Yes, briefly describe: ☐ NO ☑ YES The proposed permanent tent structure is the same size as what currently exists. The tent structure is erected over an existing impermeable patio surface. Currently stormwater is managed via a previously approved on-site drywell		

	NO	YES
18. Does the proposed action include construction or other activities that result in the impoundment of water or other liquids (e.g. retention pond, waste lagoon, dam)? If Yes, explain purpose and size: _____	☑	☐
19. Has the site of the proposed action or an adjoining property been the location of an active or closed solid waste management facility? If Yes, describe: _____	☑	☐
20. Has the site of the proposed action or an adjoining property been the subject of remediation (ongoing or completed) for hazardous waste? If Yes, describe: _____	☑	☐

I AFFIRM THAT THE INFORMATION PROVIDED ABOVE IS TRUE AND ACCURATE TO THE BEST OF MY KNOWLEDGE

Applicant/sponsor name: Sean Lynch Date: 8/17/16

Signature: _____

PRINT FORM

ENGINEERING AMERICA CO.

76 WASHINGTON ST. SARATOGA SPRINGS, NY 12866

[redacted]

TRANSMITTAL SHEET

TO: Tim Wales, City Engineer	FROM: Tonya Yasenchak
COMPANY: City of Saratoga Springs	DATE: August 18, 2016
FAX NUMBER:	TOTAL NO. OF PAGES INCLUDING COVER: 1 Site Plan Application + $500 App. Fee
PHONE NUMBER:	SENDER'S REFERENCE NUMBER:
RE: Lynchy's Tavern: The Ice House #70 & 72 Putnam St., Saratoga Springs	YOUR REFERENCE NUMBER:

☐ URGENT ☑ FOR REVIEW ☐ PLEASE COMMENT ☐ PLEASE REPLY ☐ AS REQUESTED

Tim Wales,

Engineering America Co. has been retained to represent the Ice House owner as he proposes a permanent tent installation at 70-72 Putnam St. in Saratoga Springs, NY. The Building Dept. and Planning Dept. has requested that a modified site plan be reviewed by the City Planning Board. The following items address required items for the Site Plan:

Stormwater Management:

- No site construction or excavation is being proposed beyond the installation of the tent supports. There are 12 supports, resulting in a maximum disturbance of 24 sq.ft.
- The tent is proposed to be installed in a location which is currently paved and impermeable. The impermeable surface of the site will not be changed in anyway due to the proposed tent.
- The tent currently has a temporary permit. The new proposed location will not change the existing drainage patterns on the site.
- A previously approved catch basin exists on site. The stormwater conditions, volume, drainage and management will not be effected by the proposed tent.

Project Cost Estimate:

- The tent currently exists and will be relocated on a permanent basis in a slightly different location to allow for 5' separation between the tent & the property lines. No costs exist with the tent itself.
- Twelve (12) new permanent supports will be installed for the tent structure. The installation cost per support is approx. $150 per = $1800 cost.
- The on-site brick patio will be repaired with existing bricks to be removed for the new supports.
- There is no work proposed within the City Right of Way for sidewalks or landscaping as these elements already exist & are in good repair.

Please contact my office with any questions or if additional information is required.
Thank you for your time and cooperation.

Tonya Yasenchak, PE
Enc.

City of Saratoga Springs Complete Streets Checklist

Saratoga Springs Complete Street Policy Vision (May 2012)

The City of Saratoga Springs Complete Streets Policy will encourage the development of a complete streets network throughout the City to create a more balanced transportation system. The Policy shall be consistent with and assist in achieving the goals and recommendations set forth in the City's Comprehensive Plan and other policy documents. The Policy shall ensure new and updated public and private projects are planned, designed, maintained and operated to enable safer, comfortable and convenient travel to the greatest extent possible for users of all abilities including pedestrians, bicyclists, motorists and transit riders.

This checklist is intended to assist the City in achieving its vision for complete streets.

Project Name: The Ice House - Permanent Tent **Date:** 8/17/2016

Project Location / Limits: 70 & 72 Putnam St., Saratoga Springs, NY

Project Description: Installation of permanent tent structure to replace temporary tent structure

Instructions: For each box checked, please provide a brief description for how the item is addressed, not addressed, or not applicable and include supporting documentation.

Street Classification (identify street or streets within the project area)

Principal arterial ☐ Minor arterial ☐ Mixed use collector ☐ Mixed use local ☐
Residential collector ☐ Residential local ☐ Special use street ■

EXISTING CONDITIONS				
Item to Be Addressed/ Checklist Consideration	**YES**	**NO**	**N/A**	**Required Description**
Existing Bicycle & Pedestrian Operations				
Do bicycle and pedestrian accommodations exist? (see page 2 for examples)	☑	☐	☑	Sidewalks exist
Existing Transit Operations				
Do transit facilities exist within the study area, including bus and train stops/stations?	☑	☐	☐	CDTA services located on Broadway
Is the project area on a transit route? (CDTA Service Routes)	☐	☑	☐	
Are there bicycle racks, shelters, or parking for transit riders available?	☑	☐	☐	Located at adjacent public library
Existing Access and Mobility				
Do connective opportunities exist with schools, hospitals, senior care or community centers or persons with disabilities within project area?	☑	☐	☐	
Are there gaps inhibiting continuous access between schools, hospitals, senior care, or community centers or persons with disabilities within project area?"	☐	☑	☐	
Project Area Context				
Are there prominent landmarks, recreation, shopping, employment center, cultural centers or other key destinations that offer opportunities to connect this site?	☑	☐	☐	
Please list and/or describe planning or policy documents addressing bicyclist, pedestrian, transit, or truck/ freight use for the project area. Examples can include: City of Saratoga Springs Comprehensive Plan, City of Saratoga Springs Open Space Plan, Capital District Transportation Committee Bicycle/ Pedestrian Priority Network, City Standard Details, etc.				

PROPOSED DESIGN

Item to Be Addressed/ Checklist Consideration	YES	NO	N/A	Required Description
Complete Streets Design				
Bicyclist accommodations?	☐	☑	☐	no bicycle accomodations proposed
Pedestrian accommodations?	☑	☐	☐	Sidewalks existing - no new proosed
Access and Mobility accommodations?	☑	☐	☐	Existing sidewalks allow for access & mobility
Transit accommodations?	☐	☑	☐	not applicable to project
Truck/ freight accommodations?	☐	☑	☐	existing designated delivery parking on Putnam St
Streetscape elements?	☐	☑	☐	existing trees and landscaping - no new proposed

Bike Facilities:	
Off-roadway bike accommodations	☐ Yes ☐ No ☑ NA
Dedicated bike lane	☐ Yes ☐ No ☑ NA
Shared-use lane	☐ Yes ☐ No ☑ NA
Shoulder	☐ Yes ☐ No ☑ NA
Acceptable actuated traffic signal bike detection, including turn lanes	☐ Yes ☐ No ☑ NA
Do signals allow adequate minimum green time for bicyclist to safely cross intersection?	☐ Yes ☐ No ☑ NA
Signage and pavement markings specific to proposed bike facilities	☐ Yes ☐ No ☑ NA
Bicycle safe inlet grates	☐ Yes ☐ No ☑ NA
Bicycle parking, eg. bike racks, bike lockers	☐ Yes ☑ No ☐ NA
Transit Facilities:	
Transit shelters	☐ Yes ☐ No ☑ NA
Bus turnouts	☐ Yes ☐ No ☑ NA
Standing pads	☐ Yes ☐ No ☑ NA
Has CDTA been contacted?	☐ Yes ☐ No ☑ NA
Access and Mobility Facilities:	
Adequate sidewalk or paved path	☑ Yes ☐ No ☐ NA
Acceptable consideration/provision for accessible pedestrian traffic signal features	☐ Yes ☐ No ☑ NA
Curb ramps, including detectable warning surface	☐ Yes ☐ No ☑ NA
Acceptable slope and cross-slope for driveway ramps, sidewalks, crossings)	☐ Yes ☐ No ☑ NA
Have conflicts been reduced among pedestrian, bicyclists, and motor vehicles (access management)?	☐ Yes ☐ No ☑ NA

Pedestrian Facilities:	
Sidewalks on both sides of the street	☑ Yes ☐ No ☐ NA
Striped crosswalks	☐ Yes ☐ No ☑ NA
Geometric modifications to reduce crossing distances such as curb extensions (e.g. bulb-outs)	☐ Yes ☐ No ☑ NA
Acceptable provision for pedestrian traffic signal features (e.g. ped. buttons)	☐ Yes ☐ No ☑ NA
Pedestrian signage for crossing & wayfinding	☐ Yes ☐ No ☑ NA
Safety islands/medians on roadways with two or more traffic lanes in each direction	☐ Yes ☐ No ☑ NA
Enhanced supplemental pedestrian treatments at uncontrolled marked crossings	☐ Yes ☐ No ☑ NA
Connectivity:	
Are there proposed connections to other bike paths, pedestrian facilities, or transit facilities?	☑ Yes ☐ No ☐ NA
Are there proposed connections to any key destinations listed on page 1?	☑ Yes ☐ No ☐ NA
Are there proposed connections to neighborhoods?	☐ Yes ☐ No ☑ NA
Streetscape Elements:	
Are streetscape elements proposed such as landscaping, street trees, planters, buffer strips, etc?	☐ Yes ☑ No ☐ NA
Pedestrian-level lighting	☐ Yes ☑ No ☐ NA
Public seating or benches	☐ Yes ☑ No ☐ NA

Design Standards and Guidelines				
Design meets guidelines such as described below for bicycle/pedestrian/bus/transit facilities?	☑ Yes	☐ No	☐ NA	Describe

*__American Association of State Highway and Transportation Officials (AASHTO)__ - *A Policy on Geometric Design of Highway and Streets, Guide for the Development of Bicycle Facilities and AASHTO Guide for the Planning, Design, and Operation of Pedestrian Facilities;* Public Right-of-Way Accessibility Guide(PROWAG); *Manual on Uniform Traffic Control Devices* (MUTCD); *Americans with Disabilities Act Accessibility Guidelines* (ADAAG); **National Association of City Transportation Officials (NACTO)** - *Urban Bikeway Design Guide*. **New York State Department of Transportation** – *Highway Design Manual*

CITY OF SARATOGA SPRINGS

PLANNING BOARD

City Hall - 474 Broadway
Saratoga Springs, New York 12866-2296
Tel: 518-587-3550 fax: 518-580-9480
http://www.saratoga-springs.org

[FOR OFFICE USE]

_____
(Application #)

_____
(Date received)

Rev.12/2015

SITE PLAN REVIEW SUBMITTAL CHECKLIST

Project Name: THE ICE HOUSE - PERMANENT TENT

Listed below are the minimum submittal requirements for site plan review as set forth in The City of Saratoga Springs' Zoning Ordinance Appendix B. The Planning Board reserves the right to request additional information, as necessary, to support an application. The Board also reserves the right to reject the application if these minimum requirements are not met. Please complete the checklist below and provide with your submission.

REQUIRED ITEMS: *3 hard copies and 1 digital copy of ALL materials are required.

CHECK EACH ITEM	
☑	1. Completed Site Plan Application (3 hard copies - *1 w/original signature - and 1 digital) and Fee
☑	2. SEQR Environmental Assessment Form- short or long form as required by action.
☑	3. Set of plans including: (3) large scale plans (sheets must be 24" x 36", drawn to a scale of not more than 1"=50 feet). One digital version of all submittal items (pdf) shall be provided.
☑	4. Basic or Full Storm Water Pollution Prevention Plan as required per City Code Chapter 242. ENGINEERING LETTER
☐ N/A	5. Copy of signed DPW water connection agreement for all projects involving new water connections to the City system (NOT APPLICABLE) - EXISTING & UNCHANGED
☐ N/A	6. Engineering Report for Water and Sanitary NOT-APPLICABLE - EXISTING & UNCHANGED
☑	7. Complete Streets Checklist
☐ N/A	8. Project Cost Estimate-Quantities of work items and estimate of costs - ALL COSTS ARE ASSOCIATED WITH TENT INSTALLATION & NOT SITE.

REQUIRED ITEMS ON SITE PLAN, AS APPLICABLE:

☑	1. Property line survey prepared by a licensed land surveyor. Site plan must reference such survey with all corners set and marked on plan. A copy of the original property survey must also be included.
☑	2. North arrow and map scale
☑	3. Parcel tax map number
☐	4. Site location map
☐	5. Site vicinity map (all features within 300 feet of property)
☑	6. Identification of zoning district with corresponding area requirements

☐	7. Building setback lines, either listed or shown on plans.
☑	8. Title block with project name; name and address of applicant; and name and address of property owner (if different)
☐ NA	9. Topography data tied to NGVD 1929 datum
☑	10. Name of all adjacent property owners
☑	11. Parcel street address (existing and any proposed postal addresses)
Yes ☑ No ☐ N/A ☐	12. Identification of all existing or proposed easements, covenants or legal rights-of-way on this property
☑ ☐ ☐	13. References to all prior variances or special use permits
☐ ☐ ☑	14. Existing and proposed contours and spot grades (at 2 foot intervals)
☐ ☐ ☑	15. Identification of all spoil or borrow areas
☐ ☐ ☑	16. Identification of all watercourses, designated State wetlands, buffers, Federal wetlands, floodplains, rock outcroppings, etc.
☑ ☐ ☐	17. Location of proposed storage
☑ ☐ ☐	18. Identification of all existing or proposed sidewalks or pedestrian paths (show type, size and condition of existing sidewalks)
☐ ☐ ☑	19. Location, design specifications and construction material for all proposed site improvements (drains, culverts, retaining walls, berms, fences, etc.)
☐ ☐ ☑	20. Location and distance to fire hydrant
☐ ☐ ☐	21. Location, size, and material of all existing and proposed utility services
☐ ☐ ☑	22. Parking lot layout plan and identification of all loading areas (number all spaces)
☐ ☐ ☑	23. Parking demand calculations
☐ ☐ ☑	24. Identification of parking spaces and access points for physically impaired persons
☑ ☐ ☐	25. Location and screening plan for dumpster or recycling bins
☑ ☐ ☐	26. Location, design, type of construction and materials, proposed use and exterior dimensions of all buildings (existing and proposed) on site
☐ ☐ ☑	27. Identification of storage of any potentially hazardous materials
☐ ☐ ☐	28. Planting plan identifying quantity, species and size of all proposed new plant materials. Label existing plant material to be retained or removed.
☐ ☐ ☐	29. Lighting plan showing type, location and intensity of all existing and proposed exterior lighting fixtures
☐ ☐ ☑	30. Erosion and sediment control plan – including designated concrete truck washout area

Checklist prepared by: _____ Date: 8/18/16

The Ice House: 70-72 Putnam

Legend

- County
- Municipal Boundaries
- Parcels

Local Roads

- Local
- State and County
- US and Interstate

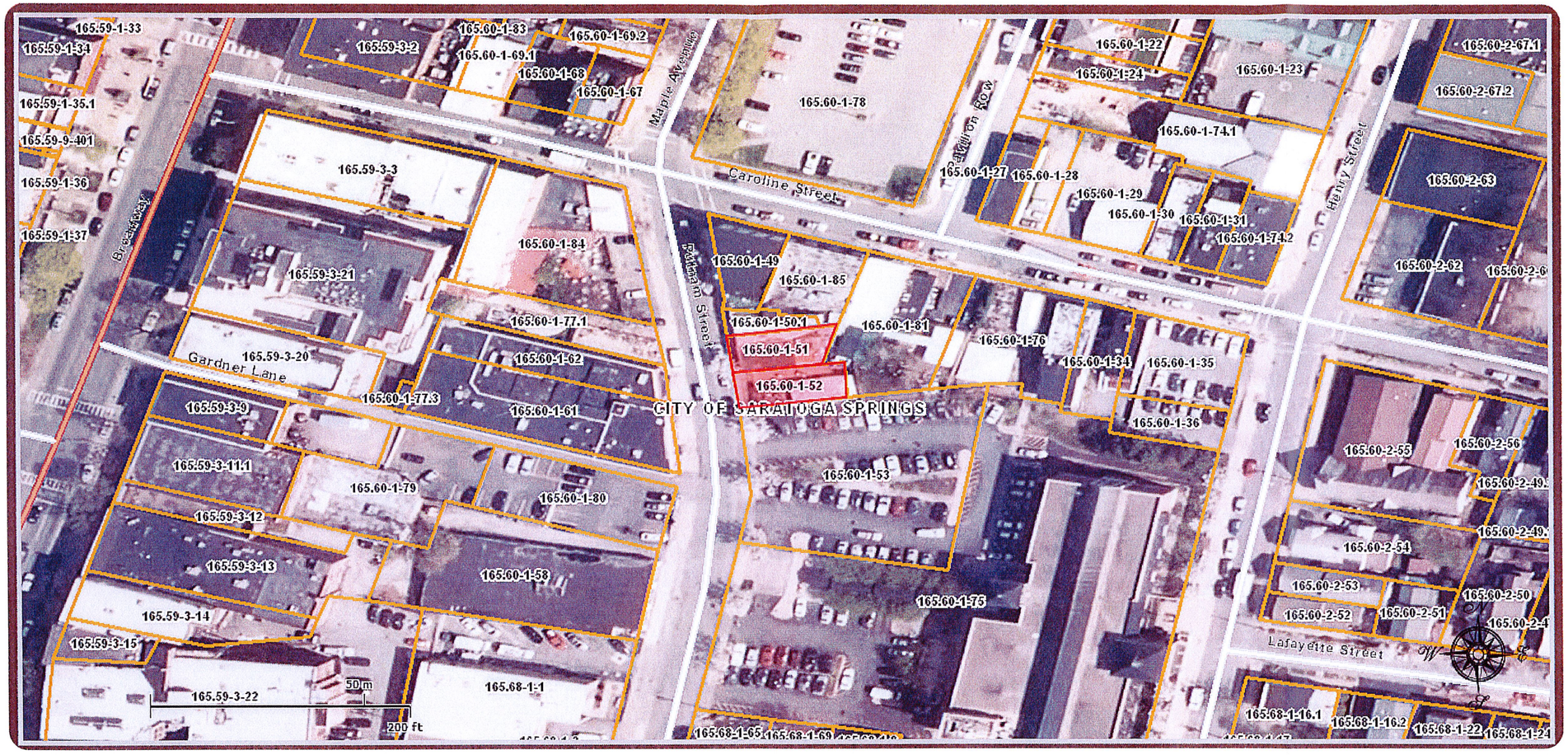

Disclaimer: This map was prepared by the Saratoga County Internet Geographic Information System (GIS). The map was compiled using the most current GIS data available. The aerial photography (orthoimagery) was prepared by the N.Y.S. Office of Cyber Security and Critical Infrastructure Coordination during the year 2004-2011. Parcel and municipal boundaries are derived from tax maps and do not represent a land survey.

August 18, 2016

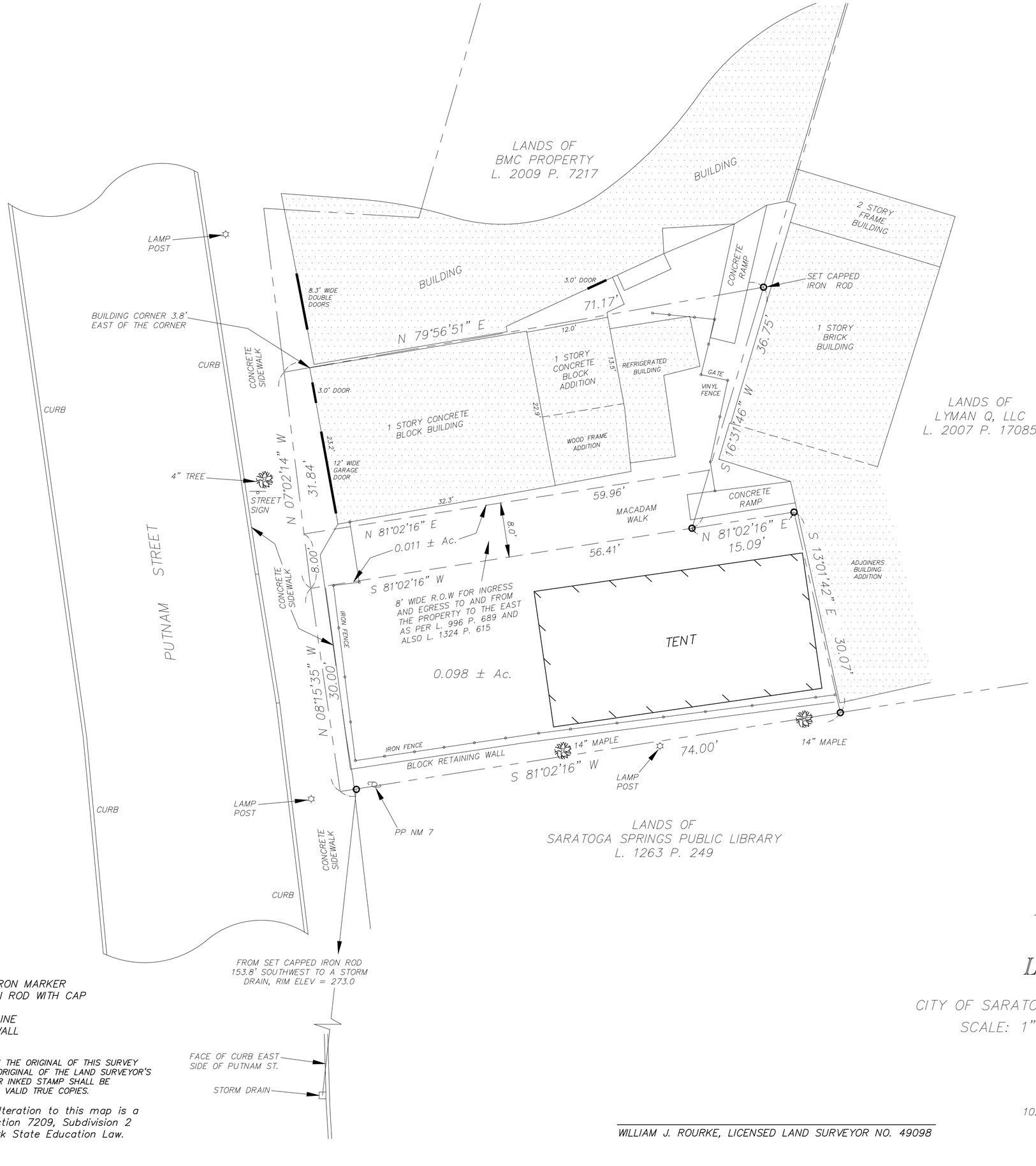

AS PER MAP REF. NO. 1

MAP REFERENCES:

1. MAP OF PROPERTY OF THOMAS WILLSON TO BE CONVEYED TO MARK AND KIMBERLY A. SUTTON, CITY OF SARATOGA SPRINGS, DATED JANUARY 12, 1998, BY THOMPSON & FLEMING L.S., P.C.
2. MAP OF PARKING/RELOCATION PLAN FOR PUTNAM STREET PARKING LOT (PARCEL 3) HATHORN SPRING NO. 1, BEING LANDS OF THE CITY OF SARATOGA SPRINGS, DATED MARCH 15, 1999, BY PAUL K. MALE P.E., P.L.S. CITY ENGINEER.
3. MAP OF SURVEY OF LANDS OF THOMAS WILLSON, CITY OF SARATOGA SPRINGS, DATED APRIL 20, 1999, BY W.J. ROURKE ASSOCIATES L.L.S., FILED AS JOB NO. 99-55B.
4. SARATOGA COUNTY, CITY OF SARATOGA SPRINGS, TAX MAP NO. 165.60, BLOCK 1, PARCEL NO. 51 AND 52, L. 996 P. 689, AND L. 1101 P. 523.

* SUBJECT TO AN EASEMENT AND RIGHT-OF-WAY FOR INGRESS AND EGRESS TO AND FROM PROPERTY TO THE EAST, TO ALLOW DELIVERIES TO TAVERN PROPERTY AS PER L. 996 P. 689 AND L. 1324 P. 615.

LEGEND:

- FOUND IRON MARKER
- SET IRON ROD WITH CAP
- POINT
- —E— POWER LINE
- STONE WALL
- —x—x— FENCE

ONLY COPIES FROM THE ORIGINAL OF THIS SURVEY MARKED WITH AN ORIGINAL OF THE LAND SURVEYOR'S EMBOSSED SEAL OR INKED STAMP SHALL BE CONSIDERED TO BE VALID TRUE COPIES.

Unauthorized Alteration to this map is a violation of Section 7209, Subdivision 2 of the New York State Education Law.

MAP OF SURVEY

OF LANDS OF

LYNCHY'S TAVERN

CITY OF SARATOGA SPRINGS, SARATOGA COUNTY, NEW YORK

SCALE: 1" = 10' DATE: APRIL 18, 2016

WILLIAM J. ROURKE, LICENSED LAND SURVEYOR NO. 49098

W. J. ROURKE, ASSOCIATES
Licensed Land Surveyors
10264 Saratoga Road, P.O. Box 1434
South Glens Falls, N.Y. 12803

16-12
JOB NO.

W.J. ROURKE, ASSOCIATES — LICENSED LAND SURVEYORS
P.O. BOX 1434, SARATOGA ROAD, SOUTH GLENS FALLS, NEW YORK 12803

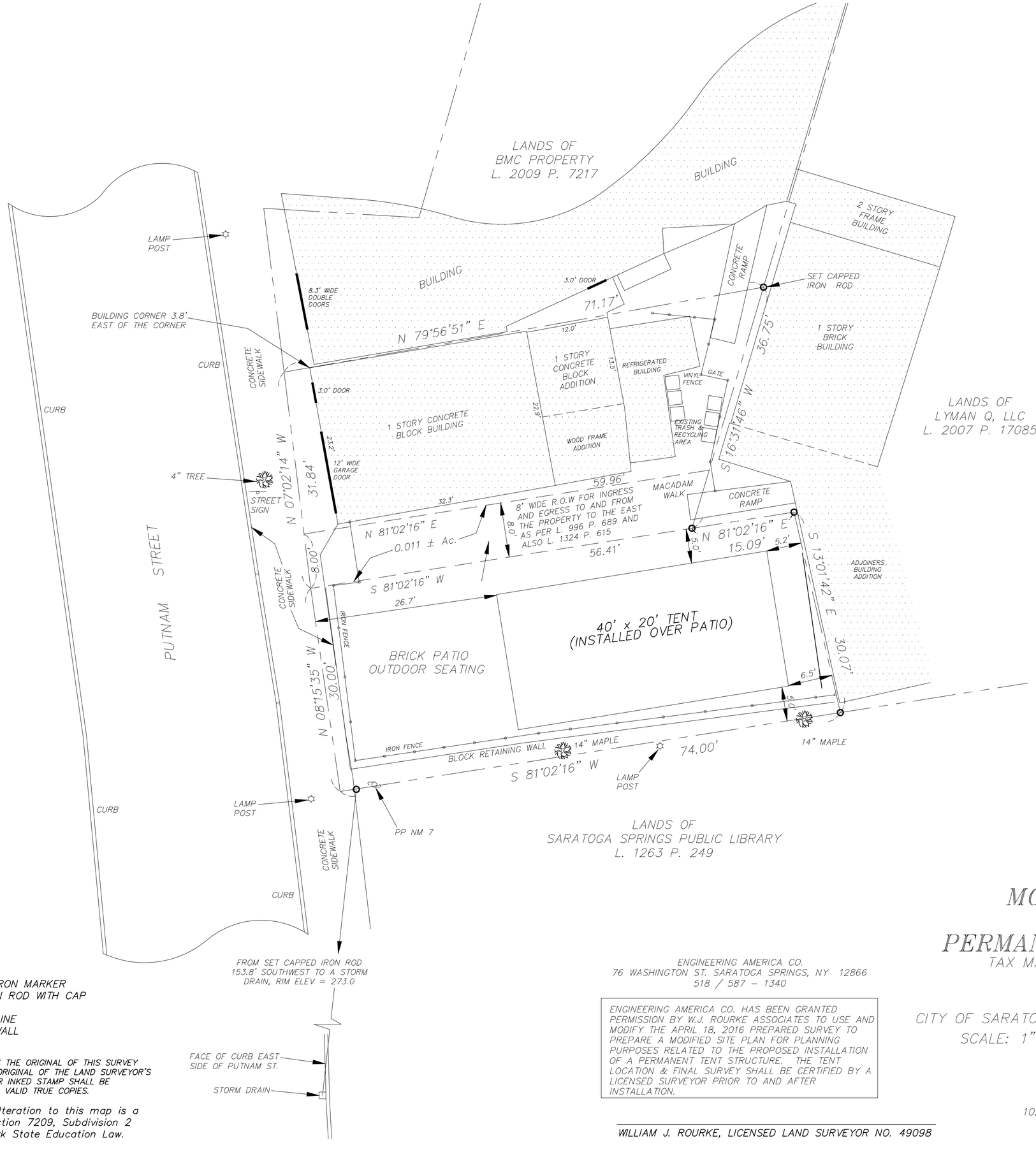

AS PER MAP REF. NO. 1

MAP REFERENCES:

1. MAP OF PROPERTY OF THOMAS WILLSON TO BE CONVEYED TO MARK AND KIMBERLY A. SUTTON, CITY OF SARATOGA SPRINGS, DATED JANUARY 12, 1998, BY THOMPSON & FLEMING L.S., P.C.
2. MAP OF PARKING/RELOCATION PLAN FOR PUTNAM STREET PARKING LOT (PARCEL 3) HATHORN SPRING NO. 1, BEING LANDS OF THE CITY OF SARATOGA SPRINGS, DATED MARCH 15, 1999, BY PAUL K. MALE P.E., P.L.S. CITY ENGINEER.
3. MAP OF SURVEY OF LANDS OF THOMAS WILLSON, CITY OF SARATOGA SPRINGS, DATED APRIL 20, 1999, BY W.J. ROURKE ASSOCIATES L.L.S., FILED AS JOB NO. 99-55B.
4. SARATOGA COUNTY, CITY OF SARATOGA SPRINGS, TAX MAP NO. 165.60, BLOCK 1, PARCEL NO. 51 AND 52, L. 996 P. 689, AND L. 1101 P. 523.

* SUBJECT TO AN EASEMENT AND RIGHT-OF-WAY FOR INGRESS AND EGRESS TO AND FROM PROPERTY TO THE EAST, TO ALLOW DELIVERIES TO TAVERN PROPERTY AS PER L. 996 P. 689 AND L. 1324 P. 615.

GENERAL INFORMATION:

1. OWNER & APPLICANT: LYNCHY'S TAVERN, INC.
   70 & 72 PUTNAM ST., SARATOGA SPRINGS, NY
2. SITE: 0.098 ACRES
3. ZONING DISTRICT: T-6
4. ZONING VARIANCES GRANTED FOR 1 STORY STRUCTURE AND MINIMUM BUILD OUT ON JULY 11, 2016.
5. DRC REVIEW & APPROVAL GRANTED JULY 13, 2016

LEGEND:

- ● FOUND IRON MARKER
- ○ SET IRON ROD WITH CAP
- ⊙ POINT
- —E— POWER LINE
- ○○○○○ STONE WALL
- —x—x— FENCE

ONLY COPIES FROM THE ORIGINAL OF THIS SURVEY MARKED WITH AN ORIGINAL OF THE LAND SURVEYOR'S EMBOSSED SEAL OR INKED STAMP SHALL BE CONSIDERED TO BE VALID TRUE COPIES.

Unauthorized Alteration to this map is a violation of Section 7209, Subdivision 2 of the New York State Education Law.

MODIFIED SITE PLAN
THE ICE HOUSE
PERMANENT TENT STRUCTURE

TAX MAP: 160.60-1-51 & 160.60-1-52

#70 & 72 PUTNAM ST.
CITY OF SARATOGA SPRINGS, SARATOGA COUNTY, NEW YORK
SCALE: 1" = 10' DATE: APRIL 18, 2016

ENGINEERING AMERICA CO.
76 WASHINGTON ST. SARATOGA SPRINGS, NY 12866
518 / 587 - 1340

ENGINEERING AMERICA CO. HAS BEEN GRANTED PERMISSION BY W.J. ROURKE ASSOCIATES TO USE AND MODIFY THE APRIL 18, 2016 PREPARED SURVEY TO PREPARE A MODIFIED SITE PLAN FOR PLANNING PURPOSES RELATED TO THE PROPOSED INSTALLATION OF A PERMANENT TENT STRUCTURE. THE TENT LOCATION & FINAL SURVEY SHALL BE CERTIFIED BY A LICENSED SURVEYOR PRIOR TO AND AFTER INSTALLATION.

WILLIAM J. ROURKE, LICENSED LAND SURVEYOR NO. 49098

W. J. ROURKE, ASSOCIATES
Licensed Land Surveyors
10264 Saratoga Road, P.O. Box 1434
South Glens Falls, N.Y. 12803

JOB NO.

W.J. ROURKE, ASSOCIATES - LICENSED LAND SURVEYORS
P.O. BOX 1434, SARATOGA ROAD, SOUTH GLENS FALLS, NEW YORK 12803

70 Putnam

2008211483367

2008023159 $214.00
7/1/2008 02:15:37 PM
4 Pages
DEED

Kathleen A Marchione Saratoga Co Clerk RECORDED

WARRANTY DEED WITH FULL COVENANTS

THIS INDENTURE, made the 24th day of June, Two Thousand Eight
between

PABO REALTY, LLC, a New York State Limited Liability Company with principal offices at 1468 Sedgefield Drive, Murrels Inlet, South Carolina

party of the first part and

LYNCHY'S TAVERN, INC., a New York State Corporation with principal offices at 68 Middle Road, Saratoga Springs, New York

party of the second part,

WITNESSETH, that the party of the first part, in consideration of One Dollar, lawful money of the United States, paid by the party of the second part, does hereby grant and release unto the party of the second part, the heirs or successors and assigns of the party of the second part forever,

SEE ATTACHED SCHEDULE A

TOGETHER with all right, title and interest, if any, of the party of the first part in and to any streets and roads abutting the above described premises to the center lines thereof,

TOGETHER with the appurtenances and all the estate and rights of the party of the first part in and to said premises,

TO HAVE AND TO HOLD the premises herein granted unto the party of the second part, the heirs or successors and assigns of the party of the second part forever.

AND the party of the first part, in compliance with Section 13 of the Lien Law, covenants that the party of the first part will receive the consideration for this conveyance and will hold the right to receive such consideration as a trust fund to be applied first for the purpose of paying the costs of the improvement and will apply the same first to the payment of the cost of the improvement before using any part of the total of the same for any other purpose.

AND the party of the first part covenants as follows:

FIRST. That said party of the first part is seized of the said premises in fee simple, and has good right to convey the same;

SECOND. That the party of the second part shall quietly enjoy the said premises;

THIRD. That the said premises are free from encumbrances, except as aforesaid;

FOURTH. That the party of the first part will execute or procure any further necessary assurance of the title to said premises;

FIFTH. That said party of the first part will forever warrant the title to said premises.

The word "parties" shall be construed as if it read "party" whenever the sense of this indenture so requires.

IN WITNESS WHEREOF, the party of the first part has duly executed this deed the day and year first above written.

IN PRESENCE OF:

PABO REALTY, LLC

By: _____
Robert Paseka

STATE OF SOUTH CAROLINA)
) ss.:
COUNTY OF) Horry

On the 24 day of June in the year 2008 before me, the undersigned, personally appeared Robert Paseka personally known to me or proved to me on the basis of satisfactory evidence to be the individual whose name is subscribed to the within instrument and acknowledged to me that he executed the same in his capacity, and that by his signature on the instrument, the individual, or the person upon behalf of which the individual acted, executed the instrument and that such individual made such appearance before the undersigned in Murrells Inlet, SC (insert the city or other political subdivision and the state or country or other place the acknowledgment was taken).

Kathy D. Hare
Notary Public
My Commission Expires August 8, 2015

Record and Return to:

Lynchys Tavern Inc.
68 Middle Rd.
Saratoga Springs NY 12866

ALL THAT CERTAIN PARCEL OF LAND, situate in the City of Saratoga Springs, Saratoga County, New York, lying on the easterly side of Putnam Street, being bounded and described as follows:

BEGINNING at a point in the east line of Putnam Street, situate S. 08° 46' 20" W. a distance of 105.55 feet along said easterly line from its intersection with the southerly line of Caroline Street, said point also being 33.98 feet southerly of the northwest corner of lands described in Book 335 of Deeds at Page 587; thence running from said point of beginning S. 84° 14' 35" E. along lands now owned by party of the first part 71.17 feet to a point; thence running S. 32° 20' 20" W. 36.75 feet to a point; thence running N. 83° 09' 10" W. 56.41 feet to a point on the easterly line of Putnam Street, thence running N. 08° 46' 20" E. 31.83 feet to the point of beginning.

The bulk of said premises are a portion of the property described in the first parcel of a deed conveyed by Catherine Jean Sperry executrix of the estate of Charles B. Sperry to Catherine Jean Sperry by deed recorded in the Saratoga County Clerk's Office on October 27, 1966 in Book 799 at Page 21. The small northwest portion of said premises are the same as those described in a deed from Thomas W. Willson to Catherine J. Sperry recorded in the Saratoga County Clerk's Office March 20, 1979 in Book 992 page 984.

RESERVING to Catherine Jean Sperry a/k/a Catherine J. Sperry, her distributes and assigns an easement and the right of way for ingress and egress to and from property now owned by Catherine Jean Sperry a/k/a Catherine J. Sperry adjoining the easterly boundary of the premises conveyed herein. Said right of way and easement shall run easterly from the east line of Putnam Street, adjacent to the south wall of the building now located on the premises conveyed herein and extend through the rear of the premises conveyed herein to the West boundary of property now owned by Catherine Jean Sperry a/k/a Catherine J. Sperry to allow motor vehicles and trucks to make deliveries of merchandise and other items to the rear of the tavern property owned by Catherine Jean Sperry a/k/a Catherine J. Sperry which fronts on Caroline Street, including sufficient room for said delivery vehicles to turn around and exit through the right of way in a forward motion.

This conveyance is made subject to all restrictions, easements, covenants and conditions of record, if any, affecting said premises.

M & L Lynch Tavern
68 Middle Rd
Saratoga S.P. NY 12866

SARATOGA COUNTY PLANNING BOARD

TOM L. LEWIS
CHAIRMAN

JASON KEMPER
DIRECTOR

September 7, 2016

Kate Maynard, Principal Planner
City of Saratoga Springs
City Hall, 474 Broadway
Saratoga Springs, NY 12866

SCPB Referral Review#16-100-Site Plan Review-Lynchys Tavern/The Ice House
Site plan modification for erection of permanent tent structure to replace the temporary structure now in place.
Putnam Street (east side), south of Caroline Street (off Broadway)

Received from the City of Saratoga Springs Planning Board on September 7, 2016.

Reviewed by the Saratoga County Planning Board and staff on September 7, 2016.

Decision: No Significant County Wide or Inter Community Impact

Comment: In accordance with the Memorandum of Understanding (MOU) between the City of Saratoga Springs Planning Board and the Saratoga County Planning Board, the above-noted Site Plan has been reviewed by staff and with necessary concurrence has been deemed to present no significant countywide impacts.

Michael Valentine, Senior Planner
Authorized Agent for Saratoga County

DISCLAIMER: Recommendations made by the Saratoga County Planning Board on referrals and subdivisions are based upon the receipt and review of a "full statement of such proposed action" provided directly to SCPB by the municipal referring agency as stated under General Municipal Law section 239. A determination of action is rendered by the SCPB based upon the completeness and accuracy of information presented by its staff. The SCPB cannot be accountable for a decision rendered through incomplete or inaccurate information received as part of the complete statement.

50 WEST HIGH STREET
BALLSTON SPA, NY 12020

(518) 884-4705 PHONE
(518) 884-4780 FAX

[FOR OFFICE USE]

(Application #)

(Date received)

CITY OF SARATOGA SPRINGS

PLANNING BOARD

City Hall - 474 Broadway
Saratoga Springs, New York 12866-2296
Tel: 518-587-3550 fax: 518-580-9480
http://www.saratoga-springs.org

APPLICATION FOR:
SUBDIVISION APPROVAL

(Rev: 07/2016)

*****Application Check List - All submissions must include completed application check list and all required items.**

Project Name: 21 Park Place Subdivision

Property Address/Location: 21 Park Place; Corner of Park Pl. & Regent St.

Tax Parcel #: 165.84-1-1 (for example: 165.52-4-37) Zoning District: UR-4

Total Acres: 0.726 acres Land to be Subdivided Into: 2 Lots

	APPLICANT(S)*	OWNER(S) *(If not applicant)*	ATTORNEY/AGENT
Name	David Guarino / Linda Haner	(same)	Agent: Engineering America Co.
Address	[redacted]		76 Washington St. Saratoga Springs, NY 12866
Phone	[redacted]		[redacted]
Email			

Identify primary contact person: ☐ Applicant ☐ Owner ■ Agent

* An applicant must be the property owner, lessee, or one with an option to lease or purchase the property in question.

Application Fee: A check for the total amount below payable to: "Commissioner of Finance" MUST accompany this application.

☐ Sketch Plan – $400

☐ Preliminary Subdivision Plat Approval
1-20 Lots $400
21-50 Lots $600
51+ Lots $1,000
Fee submitted $ _____

☑ Final Subdivision Plat Approval
Residential - $1,000 plus $100/lot $ 1200.00

Non-Residential - $1,500/lot $ _____

☐ Final Approval Modification
Residential- $250 $ _____

Non-Residential- $500 $ _____

Submission Deadline – Check City's website (www.saratoga-springs.org) for application deadlines and meeting dates.

Does any City officer, Does any City officer, employee or family member thereof have a financial interest (as defined by General Municipal Law Section 809) in this application? YES_____ NO ✓. If YES, a statement disclosing the name, residence, nature and extent of this interest must be filed with this application.

I, the undersigned owner or purchaser under contract for the property, hereby request Subdivision consideration by the Planning Board for the identified property above. I agree to meet all requirements under the Subdivision Regulations for the City of Saratoga Springs.

Furthermore, I hereby authorize members of the Planning Board and designated City staff to enter the property associated with this application for purposes of conducting any necessary site inspections relating to this application.

Applicant Signature: David Dunn Date: 9-23-16

If applicant is not current owner, owner must also sign.

Owner Signature: _____ Date: _____

CITY OF SARATOGA SPRINGS

PLANNING BOARD

City Hall - 474 Broadway
Saratoga Springs, New York 12866-2296
Tel: 518-587-3550 fax: 518-580-9480
http://www.saratoga-springs.org

[FOR OFFICE USE]

_____
(Application #)

_____
(Date received)

Rev.05/2016

PRELIMINARY/ FINAL SUBDIVISION APPROVAL REQUIRED SUBMITTAL CHECKLIST

1. Project Name: 21 Park Place Subdivision

2. Checklist Prepared By: Tonya Yasenchak / Engineering America Co Date: September 22, 2016

Listed below are the minimum submittal requirements as set forth in The City of Saratoga Springs' Subdivision Regulations. The Planning Board reserves the right to request additional information, as necessary, to support an application. The Board also reserves the right to reject the application if these minimum requirements are not met. Please complete the checklist below and provide with your submission.

REQUIRED ITEMS: ***3 hard copies and 1 digital copy of ALL materials are required.**

CHECK EACH ITEM	
☑	1. Completed Subdivision Application (3 hard copies - *1 w/original signature - and 1 digital) and Fee
☑	2. SEQR Environmental Assessment Form- short or long form as required by action.
☑	3. Set of plans including: (3) large scale plans (sheets must be 24" x 36", drawn to a scale of not more than 1"=50 feet). One digital version of **all** submittal items (pdf) shall be provided.
☑	4. Basic or Full Storm Water Pollution Prevention Plan as required per City Code Chapter 242.
☑	5. Copy of signed DPW water connection agreement for all projects involving new water connections to the City system
☑	6. Engineering Report for Water and Sanitary
☑	7. Complete Streets Checklist
☑	8. Project Cost Estimate-Quantities of work items and estimate of costs

REQUIRED ITEMS ON SUBDIVISION PLAT, AS APPLICABLE:

☑	1. Name of Subdivision
☑	3. Property line survey prepared by a licensed land surveyor. Subdivision plat must reference such survey with all corners set and marked on plan. Reference NGVD 1929 datum. A copy of the original property survey must also be included.
☑	4. North arrow and map scale

☑	5. Parcel tax map number
☑	6. Site location map
☑	7. Site vicinity map (all features within 300 feet of property)
☑	8. Identification of current zoning with corresponding area requirements
☑	9. Building setback lines, either listed or shown on plans
☑	10. Title block with subdivision name; name and address of applicant; and name and address of property owner (if different)
☑	11. Name, address and phone number of subdivision surveyor and/or engineer
☑	12. Names of all adjacent property owners within 300 feet (include both sides of street)
☑	13. Identification of size, elevations, material, and slopes of all existing and proposed utilities within 400 ft of site.
☑	14. Parcel street address (existing and any proposed postal addresses)
Yes ☑ No ☐ N/A ☐	15. Identification of existing or proposed easements, covenants or legal rights-of-way on this property
☑ ☐ ☐	16. References to all prior variances or special use permits
☑ ☐ ☐	17. Existing and proposed contours and spot grades (at 2 foot intervals)
☐ ☐ ☑	18. Identification of all watercourses, designated State wetlands, buffers, Federal wetlands, floodplains, rock outcroppings, etc.
☑ ☐ ☐	19. Identification of all existing or proposed sidewalks or pedestrian paths (show type, size and condition of existing sidewalks)
☑ ☐ ☐	20. Location, design specifications and construction material for all proposed site improvements (drains, culverts, retaining walls, berms, fences, etc.)
☑ ☐ ☐	21. Location and distance to fire hydrant
☑ ☐ ☐	22. Erosion and sediment control plan – including designated concrete truck washout area
☐ ☐ ☑	23. Approximate location, dimensions and areas for proposed lots and proposed public recreational land
☑ ☐ ☐	24. Proposal for utility systems and lateral connections
☐ ☐ ☑	25. Location and width of proposed streets

Full Environmental Assessment Form
Part 1 - Project and Setting

Instructions for Completing Part 1

Part 1 is to be completed by the applicant or project sponsor. Responses become part of the application for approval or funding, are subject to public review, and may be subject to further verification.

Complete Part 1 based on information currently available. If additional research or investigation would be needed to fully respond to any item, please answer as thoroughly as possible based on current information; indicate whether missing information does not exist, or is not reasonably available to the sponsor; and, when possible, generally describe work or studies which would be necessary to update or fully develop that information.

Applicants/sponsors must complete all items in Sections A & B. In Sections C, D & E, most items contain an initial question that must be answered either "Yes" or "No". If the answer to the initial question is "Yes", complete the sub-questions that follow. If the answer to the initial question is "No", proceed to the next question. Section F allows the project sponsor to identify and attach any additional information. Section G requires the name and signature of the project sponsor to verify that the information contained in Part 1is accurate and complete.

A. Project and Sponsor Information.

Name of Action or Project: 21 Park Place Sub-Division		
Project Location (describe, and attach a general location map): Northeast corner of Park Place and Regent Streets, Saratoga Springs, NY		
Brief Description of Proposed Action (include purpose or need): To sub-divide .72 acre lot into two parcels. The lot with an existing 3-family house will be 19,153 sq ft, and the smaller corner lot without improvements will be 12,483 sq ft. The purpose is to create a second build able lot from the original 3/4 acre downtown lot.		
Name of Applicant/Sponsor: David Guarino and Linda Haner	Telephone: [redacted] E-Mail: [redacted]	
Address: [redacted]		
City/PO: [redacted]	State: [redacted]	Zip Code: [redacted]
Project Contact (if not same as sponsor; give name and title/role):	Telephone: E-Mail:	
Address:		
City/PO:	State:	Zip Code:
Property Owner (if not same as sponsor):	Telephone: E-Mail:	
Address:		
City/PO:	State:	Zip Code:

B. Government Approvals

B. Government Approvals, Funding, or Sponsorship. ("Funding" includes grants, loans, tax relief, and any other forms of financial assistance.)		
Government Entity	**If Yes: Identify Agency and Approval(s) Required**	**Application Date (Actual or projected)**
a. City Council, Town Board, or Village Board of Trustees ☐Yes☑No		
b. City, Town or Village Planning Board or Commission ☑Yes☐No	City of Saratoga Springs Planning Board	6/23/2016
c. City Council, Town or Village Zoning Board of Appeals ☐Yes☑No		
d. Other local agencies ☐Yes☑No		
e. County agencies ☑Yes☐No	Saratoga County Planning Board	8/15/16
f. Regional agencies ☐Yes☑No		
g. State agencies ☐Yes☑No		
h. Federal agencies ☐Yes☑No		
i. Coastal Resources. *i.* Is the project site within a Coastal Area, or the waterfront area of a Designated Inland Waterway? ☐Yes☑No *ii.* Is the project site located in a community with an approved Local Waterfront Revitalization Program? ☐Yes☑No *iii.* Is the project site within a Coastal Erosion Hazard Area? ☐Yes☑No		

C. Planning and Zoning

C.1. Planning and zoning actions.
Will administrative or legislative adoption, or amendment of a plan, local law, ordinance, rule or regulation be the only approval(s) which must be granted to enable the proposed action to proceed? ☐Yes☑No • **If Yes,** complete sections C, F and G. • **If No,** proceed to question C.2 and complete all remaining sections and questions in Part 1
C.2. Adopted land use plans.
a. Do any municipally- adopted (city, town, village or county) comprehensive land use plan(s) include the site where the proposed action would be located? ☑Yes☐No If Yes, does the comprehensive plan include specific recommendations for the site where the proposed action would be located? ☑Yes☐No
b. Is the site of the proposed action within any local or regional special planning district (for example: Greenway Brownfield Opportunity Area (BOA); designated State or Federal heritage area; watershed management plan; or other?) ☑Yes☐No If Yes, identify the plan(s): NYS Heritage Areas:Mohawk Valley Heritage Corridor, Saratoga
c. Is the proposed action located wholly or partially within an area listed in an adopted municipal open space plan, or an adopted municipal farmland protection plan? ☐Yes☑No If Yes, identify the plan(s):

C.3. Zoning

a. Is the site of the proposed action located in a municipality with an adopted zoning law or ordinance. ☑ Yes ☐ No
If Yes, what is the zoning classification(s) including any applicable overlay district?
Urban Residential 4 (UR-4)

b. Is the use permitted or allowed by a special or conditional use permit? ☐ Yes ☑ No

c. Is a zoning change requested as part of the proposed action? ☐ Yes ☑ No
If Yes,
i. What is the proposed new zoning for the site? _____

C.4. Existing community services.

a. In what school district is the project site located? Saratoga Springs Enlarged School District

b. What police or other public protection forces serve the project site?
City of Saratoga Springs Police Dept

c. Which fire protection and emergency medical services serve the project site?
City of Saratoga Springs Fire Dept and Emergency Squad

d. What parks serve the project site?
Congress Park

D. Project Details

D.1. Proposed and Potential Development

a. What is the general nature of the proposed action (e.g., residential, industrial, commercial, recreational; if mixed, include all components)? Residential

b. a. Total acreage of the site of the proposed action? .72 acres
b. Total acreage to be physically disturbed? .084 acres
c. Total acreage (project site and any contiguous properties) owned or controlled by the applicant or project sponsor? .72 acres

c. Is the proposed action an expansion of an existing project or use? ☐ Yes ☑ No
i. If Yes, what is the approximate percentage of the proposed expansion and identify the units (e.g., acres, miles, housing units, square feet)? % _____ Units: _____

d. Is the proposed action a subdivision, or does it include a subdivision? ☑ Yes ☐ No
If Yes,
i. Purpose or type of subdivision? (e.g., residential, industrial, commercial; if mixed, specify types)
Residential
ii. Is a cluster/conservation layout proposed? ☐ Yes ☑ No
iii. Number of lots proposed? 2
iv. Minimum and maximum proposed lot sizes? Minimum 12,112 Maximum 19,524

e. Will proposed action be constructed in multiple phases? ☐ Yes ☑ No
i. If No, anticipated period of construction: 10 months
ii. If Yes:
- Total number of phases anticipated _____
- Anticipated commencement date of phase 1 (including demolition) _____ month _____ year
- Anticipated completion date of final phase _____ month _____ year
- Generally describe connections or relationships among phases, including any contingencies where progress of one phase may determine timing or duration of future phases: _____

f. Does the project include new residential uses? ☑ Yes ☐ No
If Yes, show numbers of units proposed.

	One Family	Two Family	Three Family	Multiple Family (four or more)
Initial Phase		1		
At completion of all phases		1		

g. Does the proposed action include new non-residential construction (including expansions)? ☐ Yes ☑ No
If Yes,
i. Total number of structures _____
ii. Dimensions (in feet) of largest proposed structure: _____ height; _____ width; and _____ length
iii. Approximate extent of building space to be heated or cooled: _____ square feet

h. Does the proposed action include construction or other activities that will result in the impoundment of any liquids, such as creation of a water supply, reservoir, pond, lake, waste lagoon or other storage? ☐ Yes ☑ No
If Yes,
i. Purpose of the impoundment: _____
ii. If a water impoundment, the principal source of the water: ☐ Ground water ☐ Surface water streams ☐ Other specify: _____
iii. If other than water, identify the type of impounded/contained liquids and their source. _____
iv. Approximate size of the proposed impoundment. Volume: _____ million gallons; surface area: _____ acres
v. Dimensions of the proposed dam or impounding structure: _____ height; _____ length
vi. Construction method/materials for the proposed dam or impounding structure (e.g., earth fill, rock, wood, concrete): _____

D.2. Project Operations

a. Does the proposed action include any excavation, mining, or dredging, during construction, operations, or both? (Not including general site preparation, grading or installation of utilities or foundations where all excavated materials will remain onsite) ☑ Yes ☐ No
If Yes:
i. What is the purpose of the excavation or dredging? _____
ii. How much material (including rock, earth, sediments, etc.) is proposed to be removed from the site?
- Volume (specify tons or cubic yards): ~ 1000 cubic yards
- Over what duration of time? 1-2 months

iii. Describe nature and characteristics of materials to be excavated or dredged, and plans to use, manage or dispose of them.
Soil remainder to be trucked to private property on Daniels Road, Town on Greenfield, NY.
iv. Will there be onsite dewatering or processing of excavated materials? ☐ Yes ☑ No
If yes, describe. _____
v. What is the total area to be dredged or excavated? .191 acres
vi. What is the maximum area to be worked at any one time? .084 acres
vii. What would be the maximum depth of excavation or dredging? 9 feet
viii. Will the excavation require blasting? ☐ Yes ☑ No
ix. Summarize site reclamation goals and plan:
Reuse topsoil for lawns and gardens. Plant ornamental street trees.

b. Would the proposed action cause or result in alteration of, increase or decrease in size of, or encroachment into any existing wetland, waterbody, shoreline, beach or adjacent area? ☐ Yes ☑ No
If Yes:
i. Identify the wetland or waterbody which would be affected (by name, water index number, wetland map number or geographic description): _____

ii. Describe how the proposed action would affect that waterbody or wetland, e.g. excavation, fill, placement of structures, or alteration of channels, banks and shorelines. Indicate extent of activities, alterations and additions in square feet or acres:

iii. Will proposed action cause or result in disturbance to bottom sediments? ☐Yes☐No
If Yes, describe:

iv. Will proposed action cause or result in the destruction or removal of aquatic vegetation? ☐Yes☐No
If Yes:

- acres of aquatic vegetation proposed to be removed:
- expected acreage of aquatic vegetation remaining after project completion:
- purpose of proposed removal (e.g. beach clearing, invasive species control, boat access):
- proposed method of plant removal:
- if chemical/herbicide treatment will be used, specify product(s):

v. Describe any proposed reclamation/mitigation following disturbance:

c. Will the proposed action use, or create a new demand for water? ☑Yes☐No
If Yes:

i. Total anticipated water usage/demand per day: 660 gallons/day

ii. Will the proposed action obtain water from an existing public water supply? ☑Yes☐No
If Yes:

- Name of district or service area: City of Saratoga SPrings
- Does the existing public water supply have capacity to serve the proposal? ☑Yes☐No
- Is the project site in the existing district? ☑Yes☐No
- Is expansion of the district needed? ☐Yes☑No
- Do existing lines serve the project site? ☑Yes☐No

iii. Will line extension within an existing district be necessary to supply the project? ☐Yes☑No
If Yes:

- Describe extensions or capacity expansions proposed to serve this project:
- Source(s) of supply for the district:

iv. Is a new water supply district or service area proposed to be formed to serve the project site? ☐Yes☑No
If, Yes:

- Applicant/sponsor for new district:
- Date application submitted or anticipated:
- Proposed source(s) of supply for new district:

v. If a public water supply will not be used, describe plans to provide water supply for the project:

vi. If water supply will be from wells (public or private), maximum pumping capacity: _____ gallons/minute.

d. Will the proposed action generate liquid wastes? ☑Yes☐No
If Yes:

i. Total anticipated liquid waste generation per day: 660 gallons/day

ii. Nature of liquid wastes to be generated (e.g., sanitary wastewater, industrial; if combination, describe all components and approximate volumes or proportions of each):
sanitary/wastewater ~25%, graywater ~75%

iii. Will the proposed action use any existing public wastewater treatment facilities? ☑Yes☐No
If Yes:

- Name of wastewater treatment plant to be used: Saratoga County Wastewater Treatment Plant
- Name of district: Saratoga County Sewer District
- Does the existing wastewater treatment plant have capacity to serve the project? ☑Yes☐No
- Is the project site in the existing district? ☑Yes☐No
- Is expansion of the district needed? ☐Yes☑No

- Do existing sewer lines serve the project? ☑Yes ☐No
- Will line extension within an existing district be necessary to serve the project? ☐Yes ☑No

  If Yes:
  - Describe extensions or capacity expansions proposed to serve this project: _____

iv. Will a new wastewater (sewage) treatment district be formed to serve the project site? ☐Yes ☑No

If Yes:
- Applicant/sponsor for new district: _____
- Date application submitted or anticipated: _____
- What is the receiving water for the wastewater discharge? _____

v. If public facilities will not be used, describe plans to provide wastewater treatment for the project, including specifying proposed receiving water (name and classification if surface discharge, or describe subsurface disposal plans):

vi. Describe any plans or designs to capture, recycle or reuse liquid waste: _____

e. Will the proposed action disturb more than one acre and create stormwater runoff, either from new point sources (i.e. ditches, pipes, swales, curbs, gutters or other concentrated flows of stormwater) or non-point source (i.e. sheet flow) during construction or post construction? ☐Yes ☑No

If Yes:

i. How much impervious surface will the project create in relation to total size of project parcel?

_____ Square feet or _____ acres (impervious surface)

_____ Square feet or _____ acres (parcel size)

ii. Describe types of new point sources. _____

iii. Where will the stormwater runoff be directed (i.e. on-site stormwater management facility/structures, adjacent properties, groundwater, on-site surface water or off-site surface waters)?

- If to surface waters, identify receiving water bodies or wetlands: _____
- Will stormwater runoff flow to adjacent properties? ☐Yes ☐No

iv. Does proposed plan minimize impervious surfaces, use pervious materials or collect and re-use stormwater? ☐Yes ☐No

f. Does the proposed action include, or will it use on-site, one or more sources of air emissions, including fuel combustion, waste incineration, or other processes or operations? ☐Yes ☑No

If Yes, identify:

i. Mobile sources during project operations (e.g., heavy equipment, fleet or delivery vehicles)

ii. Stationary sources during construction (e.g., power generation, structural heating, batch plant, crushers)

iii. Stationary sources during operations (e.g., process emissions, large boilers, electric generation)

g. Will any air emission sources named in D.2.f (above), require a NY State Air Registration, Air Facility Permit, or Federal Clean Air Act Title IV or Title V Permit? ☐Yes ☑No

If Yes:

i. Is the project site located in an Air quality non-attainment area? (Area routinely or periodically fails to meet ambient air quality standards for all or some parts of the year) ☐Yes ☑No

ii. In addition to emissions as calculated in the application, the project will generate:
- _____Tons/year (short tons) of Carbon Dioxide (CO_2)
- _____Tons/year (short tons) of Nitrous Oxide (N_2O)
- _____Tons/year (short tons) of Perfluorocarbons (PFCs)
- _____Tons/year (short tons) of Sulfur Hexafluoride (SF_6)
- _____Tons/year (short tons) of Carbon Dioxide equivalent of Hydroflourocarbons (HFCs)
- _____Tons/year (short tons) of Hazardous Air Pollutants (HAPs)

h. Will the proposed action generate or emit methane (including, but not limited to, sewage treatment plants, landfills, composting facilities)? ☐Yes ☑No

If Yes:

i. Estimate methane generation in tons/year (metric): _____

ii. Describe any methane capture, control or elimination measures included in project design (e.g., combustion to generate heat or electricity, flaring): _____

i. Will the proposed action result in the release of air pollutants from open-air operations or processes, such as quarry or landfill operations? ☐Yes ☑No

If Yes: Describe operations and nature of emissions (e.g., diesel exhaust, rock particulates/dust):

_____

j. Will the proposed action result in a substantial increase in traffic above present levels or generate substantial new demand for transportation facilities or services? ☐Yes ☑No

If Yes:

i. When is the peak traffic expected (Check all that apply): ☐ Morning ☐ Evening ☐Weekend ☐ Randomly between hours of _____ to _____.

ii. For commercial activities only, projected number of semi-trailer truck trips/day: _____

iii. Parking spaces: Existing _____ Proposed _____ Net increase/decrease _____

iv. Does the proposed action include any shared use parking? ☐Yes ☐No

v. If the proposed action includes any modification of existing roads, creation of new roads or change in existing access, describe:

_____

vi. Are public/private transportation service(s) or facilities available within ½ mile of the proposed site? ☐Yes ☐No

vii Will the proposed action include access to public transportation or accommodations for use of hybrid, electric or other alternative fueled vehicles? ☐Yes ☐No

viii. Will the proposed action include plans for pedestrian or bicycle accommodations for connections to existing pedestrian or bicycle routes? ☐Yes ☐No

k. Will the proposed action (for commercial or industrial projects only) generate new or additional demand for energy? ☐Yes ☐No

If Yes:

i. Estimate annual electricity demand during operation of the proposed action: _____

ii. Anticipated sources/suppliers of electricity for the project (e.g., on-site combustion, on-site renewable, via grid/local utility, or other):

_____

iii. Will the proposed action require a new, or an upgrade to, an existing substation? ☐Yes ☐No

l. Hours of operation. Answer all items which apply.

i. During Construction:

- Monday - Friday: 8am - 6pm
- Saturday: 9am - 5pm
- Sunday: _____
- Holidays: _____

ii. During Operations:

- Monday - Friday: _____
- Saturday: _____
- Sunday: _____
- Holidays: _____

m. Will the proposed action produce noise that will exceed existing ambient noise levels during construction, operation, or both? ☐ Yes ☑ No

If yes:

i. Provide details including sources, time of day and duration:

ii. Will proposed action remove existing natural barriers that could act as a noise barrier or screen? ☐ Yes ☑ No

Describe:

n.. Will the proposed action have outdoor lighting? ☑ Yes ☐ No

If yes:

i. Describe source(s), location(s), height of fixture(s), direction/aim, and proximity to nearest occupied structures:

Front and side door, and external garage door lights. House lights at 8 feet open direction, garage lights at 10 feet open direction. All lighting at least 50 from nearest residence.

ii. Will proposed action remove existing natural barriers that could act as a light barrier or screen? ☐ Yes ☑ No

Describe:

o. Does the proposed action have the potential to produce odors for more than one hour per day? ☐ Yes ☑ No

If Yes, describe possible sources, potential frequency and duration of odor emissions, and proximity to nearest occupied structures:

p. Will the proposed action include any bulk storage of petroleum (combined capacity of over 1,100 gallons) or chemical products 185 gallons in above ground storage or any amount in underground storage? ☐ Yes ☑ No

If Yes:

i. Product(s) to be stored

ii. Volume(s) _____ per unit time _____ (e.g., month, year)

iii. Generally describe proposed storage facilities:

q. Will the proposed action (commercial, industrial and recreational projects only) use pesticides (i.e., herbicides, insecticides) during construction or operation? ☐ Yes ☐ No

If Yes:

i. Describe proposed treatment(s):

ii. Will the proposed action use Integrated Pest Management Practices? ☐ Yes ☐ No

r. Will the proposed action (commercial or industrial projects only) involve or require the management or disposal of solid waste (excluding hazardous materials)? ☐ Yes ☐ No

If Yes:

i. Describe any solid waste(s) to be generated during construction or operation of the facility:

- Construction: _____ tons per _____ (unit of time)
- Operation : _____ tons per _____ (unit of time)

ii. Describe any proposals for on-site minimization, recycling or reuse of materials to avoid disposal as solid waste:

- Construction:
- Operation:

iii. Proposed disposal methods/facilities for solid waste generated on-site:

- Construction:
- Operation:

s. Does the proposed action include construction or modification of a solid waste management facility? ☐ Yes ☑ No

If Yes:

i. Type of management or handling of waste proposed for the site (e.g., recycling or transfer station, composting, landfill, or other disposal activities): _____

ii. Anticipated rate of disposal/processing:

- _____ Tons/month, if transfer or other non-combustion/thermal treatment, or
- _____ Tons/hour, if combustion or thermal treatment

iii. If landfill, anticipated site life: _____ years

t. Will proposed action at the site involve the commercial generation, treatment, storage, or disposal of hazardous waste? ☐ Yes ☑ No

If Yes:

i. Name(s) of all hazardous wastes or constituents to be generated, handled or managed at facility: _____

ii. Generally describe processes or activities involving hazardous wastes or constituents: _____

iii. Specify amount to be handled or generated _____ tons/month

iv. Describe any proposals for on-site minimization, recycling or reuse of hazardous constituents: _____

v. Will any hazardous wastes be disposed at an existing offsite hazardous waste facility? ☐ Yes ☐ No

If Yes: provide name and location of facility: _____

If No: describe proposed management of any hazardous wastes which will not be sent to a hazardous waste facility:

E. Site and Setting of Proposed Action

E.1. Land uses on and surrounding the project site

a. Existing land uses.

i. Check all uses that occur on, adjoining and near the project site.

☑ Urban ☐ Industrial ☐ Commercial ☐ Residential (suburban) ☐ Rural (non-farm)
☐ Forest ☐ Agriculture ☐ Aquatic ☑ Other (specify): Urban Residential

ii. If mix of uses, generally describe:

b. Land uses and covertypes on the project site.

Land use or Covertype	Current Acreage	Acreage After Project Completion	Change (Acres +/-)
• Roads, buildings, and other paved or impervious surfaces	.196	.280	.084
• Forested			
• Meadows, grasslands or brushlands (non-agricultural, including abandoned agricultural)			
• Agricultural (includes active orchards, field, greenhouse etc.)			
• Surface water features (lakes, ponds, streams, rivers, etc.)			
• Wetlands (freshwater or tidal)			
• Non-vegetated (bare rock, earth or fill)			
• Other Describe: _____			

c. Is the project site presently used by members of the community for public recreation? ☐ Yes ☑ No

i. If Yes: explain: _____

d. Are there any facilities serving children, the elderly, people with disabilities (e.g., schools, hospitals, licensed day care centers, or group homes) within 1500 feet of the project site? ☑ Yes ☐ No

If Yes,

i. Identify Facilities:

Waldorf Elementary School, Beagle Children's Day School, SUNY Empire College, Presbyterian Church

e. Does the project site contain an existing dam? ☐ Yes ☑ No

If Yes:

i. Dimensions of the dam and impoundment:

- Dam height: _____ feet
- Dam length: _____ feet
- Surface area: _____ acres
- Volume impounded: _____ gallons OR acre-feet

ii. Dam's existing hazard classification: _____

iii. Provide date and summarize results of last inspection:

f. Has the project site ever been used as a municipal, commercial or industrial solid waste management facility, or does the project site adjoin property which is now, or was at one time, used as a solid waste management facility? ☐ Yes ☑ No

If Yes:

i. Has the facility been formally closed? ☐ Yes ☐ No

- If yes, cite sources/documentation: _____

ii. Describe the location of the project site relative to the boundaries of the solid waste management facility:

iii. Describe any development constraints due to the prior solid waste activities: _____

g. Have hazardous wastes been generated, treated and/or disposed of at the site, or does the project site adjoin property which is now or was at one time used to commercially treat, store and/or dispose of hazardous waste? ☐ Yes ☑ No

If Yes:

i. Describe waste(s) handled and waste management activities, including approximate time when activities occurred:

h. Potential contamination history. Has there been a reported spill at the proposed project site, or have any remedial actions been conducted at or adjacent to the proposed site? ☐ Yes ☑ No

If Yes:

i. Is any portion of the site listed on the NYSDEC Spills Incidents database or Environmental Site Remediation database? Check all that apply: ☐ Yes ☐ No

☐ Yes – Spills Incidents database — Provide DEC ID number(s): _____

☐ Yes – Environmental Site Remediation database — Provide DEC ID number(s): _____

☐ Neither database

ii. If site has been subject of RCRA corrective activities, describe control measures: _____

iii. Is the project within 2000 feet of any site in the NYSDEC Environmental Site Remediation database? ☐ Yes ☐ No

If yes, provide DEC ID number(s): _____

iv. If yes to (i), (ii) or (iii) above, describe current status of site(s):

v. Is the project site subject to an institutional control limiting property uses? ☐ Yes ☑ No

- If yes, DEC site ID number: _____
- Describe the type of institutional control (e.g., deed restriction or easement): _____
- Describe any use limitations: _____
- Describe any engineering controls: _____
- Will the project affect the institutional or engineering controls in place? ☐ Yes ☐ No
- Explain: _____

E.2. Natural Resources On or Near Project Site

a. What is the average depth to bedrock on the project site? > 6 feet

b. Are there bedrock outcroppings on the project site? ☐ Yes ☑ No
If Yes, what proportion of the site is comprised of bedrock outcroppings? _____ %

c. Predominant soil type(s) present on project site: Windsor loamy sand 100 %

d. What is the average depth to the water table on the project site? Average: _____ feet

e. Drainage status of project site soils:
☑ Well Drained: 100 % of site
☐ Moderately Well Drained: _____ % of site
☐ Poorly Drained _____ % of site

f. Approximate proportion of proposed action site with slopes:
☑ 0-10%: 100 % of site
☐ 10-15%: _____ % of site
☐ 15% or greater: _____ % of site

g. Are there any unique geologic features on the project site? ☐ Yes ☑ No
If Yes, describe: _____

h. Surface water features.

i. Does any portion of the project site contain wetlands or other waterbodies (including streams, rivers, ponds or lakes)? ☐ Yes ☑ No

ii. Do any wetlands or other waterbodies adjoin the project site? ☐ Yes ☑ No

If Yes to either *i* or *ii*, continue. If No, skip to E.2.i.

iii. Are any of the wetlands or waterbodies within or adjoining the project site regulated by any federal, state or local agency? ☐ Yes ☑ No

iv. For each identified regulated wetland and waterbody on the project site, provide the following information:

- Streams: Name _____ Classification _____
- Lakes or Ponds: Name _____ Classification _____
- Wetlands: Name _____ Approximate Size _____
- Wetland No. (if regulated by DEC) _____

v. Are any of the above water bodies listed in the most recent compilation of NYS water quality-impaired waterbodies? ☐ Yes ☑ No

If yes, name of impaired water body/bodies and basis for listing as impaired: _____

i. Is the project site in a designated Floodway? ☐ Yes ☑ No

j. Is the project site in the 100 year Floodplain? ☐ Yes ☑ No

k. Is the project site in the 500 year Floodplain? ☐ Yes ☑ No

l. Is the project site located over, or immediately adjoining, a primary, principal or sole source aquifer? ☐ Yes ☑ No
If Yes:

i. Name of aquifer: _____

m. Identify the predominant wildlife species that occupy or use the project site: _____

n. Does the project site contain a designated significant natural community? ☐Yes ☑No
If Yes:
i. Describe the habitat/community (composition, function, and basis for designation): _____
ii. Source(s) of description or evaluation: _____
iii. Extent of community/habitat:
- Currently: _____ acres
- Following completion of project as proposed: _____ acres
- Gain or loss (indicate + or -): _____ acres

o. Does project site contain any species of plant or animal that is listed by the federal government or NYS as endangered or threatened, or does it contain any areas identified as habitat for an endangered or threatened species? ☐Yes ☑No

p. Does the project site contain any species of plant or animal that is listed by NYS as rare, or as a species of special concern? ☐Yes ☑No

q. Is the project site or adjoining area currently used for hunting, trapping, fishing or shell fishing? ☐Yes ☑No
If yes, give a brief description of how the proposed action may affect that use: _____

E.3. Designated Public Resources On or Near Project Site

a. Is the project site, or any portion of it, located in a designated agricultural district certified pursuant to Agriculture and Markets Law, Article 25-AA, Section 303 and 304? ☐Yes ☑No
If Yes, provide county plus district name/number: _____

b. Are agricultural lands consisting of highly productive soils present? ☐Yes ☑No
i. If Yes: acreage(s) on project site? _____
ii. Source(s) of soil rating(s): _____

c. Does the project site contain all or part of, or is it substantially contiguous to, a registered National Natural Landmark? ☐Yes ☑No
If Yes:
i. Nature of the natural landmark: ☐ Biological Community ☐ Geological Feature
ii. Provide brief description of landmark, including values behind designation and approximate size/extent: _____

d. Is the project site located in or does it adjoin a state listed Critical Environmental Area? ☐Yes ☑No
If Yes:
i. CEA name: _____
ii. Basis for designation: _____
iii. Designating agency and date: _____

e. Does the project site contain, or is it substantially contiguous to, a building, archaeological site, or district which is listed on, or has been nominated by the NYS Board of Historic Preservation for inclusion on, the State or National Register of Historic Places? ☑ Yes ☐ No

If Yes:

i. Nature of historic/archaeological resource: ☐ Archaeological Site ☑ Historic Building or District

ii. Name: Circular Street Historic District

iii. Brief description of attributes on which listing is based:

historic homes

f. Is the project site, or any portion of it, located in or adjacent to an area designated as sensitive for archaeological sites on the NY State Historic Preservation Office (SHPO) archaeological site inventory? ☑ Yes ☐ No

g. Have additional archaeological or historic site(s) or resources been identified on the project site? ☐ Yes ☑ No

If Yes:

i. Describe possible resource(s): _____

ii. Basis for identification: _____

h. Is the project site within fives miles of any officially designated and publicly accessible federal, state, or local scenic or aesthetic resource? ☑ Yes ☐ No

If Yes:

i. Identify resource: Saratoga Springs Open Space Resources 2002

ii. Nature of, or basis for, designation (e.g., established highway overlook, state or local park, state historic trail or scenic byway, etc.): City roadway entry corriders, State Park, farms

iii. Distance between project and resource: .5 - 5 miles.

i. Is the project site located within a designated river corridor under the Wild, Scenic and Recreational Rivers Program 6 NYCRR 666? ☐ Yes ☑ No

If Yes:

i. Identify the name of the river and its designation: _____

ii. Is the activity consistent with development restrictions contained in 6NYCRR Part 666? ☐ Yes ☐ No

F. Additional Information

Attach any additional information which may be needed to clarify your project.

If you have identified any adverse impacts which could be associated with your proposal, please describe those impacts plus any measures which you propose to avoid or minimize them.

G. Verification

I certify that the information provided is true to the best of my knowledge.

Applicant/Sponsor Name _____ Date 9-22-16

Signature _____ Title _____

PRINT FORM

City of Saratoga Springs Complete Streets Checklist

Saratoga Springs Complete Street Policy Vision (May 2012)

The City of Saratoga Springs Complete Streets Policy will encourage the development of a complete streets network throughout the City to create a more balanced transportation system. The Policy shall be consistent with and assist in achieving the goals and recommendations set forth in the City's Comprehensive Plan and other policy documents. The Policy shall ensure new and updated public and private projects are planned, designed, maintained and operated to enable safer, comfortable and convenient travel to the greatest extent possible for users of all abilities including pedestrians, bicyclists, motorists and transit riders.

This checklist is intended to assist the City in achieving its vision for complete streets.

Project Name: 21 Park Place Subdivision **Date:** September 22, 2016

Project Location / Limits: 21 Park Place; Corner of Park Pl. and Regent St.

Project Description: Subdivide existing 0.72 acre lot into 2 parcels

Instructions: For each box checked, please provide a brief description for how the item is addressed, not addressed, or not applicable and include supporting documentation.

Street Classification (identify street or streets within the project area)
Principal arterial ☐ Minor arterial ☐ Mixed use collector ☐ Mixed use local ☐ Residential collector ■ Residential local ■ Special use street ☐

EXISTING CONDITIONS				
Item to Be Addressed/ Checklist Consideration	**YES**	**NO**	**N/A**	**Required Description**
Existing Bicycle & Pedestrian Operations				
Do bicycle and pedestrian accommodations exist? (see page 2 for examples)	☑	☐	☐	Existing & New Sidewalks
Existing Transit Operations				
Do transit facilities exist within the study area, including bus and train stops/stations?	☐	☐	☑	CDTA bus
Is the project area on a transit route? (CDTA Service Routes)	☐	☐	☐	
Are there bicycle racks, shelters, or parking for transit riders available?	☐	☑	☑	
Existing Access and Mobility				
Do connective opportunities exist with schools, hospitals, senior care or community centers or persons with disabilities within project area?	☐	☑	☐	CDTA bus
Are there gaps inhibiting continuous access between schools, hospitals, senior care, or community centers or persons with disabilities within project area?"	☐	☑	☐	
Project Area Context				
Are there prominent landmarks, recreation, shopping, employment center, cultural centers or other key destinations that offer opportunities to connect this site?	☐	☑	☐	
Please list and/or describe planning or policy documents addressing bicyclist, pedestrian, transit, or truck/ freight use for the project area. Examples can include: City of Saratoga Springs Comprehensive Plan, City of Saratoga Springs Open Space Plan, Capital District Transportation Committee Bicycle/ Pedestrian Priority Network, City Standard Details, etc.				

PROPOSED DESIGN

Item to Be Addressed/ Checklist Consideration	YES	NO	N/A	Required Description
Complete Streets Design				
Bicyclist accommodations?	☐	☐	☐	
Pedestrian accommodations?	☑	☑	☐	accessible aprons for sidewalks
Access and Mobility accommodations?	☐	☐	☐	
Transit accommodations?	☑	☑	☐	
Truck/ freight accommodations?	☐	☑	☐	
Streetscape elements?	☑	☐	☐	2 street lights & 6 ornamental trees

Bike Facilities:	
Off-roadway bike accommodations	☐ Yes ☑ No ☐ NA
Dedicated bike lane	☐ Yes ☑ No ☐ NA
Shared-use lane	☐ Yes ☑ No ☐ NA
Shoulder	☐ Yes ☑ No ☐ NA
Acceptable actuated traffic signal bike detection, including turn lanes	☐ Yes ☑ No ☐ NA
Do signals allow adequate minimum green time for bicyclist to safely cross intersection?	☐ Yes ☐ No ☑ NA
Signage and pavement markings specific to proposed bike facilities	☐ Yes ☑ No ☐ NA
Bicycle safe inlet grates	☐ Yes ☐ No ☑ NA
Bicycle parking, eg. bike racks, bike lockers	☐ Yes ☑ No ☐ NA
Transit Facilities:	
Transit shelters	☐ Yes ☑ No ☐ NA
Bus turnouts	☐ Yes ☑ No ☐ NA
Standing pads	☐ Yes ☑ No ☐ NA
Has CDTA been contacted?	☐ Yes ☑ No ☐ NA
Access and Mobility Facilities:	
Adequate sidewalk or paved path	☑ Yes ☐ No ☐ NA
Acceptable consideration/provision for accessible pedestrian traffic signal features	☐ Yes ☑ No ☐ NA
Curb ramps, including detectable warning surface	☑ Yes ☐ No ☐ NA
Acceptable slope and cross-slope for driveway ramps, sidewalks, crossings)	☑ Yes ☐ No ☐ NA
Have conflicts been reduced among pedestrian, bicyclists, and motor vehicles (access management)?	☐ Yes ☑ No ☐ NA

Pedestrian Facilities:	
Sidewalks on both sides of the street	☑ Yes ☐ No ☐ NA
Striped crosswalks	☐ Yes ☑ No ☐ NA
Geometric modifications to reduce crossing distances such as curb extensions (e.g. bulb-outs)	☐ Yes ☑ No ☐ NA
Acceptable provision for pedestrian traffic signal features (e.g. ped. buttons)	☐ Yes ☑ No ☐ NA
Pedestrian signage for crossing & wayfinding	☐ Yes ☑ No ☐ NA
Safety islands/medians on roadways with two or more traffic lanes in each direction	☐ Yes ☑ No ☐ NA
Enhanced supplemental pedestrian treatments at uncontrolled marked crossings	☐ Yes ☑ No ☐ NA
Connectivity:	
Are there proposed connections to other bike paths, pedestrian facilities, or transit facilities?	☐ Yes ☑ No ☐ NA
Are there proposed connections to any key destinations listed on page 1?	☐ Yes ☑ No ☐ NA
Are there proposed connections to neighborhoods?	☑ Yes ☐ No ☐ NA
Streetscape Elements:	
Are streetscape elements proposed such as landscaping, street trees, planters, buffer strips, etc?	☑ Yes ☐ No ☐ NA
Pedestrian-level lighting	☑ Yes ☐ No ☐ NA
Public seating or benches	☐ Yes ☐ No ☐ NA

Design Standards and Guidelines				
Design meets guidelines such as described below for bicycle/pedestrian/bus/transit facilities?	☑ Yes	☐ No	☐ NA	Describe

***American Association of State Highway and Transportation Officials (AASHTO**) - *A Policy on Geometric Design of Highway and Streets, Guide for the Development of Bicycle Facilities and AASHTO Guide for the Planning, Design, and Operation of Pedestrian Facilities; Public Right-of-Way Accessibility Guide*(PROWAG); *Manual on Uniform Traffic Control Devices* (MUTCD); *Americans with Disabilities Act Accessibility Guidelines* (ADAAG); **National Association of City Transportation Officials (NACTO)** - *Urban Bikeway Design Guide*. **New York State Department of Transportation** – *Highway Design Manual*

City of Saratoga Springs
OFFICE OF PUBLIC WORKS
5 Lake Avenue
Saratoga Springs, New York 12866

Phone 518-587-3550 ** Fax 518-587-2417
www.saratoga-springs.org

ANTHONY J. SCIROCCO
COMMISSIONER

TIMOTHY J. COGAN
DEPUTY COMMISSIONER

received 6/21/16

NEW WATER SERVICE CONNECTION
AGREEMENT & APPLICATION FORM

Property Owner's Name: David Guarino Project Name (if applicable): _____

Property Address: 21 Park Place Tax Map#: _____

Size of Tap (check one below):

☐ ¾" ☒ 1"

☐ **Greater than 1"**
A unit of water shall be defined as fourteen thousand (14,000) cubic feet of water per year.

Contact the Water Dept at ext. 2502 for assistance with water use estimation and meter specifications before signing below.

Number of Dwellings: 2 Units - one lot - Subject to change Estimated Cubic Feet of Water per Year: _____

To be completed in full without any contingencies or protest, on or before the Building Inspector approval of the rough plumbing, including the installation of the water meter, or at the time of the issuance of a tapping permit.

The undersigned represents to the City that they have full and complete authority to execute this document and find and commit the developer to abide by the City Water Ordinance. This agreement shall be binding on all of the undersigned transferees.

The undersigned acknowledges that a copy of this document will be delivered to all appropriate and necessary governmental entities.

Authorized Signature: David Guarino Company Name: _____

Company Address: _____

Phone Number: [redacted] Fax Number: — Date: 6-21-16

Department of Public Works Approval: [signature] Date: 6/24/16

Sitework Cost Estimate / Financial Guarantee Amount

Project No.: RE-748-B **City Project Number:** PB# XX.XXX
Project: 21 Park Place Subdivision **Date:** 9/6/2016
Location: 21 Park Place **Rev:** 0
Estimater: Frank T. Owens, Rexford Engineering PLLC

No.	*Item*		*Quantity*	*Unit*	*Unit Cost*	*Sub Total*	*ROW/Site*
A	**Demolition and Site Clearing**						
	Tree Removal		2	EA	$975.8	$1,952	Site
	Remove Asphalt Driveway		319	SY	$1.0	$319	Site
	Remove Aprons		8	SY	$1.0	$8	ROW
	Remove Sidewalk		250	SF	$2.2	$538	ROW
	Remove Curb Park Place		160	LF	$7.4	$1,190	ROW
B	**Excavation and Grading**						
	Strip Top Soil and Stockpile		136	CY	$4.0	$545	Site
	Stabilized Construction Entrances		127	SY	$11.0	$1,393	Site
	Install Silt Fencing		482	LF	$3.6	$1,721	Site
	Install Tree Protection Fencing		281	LF	$1.0	$281	Site
	Excavate for Driveway		206	CY	$3.7	$769	Site
	Spread Topsoil		50	CY	$15.8	$788	Site
C	**Utilites**						
	Saw Cut Pavement		31	SY	$3.6	$111	ROW
	Sanitary Line Install (6" SDR-35)		25	LF	$20.0	$500	Site
	Sanitary Line Install (6" SDR-35)		20	LF	$23.8	$476	ROW
	Water Line Install (1" Copper Service)		25	LF	$22.0	$550	Site
	Water Line Install (1" Copper Service)		20	LF	$26.2	$524	ROW
	Sanitary Cleanout		1	EA	$650.0	$650	Site
D	**Improvements**						
	Repaire 50' of 5' Brick Sidewalk		250	SF	$9.5	$2,380	ROW
	New Concrete Curbing		160	LF	$19.0	$3,046	ROW
	Sternberg LED D650		2	EA	$2,500.0	$5,000	ROW
	Pedestrian Ramps		45	SF	$6.0	$268	ROW
	Asphalt Aprons		7	SY	$27.4	$182	ROW
	Asphalt Driveways		309	SY	$27.4	$8,454	Site
E	**Landscaping**						
	Fine Grade & Seed		160	SY	$1.4	$228	Site
G	**As Built Drawing**		1	EA	$2,200.0	$2,200	ROW
	Total On Site	$ 18,150.85	25%			**$4,537.7**	
	Total Off Site (ROW)	$ 15,923.54	100%			**$15,923.5**	
	Proposed Letter of Credit (LOC) Amount					**$20,461.25**	

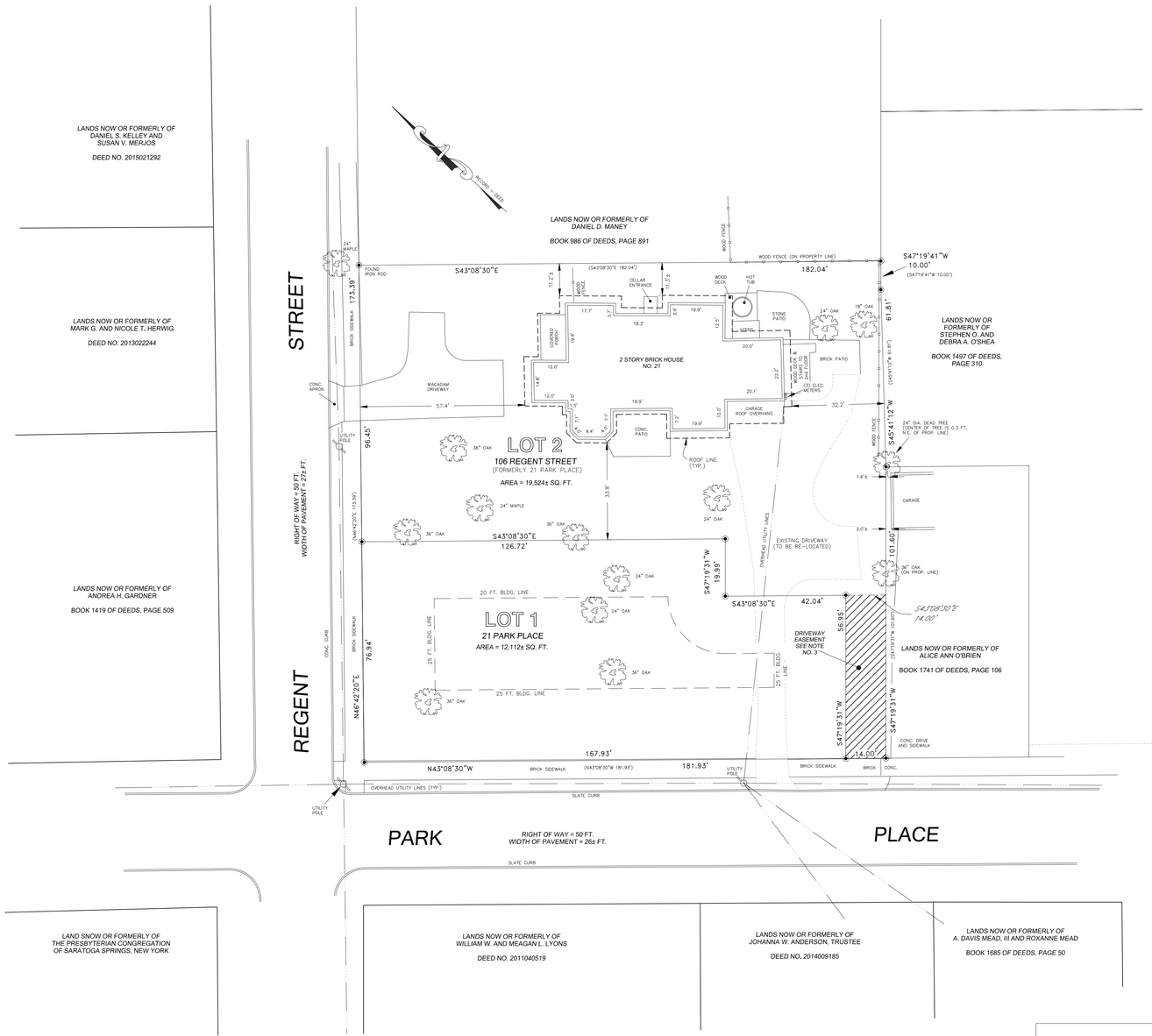

ZONING INFORMATION:

ZONING DISTRICT: UR–4
- MINIMUM LOT SIZE: 3,000 SF/D.U.
- MINIMUM MEAN LOT WIDTH: 100 FT.
- MAXIMUM PERCENT OF LOT TO BE OCCUPIED BY:
  - PRINCIPAL BUILDING: 25 %
  - ACCESSORY BUILDING: 15%
- MINIMUM YARD DIMENSIONS:
  - FRONT: 25 FT.
  - REAR: 25 FT.
  - ONE SIDE: 20 FT.
  - TOTAL SIDE: 45 FT.
- PRINCIPAL BUILDING:
  - MINIMUM FIRST FLOOR AREA:
    - 1 STORY: 1,800 SQ. FT.
    - 2 STORY: 1,200 SQ. FT.
  - MAXIMUM BUILDING HEIGHT: 70 FT.
  - MINIMUM DISTANCE FROM ACCESSORY BUILDING TO:
    - PRINCIPAL BUILDING: 10 FT.
    - FRONT LOT LINE: 25 FT.
    - SIDE LOT LINE: 5 FT.
    - REAR LOT LINE: 5 FT.
- MINIMUM PERCENT OF LOT TO BE PERMEABLE: 15%

TAX MAP NO.

CURRENT PROJECT TAX MAP PARCEL NO.: 165.84–1–1

AREA

TOTAL AREA OF SUBDIVISION IS 31,636± SQ. FT.

NOTES:

1.) THIS SURVEY WAS DONE WITHOUT THE BENEFIT OF AN ABSTRACT OF TITLE OR A TITLE REPORT.

2.) BEARINGS AND DISTANCES IN PARENTHESIS ARE PER BOOK 1504 OF DEEDS AT PAGE 69.

3.) THE CROSS–HATCHED AREA REPRESENTS AN EASEMENT FOR A SHARED DRIVEWAY .

DEED REFERENCE:

1.) DEED DATED NOVEMBER 9, 1998 FROM THOMAS PERSONS, AS QUALIFIED INTERMEDIARY FOR JOHN TORANI, TO DAVID P. GUARINO AND LINDA E. HANER AND RECORDED IN THE SARATOGA COUNTY CLERK'S OFFICE IN BOOK 1504 OF DEEDS AT PAGE 69.

CITY OF SARATOGA SPRINGS - STANDARD NOTES:

1.) ALL WORK MUST CONFORM TO ALL FEDERAL, STATE AND CITY CODES, SPECIFICATIONS, ORDINANCES, RULES AND REGULATIONS.

2.) ELEVATIONS ESTABLISHED FROM INFORMATION SUPPLIED BY THE CITY OF SARATOGA SPRINGS ENGINEER'S OFFICE.

3.) ALL REFUSE, DEBRIS AND MISCELLANEOUS ITEMS TO BE REMOVED SHALL BE LEGALLY DISPOSED OF OFF–SITE BY THE CONTRACTOR TO A LOCATION APPROVED BY THE CITY ENGINEER.

4.) THE CONTRACTOR MUST SET UP A PRE–CONSTRUCTION MEETING WITH THE CITY ENGINEER PRIOR TO ANY CONSTRUCTION. CONSTRUCTION INSPECTIONS BY A DESIGNATED REPRESENTATIVE OF THE APPLICANT/DEVELOPER ARE REQUIRED. THE COST OF THE CONSTRUCTION INSPECTION IS THE RESPONSIBILITY OF THE APPLICANT/DEVELOPER. AN ESCROW ACCOUNT TO COVER THE COST OF THE INSPECTIONS MUST BE ESTABLISHED PRIOR TO ANY CONSTRUCTION.

5.) THE CONTRACTOR MUST OBTAIN A BLASTING PERMIT FROM THE BUILDING INSPECTOR IF ANY BLASTING IS REQUIRED FOR THE PROJECT.

6.) THE CONTRACTOR MUST OBTAIN A STREET OPENING PERMIT ISSUED BY THE DEPARTMENT OF PUBLIC WORKS FOR ANY WORK IN THE STREET OR RIGHT OF WAY OF ANY CITY STREET, ROAD OR ALLEY.

7.) ALL POINTS OF CONSTRUCTION INGRESS AND EGRESS SHALL BE MAINTAINED TO PREVENT TRACKING OR FLOWING OF SEDIMENT OR DEBRIS ONTO A PUBLIC ROAD.

8.) NO CERTIFICATE OF OCCUPANCY WILL BE ISSUED UNTIL ALL SITE WORK HAS BEEN COMPLETED IN ACCORDANCE WITH THE APPROVED PLANS AND AN AS–BUILT DRAWING HAS BEEN PREPARED IN ACCORDANCE WITH THE REQUIREMENTS OF THE CITY ENGINEER.

CERTIFICATION:

THIS SURVEY WAS MADE IN ACCORDANCE WITH THE EXISTING CODE OF PRACTICE ADOPTED BY THE NEW YORK STATE ASSOCIATION OF PROFESSIONAL LAND SURVEYORS.

DANIEL C. WHEELER P.L.S. LIC. NO. 50,137

APPROVED UNDER AUTHORITY OF A RESOLUTION ADOPTED_____
BY THE PLANNING BOARD OF THE CITY OF SARATOGA SPRINGS.

_____CHAIRPERSON

DATE SIGNED_____

SURVEY ASSOCIATES, LLC
PROFESSIONAL LAND SURVEYING
DANIEL C. WHEELER, LS
432 BROADWAY, SUITE 5, SARATOGA SPRINGS, NY 12866
PH. (518) 583–7302 FAX (518) 583–7303

DANIEL C. WHEELER
P.L.S. LIC. NO. 50,137

UNAUTHORIZED ALTERATION OR ADDITION TO THIS MAP IS A VIOLATION OF ARTICLE 145, SECTION 7209, SUB–PARAGRAPH (2) OF THE NEW YORK STATE EDUCATION LAW.

PROJECT OWNER/DEVELOPER
DAVID P. GUARINO AND LINDA E. HAYNER
21 PARK PLACE
SARATOGA SPRINGS, NEW YORK 12866
PHONE: 518–477–3485

PLANNING BOARD PROJECT NO. 16.XXX

TITLE:

SUBDIVISION PLAN

21 PARK PLACE SUBDIVISION

LOCATION:
CITY OF SARATOGA SPRINGS
(INSIDE DISTRICT)
SARATOGA COUNTY, NEW YORK

DATE:
AUGUST 10, 2016

SCALE:
1 INCH = 20 FEET

MAP NO. 2016–07–04

WATER, SANITARY & SEDIMENT CONTROL

ENGINEERING REPORT

21 PARK PLACE SUB-DIVISION

File No. 2016-1

21 PARK PLACE

SARATOGA SPRINGS, NEW YORK 12866

Applicant: David P. Guarino & Linda E. Haner

Prepared by:

REXFORD ENGINEERING PLLC
ENGINEERING CONSULTANTS
23 FAIRWAY LANE •
REXFORD, NY 12148 •
PHONE: (518) 399-0153 •
FAX: (253) 484-9242 •
EMAIL: RE4OJK@GMAIL.COM •

September 21, 2016

Introduction:
Rexford Engineering PLLC has been retained by the applicants David P. Guarino and Linda E. Haner of 21 Park Place, Saratoga Springs, New York to provide land planning and site/civil engineering services in connection with the subdivision application for 21 Park Place, Saratoga Springs, New York 12866, tax map number 166.84-1.1. Subdivision approval will be required from the Planning Board which includes all requirements listed on the City of Saratoga's Preliminary/Final Subdivision Approval Required Submittal Checklist. This report fulfils Item 6 under the Required Items part of that checklist and accompanies Rexford Engineering PLLC drawings V1, S1, S2 and S3. V1 is the vicinity plan, S1 is the subdivision plat, S2 is the sediment and erosion control plan and S3 contains site plan details.

Description of Intended Site Development & Use:
21 Park Place is located on the corner of Park Place and Regent Street in Saratoga Springs New York. The 31,363 square foot (0.72 acre) lot has an existing building approximately 5390 square foot in living area containing three dwelling units. There is one 3 bedroom dwelling on the first floor and two 2 bedroom dwellings on the second floor. The building is accessed by two separate driveways, one from Park Place and one from Regent Street. The lot area is nearly level with a maximum elevation difference of 2-3'. The grounds are grassy with ten to eleven fully mature 24 to 36" oak trees.

The proposed subdivision of this parcel would result in dividing the single lot into two lots. The existing lot address would change from 21 Park Place to 106 Regent Street. This lot would retain the two driveways currently used for the property (one on Regent and one on Park Place). The Park Place driveway will be a shared driveway by way of an easement. The existing Park Place driveway for the proposed 106 Regent Street lot will be slightly modified to widen it to 10 feet and move the driveway closer to the eastern property line. This will maximize the new lots boundary and parking for the existing lot. The resulting 106 Regent Street lot would be 19,524 square feet (0.448 acres) in total and 54% impermeable post construction.

A second lot on the existing parcel would be created and marketed for sale. This lot is assumed to accommodate a single two family home (2 dwelling units) and a detached 2 car garage. The new lot would have an address of 21 Park Place and be 12,112 square feet (0.278 acres) in area. The 21 Park Place address would be accessible via shared driveway from Park Place. The new lot will be 34% impermeable.

Compliance with the requirements of Table 3 of the City of Saratoga Springs Zoning Ordinance is as shown on the subdivision plat, S1.

Municipal water and sewer exists along both Regent Street as well as Park Place. The new lot, being within the boundary of the current property lines of 21 Park Place would also be served by these municipal services. Natural gas and electric utilities are also available along both streets.

Water Report:
Municipal water service is currently provided by the City of Saratoga Springs. A 4" diameter water main runs along both Regent Street and Park Place. The existing residence is connected to the water main from the Regent Street side. The new lot will require a 1" diameter water service line which will tap into the 4" water main on Park Place approximately as shown on S1.

On July 14, 2015 at 10:30 a.m. North East Fire Protection Systems Incorporated performed a hydrant flow test per NFPA 291. The hydrant flow test indicated static pressures in the area of Park Place and Regent Street of 71 pounds per square inch (psi). During the flow test, the hydrant flow, running at approximately 435 gallons per minute (GPM), caused the residual pressure at the test hydrant to drop to 46 psi giving a theoretical available flow of approximately 639 GPM at 20 psi. Refer to Attachment A for the Hydrant Flow Test Report provided by Northeast Fire Protection Systems, Inc. This flow is adequate for Class B and C hydrants.

Currently, there are 7 bedrooms within the 3 dwelling units on the property. Using a standard use rate of 110 gallons per capita day[Note1] (gpcd) the existing property can be estimated to have a total use of 770 gpd. This equates to an annual water consumption usage of 281,000 gallons.

The new lot will accommodate a two family home with conceivably 3 bedrooms per dwelling unit. In this assumption an additional 660 gpd can be expected. The total annual water consumption would increase by 241,000 gallons to 522,000 gallons (1,430 gallons per day).

The average daily demand for water to both lots is approximately 1 gpm over a 24 hour period. The maximum daily demand is 2 gpm based on twice the average. The peak hourly flow is approximately 4.2 gpm based on 4.2 times the average. Instantaneous peak demand is estimated at 40 gpm[Note4].

Connections and appurtenances, including mechanical joints, tees, isolation valves, thrust blocks, trenching, bedding, service connections, as well as testing and disinfection will all be specified in accordance with City of Saratoga Springs standards.

Sanitary Report:
Municipal sewer is provided along both Park Place and Regent Street. There is an 8" sanitary sewer main located on Regent Street and a 10" main located on Park Place. An existing service line connects the existing building to the sanitary sewer main on the Regent Street side. The new lot would support a two family dwelling. A two dwelling unit building would be expected to use a 4" to 6" diameter PVC service line connecting to the 10" Park Place sanitary main.

There are 7 bedrooms within the 3 dwelling units currently on the property. Using a standard sanitary sewer of 110 gallons per capita day (gpcd)[Note1] the existing property can be estimated to have an annual sanitary flow of 281,000 gallons.

The new lot will accommodate a two family home with conceivably 3 bedrooms per dwelling unit. In this assumption an additional 660 gpd can be expected. The total wastewater flow rate would increase by 241,000 gallons to 522,000 gallons (1,430 gallons per day).

The average daily flow for wastewater to the Park Place and Regent sanitary mains for both both lots is approximately 1 gpm over a 24 hour period. The estimated peak hourly flow is approximately 4.2 gpm based on 4.2 times the average.

Pipe, trenching, bedding, service connections, and testing will all be specified in accordance with City of Saratoga Springs minimum standards.

Soil Conditions:
The site soil type is Windsor loamy sand (WnA), nearly level, hydrologic soil group A. The depth to any restrictive feature is greater than 80 inches. The soil is classified as excessively drained with percolation tests resulting in infiltration rates in excess of 5 in/hr, confirmed by Falling Head testing conducted by Daniel G. Loucks P.E. Geotechnical Engineering in December of 2014.

Storm sewer catch basins exist at the intersection of Park Place and Regent Street and connect into a 12" storm sewer main. Due to the small scale of residential construction and highly draining soil the project is not expected to create significant additional stormwater flows. The addition of landscaping and small rain garden type features near downspouts will be very effective.

Sediment & Erosion Control:
A sediment and erosion control plan has been developed in order to specify minimum controls and measures to reduce sediment runoff during construction. A construction entrance has been specified to accommodate the construction of both the new lot and the expanded driveway construction of the existing lot if they happen simultaneously. A potential topsoil storage area for foundation backfill and topsoil has been identified on S2 and will be surrounded by silt fencing. In general, excavated soil for foundations that will not be retained for backfill and topsoil grading will be shipped off site daily. Concrete trucks are not allowed to wash on the premises. Sediment fencing has been specified on three sides of the project area to reduce off site erosion migration. A total of 0.12 acre will be temporarily disturbed during this residential construction.

Frank T. Owens P.E.
Rexford Engineering PLLC

Notes

1. *From Table 1, Appendix 75-A Wastewater Treatment Standards - Residential Onsite Systems (110 gallons per day per bedroom)*
2. *From Figure 1, GLUMRB Recommended Standards for Wastewater Facilities $Q = (18 + P^{1/2}) \div (4 + P^{1/2})$ where P = population in thousands*
3. *From Tables XIV Community Water Systems Source Book, Ameen (4.3 gpm/residence)*
4. *From Tables XIV Community Water Systems Source Book, Ameen (8.0 gpm/residence)*

ATTACHMENT 1

North East Fire Protection Systems Inc.

P.O. BOX 508 BURNT HILLS, N.Y. 12027 (518) 885-1115 FAX (518) 885-0526

EMAIL: JIMFC NEFPSI.COM

HYDRANT FLOW TEST REPORT

LOCATION: SOUTH EAST ST @ PARK PLACE

TEST HYDRANT COTTAGE @ PARK PLACE

TEST BY: JIM FANTAUZZI / CARY STEW.

DATE: 7-14-15 **TIME:** 10:30 AM

TARGET HYD. LOCATION (B) CORNER OF SOUTH EAST @ PARK PLACE

TEST RESULTS : **STATIC PRESSURE (B)** _____ **PSI**

RESIDUAL PRESSURE (B) (13q) 24 **PSI WITH** _____ **(A) GPM FLOWING**

RESIDUAL PRESSURE (B) (2 1/2) 8 **PSI WITH** _____ **(A) GPM FLOWING**

FLOW HYD. LOCATION (A) SOUTH EAST @ PARK PLACE

448) .97 **1) PORT FLOWED (A)** 1 3/4 **DIAMETER** _____

527 x .90 **2) PORT FLOWED (A)** 2 1/2 **DIAMETER** _____

3) PORT FLOWED (A) _____ **DIAMETER** _____

1) PITOT or FLOW METER READING (A) 71 **PSI AT** 0 **GPM**

2) PITOT or FLOW METER READING (A) 46 **PSI AT** 435 **GPM**

3) PITOT or FLOW METER READING (A) 35 **PSI AT** 474 **GPM**

OUTLET COEFFICIENT USED .97 / .90

(smooth 0.90) (square & sharp 0.88) (projecting into barrel 0.77)

$$Q_{20} = Q\left(\frac{P_S - P_{20}}{P_S - P}\right) = 435\left(\frac{71-20}{71-46}\right)^{.54} = 639$$

ESTIMATED FLOW AT 20 PSI 639 **GPM**

LOCATION SKETCH ATTACHED ? YES X **NO** _____

YARD SETBACK (MIN)
NG NAT GAS LINE
ST STORM SEWER
E UNDERGROUND ELECTRIC
W WATER LINE
SS SANITARY SEWER
6' WOOD FENCE – SHADOW
STORM SEWER MANHOLE
SANITARY SEWER MANHOLE
UTILITY POLE
FIRE HYDRANT
WV WATER VALVE
STORM SEWER CATCH BASIN
EXISTING STREET LIGHT
RESIDENTIAL LIGHTING
NEW STERNBERG STREET LIGHT
REPAIRED BRICK SIDEWALK
NEW ASPHALT DRIVEWAY
NEW BRICK WALKWAY
LANDSCAPING – HEDGES
TREE REMOVAL
NEW TREE
2 PARKING SPACE

SITE IMPROVEMENTS:
6 EASTERN REDBUDS OR EQUIVALENT
APPROXIMATELY 50 FT OF REPAIRED BRICK SIDEWALK
2 STERNBERG LAMPOSTS
160' CONCRETE CURB ALONG PARK PLACE

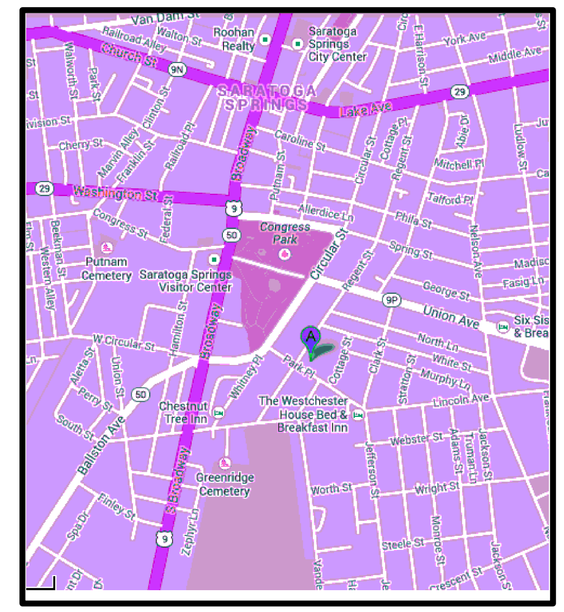

SITE LOCATION MAP
(NO SCALE)

PROJECT DATA:
PROJECT TITLE: 21 PARK PLACE (PP) SUBDIVISION
PROJECT LOCATION: 21 PARK PLACE, SARATOGA SPRINGS, NEW YORK
PROJECT OWNER: LINDA E. HANER & DAVID P. GUARINO
21 PARK PLACE, SARATOGA SPRINGS, NE W YORK 12866
TAX MAP NO. 165.84-1.1

EXISTING 21 PARK PLACE:
1. ZONING DISTRICT: UR-4
2. ZONING LOT SIZE: 31,636 SF (0.726 ac)
3. NUMBER OF DWELLING UNITS: 3
4. LOT SIZE/DWELLING UNIT: 10,545.33 SF (3,000 SF MIN)
5. MINIMUM AVERAGE LOT WIDTH: 182 FT (100 FT MIN)
6. 21 PP 1ST FL AREA: 2,475 SF (1,200 SF MIN)
7. 21 PP 2ND FL AREA: 2,915 SF
8. 21 PP FOOTPRINT: 3,775 SF (0.087 ac)
9. PRINCIPAL BUILDING COVERING %: 12% (25% MAX)
10. ACCESS BUILDING COVERING %: 0% (15% MAX)
11. FRONT YARD SETBACK: 106 FT (25 FT MIN)
12. REAR YARD SETBACK: 11 FT (25 FT MIN)*
13. EACH SIDE YARD SETBACK: 34 FT (20 FT MIN)
14. TOTAL SIDE YARD SETBACK: 93 FT (45 FT MIN)
15. 21 PP HEIGHT: 35 FT (70 FT MAX)
16. DIST TO ACCESS BUILDING - PRINCIPAL BUILDING: N/A (10 FT MIN)
17. DIST TO ACCESS BUILDING - FRONT LOT LINE: N/A (25 FT MIN)
18. DIST TO ACCESS BUILDING - SIDE LOT LINE: N/A (5 FT MIN)
19. DIST TO ACCESS BUILDING - REAR LOT LINE: N/A (5 FT MIN)
20. TOTAL PERMEABLE AREA: 70% (15% MIN)
21. TOTAL IMPERVIOUS COVER: 9,439 SF (0.217 ac)
22. TOTAL IMPERVIOUS COVER PERCENTAGE: 30 % (85% MAX)

PROPOSED 106 REGENT:
1. ZONING DISTRICT: UR-4
2. LOT SIZE: 19,524 SF (0.448 ac)
3. # OF DWELLING UNITS: 3 (EXISTING & PRE-APPROVED - 3/3/1987)
4. LOT SIZE/DWELLING UNIT: 6,508 SF (3,000 SF MIN)
5. MIN AVERAGE LOT WIDTH: 120 FT (100 FT MIN)
6. EXISTING 106 REGENT 1ST FL AREA: 2,475 SF (1200 SF MIN)
7. EXISTING 106 REGENT 2ND FL AREA: 2,915 SF
8. EXISTING 106 REGENT FOOTPRINT: 3,775 SF (0.087 ac)
9. PRINCIPAL BUILDING COVERING %: 19% (25% MAX)
10. ACCESSORY BUILDING COVERING %: N/A (15% MAX)
11. FRONT YARD SETBACK: 59 FT (25 FT MIN)
12. REAR YARD SETBACK: 33.5 FT (25 FT MIN)
13. EACH SIDE YARD SETBACK: 11.3 FT EAST / 33.8 FT WEST (20 FT MIN)
14. TOTAL SIDE YARD SETBACK: 45 FT (45 FT MIN)
15. HEIGHT: 35 FT (70 FT MAX)
16. PRINCIPAL TO ACCESSORY BUILDING DISTANCE: N/A (10 FT MIN)
17. FRONT LOT LINE TO ACCESSORY BUILDING DISTANCE: N/A (25 FT MIN)
18. SIDE LOT LINE TO ACCESSORY BUILDING DISTANCE: N/A (5 FT MIN)
19. REAR LOT LINE TO ACCESSORY BUILDING DISTANCE: N/A (5 FT MIN)
20. TOTAL PERMEABLE AREA: 46% (15% MIN)
21. TOTAL IMPERVIOUS COVER: 54% (85% MAX)

PROPOSED 21 PARK PLACE:
1. ZONING DISTRICT: UR-4
2. LOT SIZE: 12,112 SF (0.278 ac)
3. DWELLING UNITS: TBD (1-2 FAMILY ALLOWABLE)
4. LOT SIZE PER DWELLING UNIT: 6,056 SF (3,000 SF MIN)
5. MIN AVERAGE LOT WIDTH: 153.8 SF (100 SF MIN)
6. FIRST FLOOR AREA: 1,938 SF (0.045 ac) (1,200 SF MIN)
7. SECOND FLOOR AREA: 1,938 SF (0.045 ac)
8. ACCESSORY (GARAGE) FOOTPRINT: 741 SF (0.017 ac)
9. ACCESSORY (GARAGE) FLOOR AREA: 637 SF (0.015 ac)
10. BUILDING FOOTPRINT: 2,155 SF (0.049 ac)
11. PRINCIPAL BUILDING COVERAGE: 18 % (25% MAX)
12. ACCESSORY BUILDING COVERAGE: 5% (15% MAX)
13. FRONT YARD SETBACK REGENT & PARK PLACE: 25 FT (25 FT MIN)
14. REAR YARD SETBACK: 25 FT (25 FT MIN)
15. SIDE YARD SETBACK: 20 FT (20 FT MIN)
16. EACH SIDE YARD SETBACK: 20 FT NORTH / 25 FT EAST (20 FT MIN)
17. TOTAL SIDE YARD SETBACK: 45 FT (45 FT MIN)
18. BUILDING HEIGHT: TBD (70 FT MAX)
19. PRINCIPAL TO ACCESSORY BUILDING DISTANCE: 20 FT (10 FT MIN)
20. FRONT LOT LINE TO ACCESSORY BUILDING DISTANCE: 25 FT (25 FT MIN)
21. SIDE LOT LINE TO ACCESSORY BUILDING DISTANCE: 5 FT (5 FT MIN)
22. REAR LOT LINE TO ACCESSORY BUILDING DISTANCE: N/A (5 FT MIN)
23. TOTAL PERMEABLE AREA: 66% (15% MIN)
24. TOTAL IMPERVIOUS COVER: 34% (85% MIN)

TOTAL PROJECT DISTURBANCE: 5,239 SF (0.12 ac)

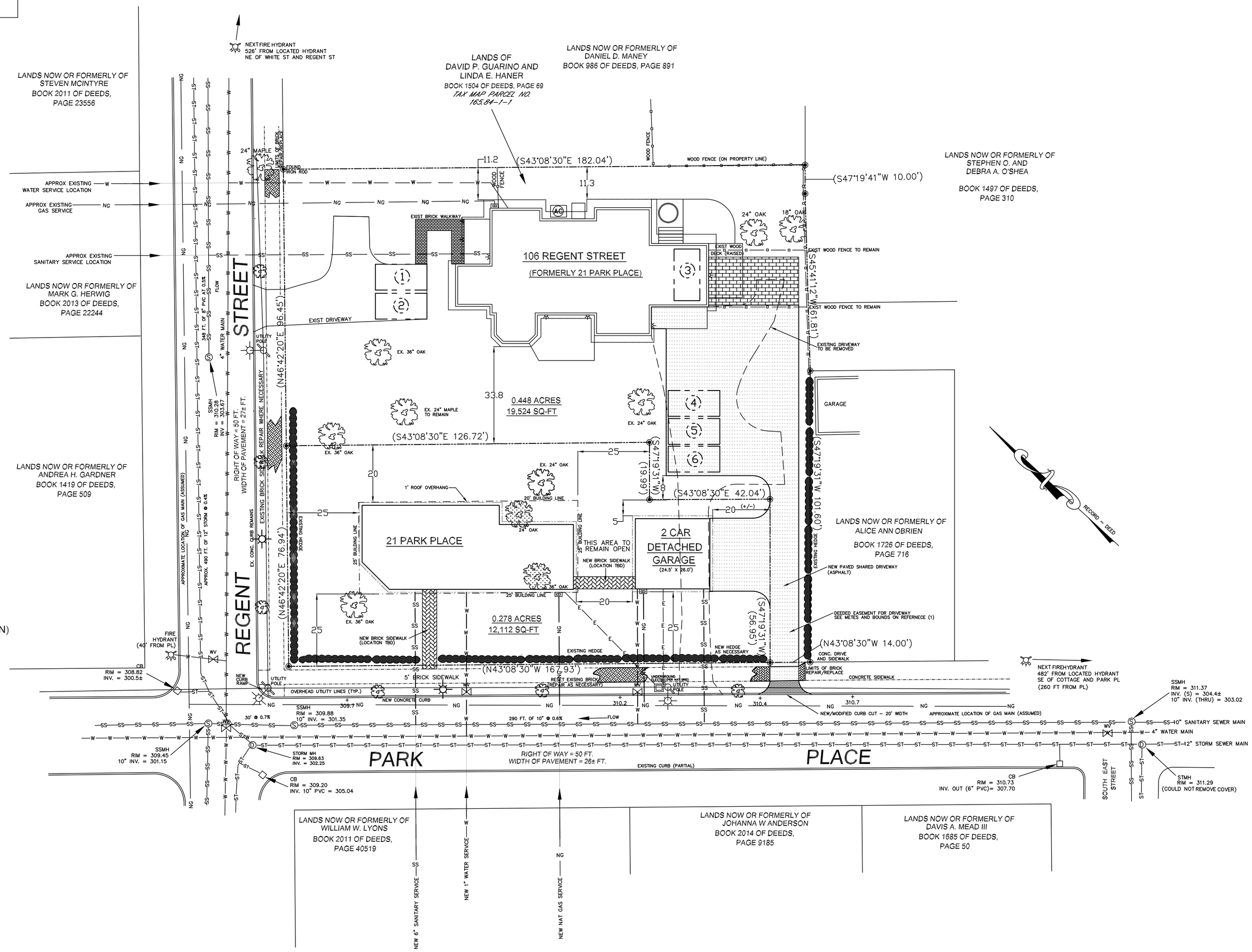

MAP REFERENCES:
1. "SUBDIVISION PLAN, 21 PARK PLACE SUBDIVISION", MAP NO. 2016-07-04, REVISION –, 08/10/2016, BY SURVEY ASSOCIATES, LLC. DANIEL C. WHEELER L.S.

2. SITE PLAN FOR TORANI RESIDENCE, 21 PARK PLACE, SARATOGA SPRINGS, NEW YORK ZONING: R-4. EXISTING CONDITIONS AND PROPOSED OFF-STREET PARKING. DATED JAN 20 1987. WAYNE G. PETERSON, ARCHITECT. APPROVED 3/3/1987.

PB# XX.XXX

REV.	DATE	BY	CHK.	DESCRIPTION
0	9/21/2016	FTO	JK	ORIGINAL SUBMITTAL

BOUNDARY INFORMATION
BOUNDARY INFORMATION USED IN THE PREPARATION OF THIS PLAT WAS TAKEN FROM THE MAPS REFERENCED ON THIS PLAT.

PER NYS EDUCATION LAW, REXFORD ENGINEERING PLLC AND ITS MEMBERS DO NOT PARTICIPATE IN THE PRACTICE OF LAND SURVEYING NOR ASSUME THE DUTIES GRANTED LICENSED LAND SURVEYORS IN ESTABLISHING REAL PROPERTY BOUNDARIES.

UNAUTHORIZED ALTERATION OR ADDITION TO THIS DRAWING IS A VIOLATION OF SECTION 7209 SUBDIVISION 2, OF THE NEW YORK STATE EDUCATION LAW. ONLY COPIES MADE FROM THE ORIGINAL OF THIS DRAWING BEARING AN ORIGINAL INKED OR EMBOSSED SEAL AND SIGNATURE SHALL BE CONSIDERED TO BE VALID TRUE COPIES.

REXFORD ENGINEERING PLLC
ENGINEERING CONSULTANTS
23 FAIRWAY LANE -
REXFORD, NY 12148 -
PHONE: (518) 399-0153 -
FAX: (253) 484-9242 -
EMAIL: REJOJK@GMAIL.COM -
JOHN ELDDING, P.E. LICENSE NO. NY 057080

DRAWN BY: FTO | CITY OF: SARATOGA SPRINGS | SCALE: 1" = 20'
CHECKED BY: JK | COUNTY OF: SARATOGA | DATE: 9/21/16
TAX MAP NO. 165.84-1-1 | STATE OF: NEW YORK | REVISION: 0

21 PARK PLACE SUBDIVISION
OWNER: DAVID P. GUARINO & LINDA E. HANER

PROPOSED SUBDIVISION PLAT

S1
SHEET 1

STABILIZED CONSTRUCTION ENTRANCE

TREE REMOVAL

TEMPORARY TOPSOIL STOCKPILE AREA

LIMITS OF NEW DISTURBANCE

SF — SILT FENCE

HVC — HIGH VISIBILITY FENCE

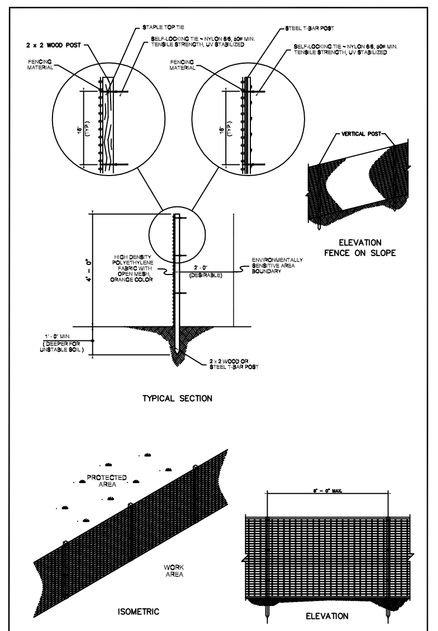

HIGH VISIBILITY CONSTRUCTION FENCE

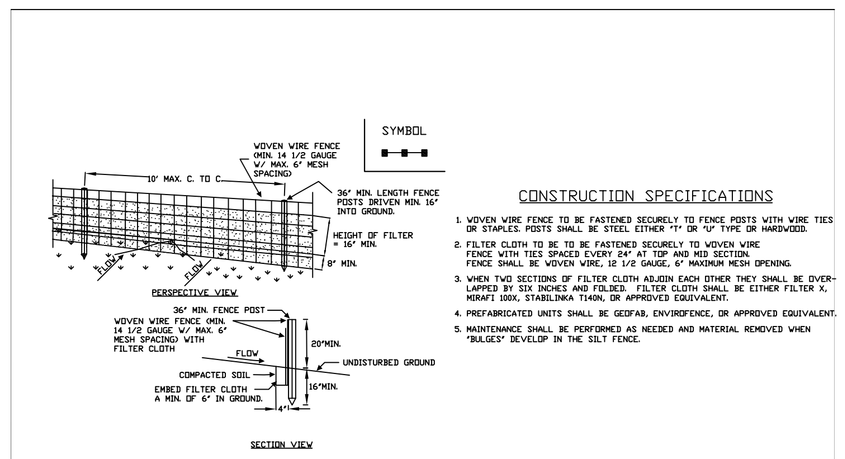

CONSTRUCTION SPECIFICATIONS

1. WOVEN WIRE FENCE TO BE FASTENED SECURELY TO FENCE POSTS WITH WIRE TIES OR STAPLES. POSTS SHALL BE STEEL EITHER T'Y' OR 'U' TYPE OR HARDWOOD.
2. FILTER CLOTH TO BE TO BE FASTENED SECURELY TO WOVEN WIRE FENCE WITH TIES SPACED EVERY 24" AT TOP AND MID SECTION. FENCE SHALL BE WOVEN WIRE, 12 1/2 GAUGE, 6" MAXIMUM MESH OPENING.
3. WHEN TWO SECTIONS OF FILTER CLOTH ADJOIN EACH OTHER THEY SHALL BE OVERLAPPED BY SIX INCHES AND FOLDED. FILTER CLOTH SHALL BE EITHER FILTER X, MIRAFI 100X, STABILINKA T140N, OR APPROVED EQUIVALENT.
4. PREFABRICATED UNITS SHALL BE GEOFAB, ENVIROFENCE, OR APPROVED EQUIVALENT.
5. MAINTENANCE SHALL BE PERFORMED AS NEEDED AND MATERIAL REMOVED WHEN "BULGES" DEVELOP IN THE SILT FENCE.

SILT FENCE N.T.S.

BASED ON NEW YORK GUIDELINES FOR URBAN EROSION & SEDIMENT CONTROL.

APPROVED: PLANNING BOARD	1/13/2010 DATE	CITY OF SARATOGA SPRINGS, NEW YORK	DWG No
		STANDARD DETAIL Silt Fence	ST-13

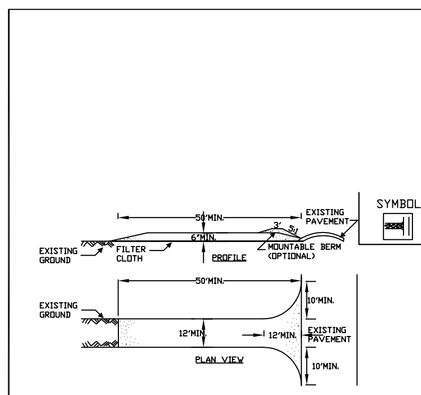

CONSTRUCTION SPECIFICATIONS

1. STONE SIZE - USE 2" STONE, OR RECLAIMED OR RECYCLED CONCRETE EQUIVALENT.
2. LENGTH - NOT LESS THAN 50 FEET (EXCEPT ON A SINGLE RESIDENCE LOT WHERE A 30 FOOT MINIMUM LENGTH WOULD APPLY).
3. THICKNESS - NOT LESS THAN SIX (6) INCHES.
4. WIDTH - TWELVE (12) FOOT MINIMUM, BUT NOT LESS THAN THE FULL WIDTH AT POINTS WHERE INGRESS OR EGRESS OCCURS. TWENTY-FOUR (24) FOOT IF SINGLE ENTRANCE TO SITE.
5. FILTER CLOTH - WILL BE PLACED OVER THE ENTIRE AREA PRIOR TO PLACING OF STONE.
6. SURFACE WATER - ALL SURFACE WATER FLOWING OR DIVERTED TOWARD CONSTRUCTION ENTRANCES SHALL BE PIPED ACROSS THE ENTRANCE. IF PIPING IS IMPRACTICAL, A MOUNTABLE BERM WITH 5:1 SLOPES WILL BE PERMITTED.
7. MAINTENANCE - THE ENTRANCE SHALL BE MAINTAINED IN A CONDITION WHICH WILL PREVENT TRACKING OR FLOWING OF SEDIMENT ONTO PUBLIC RIGHTS-OF-WAY. ALL SEDIMENT SPILLED, DROPPED OR TRACKED ONTO PUBLIC RIGHTS-OF-WAY MUST BE REMOVED IMMEDIATELY.
8. WHEN WASHING IS REQUIRED, IT SHALL BE DONE ON A AREA STABILIZED WITH STONE AND WHICH DRAINS INTO AN APPROVED SEDIMENT TRAPPING DEVICE.
9. PERIODIC INSPECTION AND NEEDED MAINTENANCE SHALL BE PROVIDED AFTER EACH RAIN.

STABILIZED CONSTRUCTION ENTRANCE NTS

BASED ON NEW YORK GUIDELINES FOR URBAN EROSION & SEDIMENT CONTROL.

APPROVED: PLANNING BOARD	1/13/2010 DATE	CITY OF SARATOGA SPRINGS, NEW YORK	DWG No
		STANDARD DETAIL Stabilized Construction Entrance	ST-11

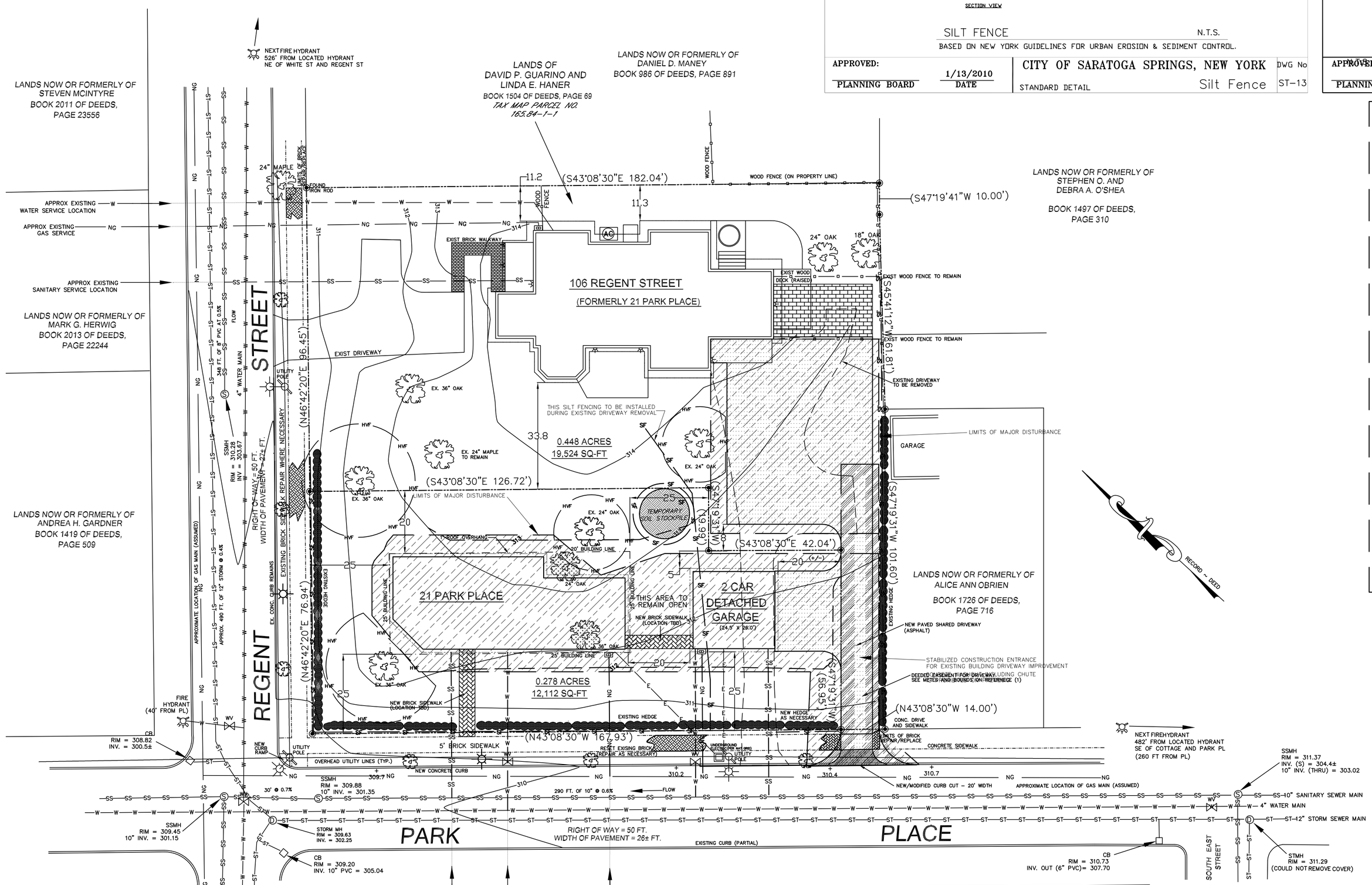

TREE PROTECTION NOTES

1. TREES WILL BE PROFESSIONALLY PRUNED PRIOR TO CONSTRUCTION, FOLLOWING ALL CERTIFIED ARBORIST INSTRUCTIONS, AND BRANCHES THAT COULD BE DAMAGED WILL BE REMOVED.

2. HIGH VISIBILITY ORANGE PROTECTIVE FENCING ON FLANGED POSTS WILL BE INSTALLED PER DETAIL ABOVE TO FORM A TREE PROTECTION ZONE. FENCE SHALL BE MAINTAINED IN GOOD CONDITION THROUGHTOUT THE ENTIRITY OF THE PROJECT.

3. FENCING SHALL BE PLACED USING THE GENERALLY ACCEPTED "TRUNK DIAMETER METHOD" (FITE & SMILEY, 2008 "MANAGING TREES FOR CONSTRUCTION"). [MEASURE THE DIAMETER OF THE TREE 6' ABOVE THE GROUND AND MULTIPLY BY 6 TO DETERMINE THE RADIUS OF THE PROTECTIVE FENCING].

4. PLACE FENCING PER MINIMUM DIAMETER FOUND IN 3 ABOVE WHERE POSSIBLE AROUND TREES TO BE PROTECTED. WHERE CONSTRUCTION AREAS OR STRUCTURES COINCIDE WITH MINIMUM DIAMETER LOCATE FENCING AS CLOSE AS PRACTICAL TO MINIMUM DIAMETER.

5. NO VEHICLES WILL BE ALLOWED TO DRIVE IN THE TREE PROTECTION ZONE.

6. NO CHEMICALS OR MATERIALS WILL BE DUMPED IN THE TREE PROTECTION ZONE.

7. NO MATERIALS WILL BE STORED IN THE TREE PROTECTION ZONE.

8. TREATMENT OF EXPOSED ROOTS: ROOTS GREATER THAN 1-1/2" IN DIAMETER WILL BE CLEARLY CUT AND WRAPPED IN WET BURLAP. SOAKER HOSES MAY BE NEEDED TO KEEP THE BURLAP WET. BURLAP WILL BE REMOVED PRIOR TO BACKFILLING.

9. WORK WITHIN THE TREE PROTECTION ZONE WILL BE DONE MANUALLY.

10. FENCE MAY BE REMOVED OR ADJUSTED FOR DRIVEWAY, WALKWAY AND LANDSCAPING CONSTRUCTION ACTIVITIES.

PROJECT TITLE:
21 PARK PLACE SUBDIVISION

PROJECT LOCATION:
21 PARK PLACE
SARATOGA SPRINGS, NEW YORK

PROJECT OWNER:
LINDA E HANER & DAVID P GUARINO
21 PARK PLACE
SARATOGA SPRINGS, NEW YORK 12866

SEDIMENT & EROSION CONTROL:

PROPOSED:
LIMITS OF TEMP CONSTRUCTION DISTURBANCE APPROXIMATELY 10,750 SQ-FT
SILT FENCES: APPROXIMATELY 600 FT
HIGH VISIBILITY FENCE: APPROXIMATELY 250 FT
STABILIZED CONSTRUCTION ENTRANCES: APPROXIMATELY 75 FT

NOTES:
1. TOPSOIL AND FILL THAT IS TO REMAIN STOCKPILED ON SITE FOR PERIODS EXCEEDING 30 DAYS SHALL BE STABILIZED BY SEEDING. PRIOR TO THE SEEDING OPERATION, THE STOCKPILED MATERIAL SHALL BE GRADED AS NEEDED AND FEASIBLE TO PERMIT THE USE OF CONVENTIONAL EQUIPMENT FOR SEEDED PREPARATION, FERTILIZATION, SEEDING, MULCH APPLICATION AND ANCHORING.

2. ENSURE CALL BEFORE YOU DIG IS CONTACTED 72 HOURS PRIOR TO EXCAVATION. ENSURE THE AREA IS MARKED PRIOR TO ANY EXCAVATION. DIG SAFELY NEW YORK CAN BE REACHED AT 811, 1-800-962-7962 OR WWW.DIGSAFELYNY.COM.

3. WASHING CONCRETE FROM CONSTRUCTION VEHICLES, INCLUDING CONCRETE TRUCK CHUTES, ON SITE PREMESIS IS PROHIBITED.

4. HIGH VISIBILITY FENCES TO BE ERECTED AROUND PROTECTED TREES AT OR BEYOND THE DRIP WHERE POSSIBLE. FENCE TO REMAIN DURING MAJOR EXCAVATION OF BUILDING FOUNDATIONS. FENCE MAY BE REMOVED FOR DRIVEWAY, WALKWAY OR LANDSCAPING CONSTRUCTION. SEE DETAIL.

MAP REFERENCES:
1. "SUBDIVISION PLAN, 21 PARK PLACE SUBDIVISION", MAP NO. 2016-07-04, REVISION -, 08/10/2016, BY SURVEY ASSOCIATES, LLC. DANIEL C. WHEELER L.S.

2. SITE PLAN FOR TORANI RESIDENCE, 21 PARK PLACE, SARATOGA SPRINGS, NEW YORK ZONING: R-4. EXISTING CONDITIONS AND PROPOSED OFF-STREET PARKING. DATED JAN 20 1987. WAYNE G. PETERSON, ARCHITECT. APPROVED 3/3/1987.

REV.	DATE	BY	CHK.	DESCRIPTION
0	9/8/2016	FTO	JK	ORIGINAL SUBMITTAL

BOUNDARY INFORMATION

BOUNDARY INFORMATION USED IN THE PREPARATION OF THIS PLAT WAS TAKEN FROM THE MAPS REFERENCED ON THIS PLAT.

PER NYS EDUCATION LAW, REXFORD ENGINEERING PLLC AND ITS MEMBERS DO NOT PARTICIPATE IN THE PRACTICE OF LAND SURVEYING NOR ASSUME THE DUTIES GRANTED LICENSED LAND SURVEYORS IN ESTABLISHING REAL PROPERTY BOUNDARIES.

UNAUTHORIZED ALTERATION OR ADDITION TO THIS DRAWING IS A VIOLATION OF SECTION 7209 SUBDIVISION 2, OF THE NEW YORK STATE EDUCATION LAW. ONLY COPIES MADE FROM THE ORIGINAL OF THIS DRAWING BEARING AN ORIGINAL INKED OR EMBOSSED SEAL AND SIGNATURE SHALL BE CONSIDERED TO BE VALID TRUE COPIES.

REXFORD ENGINEERING PLLC
ENGINEERING CONSULTANTS
23 FAIRWAY LANE -
REXFORD, NY 12148 -
PHONE: (518) 399-0153 -
FAX: (253) 484-9242 -
EMAIL: READJR@GMAIL.COM -
JOHN READING, P.E. LICENSE NO. NY 087080

DRAWN BY: FTO	CITY OF: SARATOGA SPRINGS	SCALE: 1" = 20'	
CHECKED BY: JK	COUNTY OF: SARATOGA	DATE: 9/8/16	
TAX MAP NO. 165.84-1-1	STATE OF: NEW YORK	REVISION: 0	

21 PARK PLACE SUBDIVISION
OWNER: DAVID P. GUARINO & LINDA E. HANER

PROPOSED SEDIMENT & EROSION CONTROL PLAN

S2
SHEET 1

NOTES:

1. INSTALLATION OF DECORATIVE LIGHTS SHALL BE COORDINATED WITH THE CITY ELECTRICIAN AND DEPARTMENT OF PUBLIC WORKS.
2. THE OWNER/DEVELOPER IS RESPONSIBLE FOR ELECTRIFYING THE SYSTEM AND PAYING THE ELECTRIC BILLS UNTIL ACCEPTED AND TAKEN OVER BY THE CITY OF SARATOGA SPRINGS.
3. ELECTRIC SERVICE: SWEEPS AT CONCRETE BASES AND BETWEEN BASES USE 2" SCH. 80 PVC NON-METALLIC CONDUIT. FOR WIRE: URD 3-CONDUCTOR NO. 2, 120 VOLT, 100 AMP CABLE. IF CONNECTING TO NATIONAL GRID FROM A POLE, PROVIDE A SEPARATE HANDHOLE TO BE OWNED BY THE CITY FOR THE DISCONNECT AT BASE OF ELECTRIC POLE AT THE BEGINNING OF ELECTRIC SERVICE. WIRE AND CONDUIT FROM HANDHOLE TO POLE PER NATIONAL GRID STANDARDS. USE POLARIS CONNECTORS, CATALOG NUMBER IT-1/0, FOR CONNECTIONS IN HANDHOLE AND IN BASE OF LIGHTS. EACH LIGHT TO BE FUSED IN BASE OF LAMP POLE WITH 10 AMP FUSE WITH BUSSMANN HEB-AA IN-LINE FUSE HOLDER. IF CONNECTING MORE THAN THREE LIGHTS FROM SAME SOURCE OF POWER, PROVIDE 30 AMP IN-LINE FUSE WITH WATERTIGHT FUSE HOLDER OF PROPER SIZE FOR WIRE. SEPARATE HANDHOLE IS NOT REQUIRED IF CONNECTING TO A NATIONAL GRID HANDHOLE.

HISTORIC LIGHTING DISTRICT LED LUMINAIRE (TYPE B) AND POLE FOUNDATION

N.T.S.

APPROVED: PLANNING BOARD	4/10/13 DATE	CITY OF SARATOGA SPRINGS, NEW YORK STANDARD DETAIL Historic Street Light – LED	DWG No LT-3

PAVEMENT TYPE	TOP COURSE	BINDER COURSE	GRAVEL COURSE	ESAL LEVEL
PARKING LOT	1-1/2"	2"	8-10"	<0.3 MILLION
STANDARD ROADWAY	1-1/2"	3"	12"	<30 MILLION
HEAVILY TRAVELED/ TRUCK LOADING	2"	* 4"	12"	<30 MILLION

* SEE NOTE 2

NOTES:

1. PAVEMENT SECTIONS SPECIFIED ARE TYPICAL FOR STREET, DRIVEWAY AND PARKING LOT CONSTRUCTION WHERE TRAFFIC VOLUMES AND LOADINGS ARE NOT EXCESSIVE. BASED ON ANTICIPATED VOLUMES AND LOADS, THE CITY ENGINEER MAY REQUIRE STRUCTURAL PAVEMENT SECTION TO BE INCREASED TO CARRY DESIGN LOADING.
2. BINDER TO BE PLACED IN 2 - 2" LIFTS W/ TACK COAT BETWEEN.
3. THE CITY ENGINEER MAY REQUIRE COMPACTION TESTING AND/OR CORE SAMPLES TO VERIFY PAVEMENT THICKNESSES. ALL TESTING SHALL BE AS ORDERED BY THE CITY ENGINEER AND SHALL BE PAID FOR BY THE CONTRACTOR.
4. NOTIFY THE CITY ENGINEER 48 HOURS MINIMUM PRIOR TO COMMENCING PAVING OPERATIONS..

ASPHALT PAVEMENT

N.T.S.

CITY OF SARATOGA SPRINGS, NEW YORK STANDARD DETAIL Asphalt Pavement	DWG No SS-5

NOTES:

CROSS SLOPE – 1/8" TO 1/4" PER FOOT (MAX. SLOPE 1:50 TYP.) TOWARDS STREET OR A.O.B.E.

MAX. SLOPE ALONG THE LENGTH OF THE WALK SHOULD NOT EXCEED 1:12

SIDEWALK WIDTH TO BE 5' MIN. OR AS ORDERED BY CITY ENGINEER (4' WIDE PROPOSED)

EXISTING SIDEWALK BRICKS TO BE REUSED

TYPE 1 – TYPICAL PEDESTRIAN TRAFFIC LOADING

TYPE 2 – VEHICLE TRAFFIC LOADING (ACROSS DRIVEWAYS)

GENERAL DESIGN CRITERIA FOR CONSTRUCTING SIDEWALKS WITHIN SARATOGA SPRINGS RIGHT OF WAYS:
1.) SIDEWALKS MUST BE PLACED IN THE PUBLIC RIGHT OF WAY AT THE PROPERTY LINE.
2.) SIDEWALKS MUST NOT DROP DOWN WHEN CROSSING A DRIVEWAY.
3.) SIDEWALKS MUST NOT EXTEND ACROSS PUBLIC STREETS OR ALLEYS.

GENERAL DESIGN CRITERIA FOR CONSTRUCTING SIDEWALKS WITHIN SARATOGA COUNTY RIGHT OF WAYS WITHIN SARATOGA SPRINGS:
1.) ALL SIDEWALK INSTALLATIONS MUST BE DESIGNED BY A PROFESSIONAL ENGINEER. PLANS MUST BE APPROVED BY THE COUNTY COMM. OF PUBLIC WORKS.
2.) SIDEWALKS MUST BE PLACED ON THE BACK SIDE OF DITCHES OR 8'(MIN.) FROM THE EDGE OF SHOULDER.
3.) SIDEWALKS MUST BE CONSTRUCTED SO AS NOT TO INTERFERE WITH DRAINAGE.

CITY OF SARATOGA SPRINGS, NEW YORK MODIFIED DETAIL Brick Walk	SS-8A

* AMENDED TOPSOIL MIXTURE SHALL BE IN THE FOLLOWING RATIOS BY VOLUME
20 PARTS TOPSOIL
4 PARTS PEAT MOSS
2 PARTS PEAT HUMUS
1 PART FERTILIZER (10-6-4)

NOTES:

MAJOR TREES (STREET AND SHADE) SHALL BE 3" MIN. D.B.H. (DIAMETER AT BREAST HEIGHT)

MINOR TREES (SMALL ORNAMENTALS) SHALL BE 2" MIN. D.B.H.

SEE SUBDIVISION CONSTRUCTION REGULATIONS FOR RECOMMENDED STREET TREE SPECIES.

ALL PLANT LIST SPECIFICATIONS SHALL INCLUDE THE FOLLOWING INFORMATION, TO BE APPROVED BY THE CITY OF SARATOGA SPRINGS:
BOTANICAL NAME — HEIGHT OR TRUNK DIA.
COMMON NAME — SPACING
TOTAL QUANTITY

TREE PLANTING DETAIL

N.T.S.

APPROVED: PLANNING BOARD	1/13/2010 DATE	CITY OF SARATOGA SPRINGS, NEW YORK STANDARD DETAIL Tree Planting	DWG No L-1

DROP CURB AT RESIDENTIAL DRIVEWAY

N.T.S.

CITY OF SARATOGA SPRINGS, NEW YORK MODIFIED DETAIL Type 1 Driveway (Residential)	DWG No SS-12

BITUMINOUS PAVEMENT TERMINATION

N.T.S.

PAVEMENT SAWCUT

N.T.S.

APPROVED: PLANNING BOARD	1/13/2010 DATE	CITY OF SARATOGA SPRINGS, NEW YORK STANDARD DETAIL Pavement Termination and Sawcut	DWG No SS-6

ALL DIMENSIONS IN mm UNLESS OTHERWISE NOTED

GENERAL NOTES

1. NEW CONSTRUCTION: EMBEDDED PREFORMED TEXTURE WARNING DEVICES SHALL BE EMBEDDED IN THE CONCRETE PER NYSDOT ITEM 608.02. PREFORMED/PRECAST UNITS SHALL BE DETECTO-TILE AS MANUFACTURED BY MEXCON INC. OF WORCESTER, NY OR SIMILAR PRODUCT APPROVED BY NYSDOT.
2. WHERE TEXTURE WARNING DEVICES MUST BE RETROFIT, PREFORMED DEVICES SHALL BE INSTALLED PER NYSDOT ITEM 608.01.
3. THE DETAILS PROVIDED ARE NOT DRAWN TO SCALE, THE QUANTITY OF DOMES DEPICTED ON THE DETECTABLE WARNING FIELD (THE DOMES AND THE ENTIRE 610 mm LEVEL SURFACE) IS FOR ILLUSTRATION ONLY.
4. THE SIZE OF THE DETECTABLE WARNING FIELD SHALL BE 610 mm IN THE DIRECTION OF TRAVEL AND SHALL EXTEND THE FULL WIDTH OF THE CURB RAMP OR FLUSH SURFACE, EXCLUSIVE OF SIDE FLARES.
5. LOCATION OF DETECTABLE WARNINGS. DETECTABLE WARNINGS SHALL BE LOCATED SO THAT THE EDGE OF THE WARNING FIELD NEAREST TO THE ROADWAY OR STREET SURFACE IS 150 mm TO 225 mm (305 WHERE TRAVERSABLE CURB IS USED) FROM THE EDGE OF THE ROADWAY/STREET, OR FROM THE FRONT OF THE DROPPED CURB, WHERE A DROPPED CURB CONTINUES ACROSS THE BOTTOM OF THE SIDEWALK CURB RAMP.
6. DOME ALIGNMENT. DOMES SHALL BE ALIGNED ON A SQUARE GRID IN THE PREDOMINANT DIRECTION OF TRAVEL.
7. COLOR REQUIREMENTS. THE DETECTABLE WARNING FIELD SHALL VISUALLY CONTRAST WITH THE ADJOINING CURB RAMP, OR OTHER ADJACENT WALKWAY SURFACES WHERE THERE IS NO CURB RAMP, EITHER LIGHT-ON DARK, OR DARK-ON-LIGHT AS DEFINED IN THE AMERICANS WITH DISABILITIES ACCESSIBILITY GUIDELINES (A.D.A.A.G. SECT. 1100).
8. OMIT DETECTABLE WARNINGS WHERE THERE WILL BE LESS THAN 610 MM OF SPACE BETWEEN THE DETECTABLE WARNING FIELDS.

DETECTABLE TEXTURE WARNING DETAILS

N.T.S.

APPROVED: PLANNING BOARD	1/13/2010 DATE	CITY OF SARATOGA SPRINGS, NEW YORK STANDARD DETAIL DETECTABLE TEXTURE WARNING DETAILS (BASED ON NYSDOT STANDARD SHEET M608-5R2)	DWG No SS-11

PEDESTRIAN CURB RAMP – TYPE 1
AT STREET CORNER N.T.S.

PEDESTRIAN CURB RAMP – TYPE 2
AT SIDEWALK N.T.S.

PEDESTRIAN CURB RAMP – TYPE 3
AT GRASS STRIP N.T.S.

*DETECTABLE TEXTURE WARNING TO BE IN THE FORM OF DOMES AS SPECIFIED ON NYSDOT STANDARD SHEET M608-5R2 SHOWN ON DETAIL SS-11.
VERIFY LOCATION(S) & TYPE OF DETECTION WITH CITY ENGINEER.

APPROVED: PLANNING BOARD	1/13/2010 DATE	CITY OF SARATOGA SPRINGS, NEW YORK STANDARD DETAIL Pedestrian Curb Ramps	DWG No SS-10

REV.	DATE	BY	CHK.	DESCRIPTION
0	9/08/2016	FTO	JK	ORIGINAL SUBMITTAL

BOUNDARY INFORMATION
BOUNDARY INFORMATION USED IN THE PREPARATION OF THIS PLAT WAS TAKEN FROM THE MAPS REFERENCED ON THIS PLAT.

PER NYS EDUCATION LAW, REXFORD ENGINEERING PLLC AND ITS MEMBERS DO NOT PARTICIPATE IN THE PRACTICE OF LAND SURVEYING NOR ASSUME THE DUTIES GRANTED LICENSED LAND SURVEYORS IN ESTABLISHING REAL PROPERTY BOUNDARIES.

UNAUTHORIZED ALTERATION OR ADDITION TO THIS DRAWING IS A VIOLATION OF SECTION 7209 SUBDIVISION 2, OF THE NEW YORK STATE EDUCATION LAW. ONLY COPIES MADE FROM THE ORIGINAL OF THIS DRAWING BEARING AN ORIGINAL INKED OR EMBOSSED SEAL AND SIGNATURE SHALL BE CONSIDERED TO BE VALID TRUE COPIES.

REXFORD ENGINEERING PLLC
ENGINEERING CONSULTANTS
23 FAIRWAY LANE ·
REXFORD, NY 12148 ·
PHONE: (518) 399-0153 ·
FAX: (253) 484-9242 ·
EMAIL: RE40JK@GMAIL.COM ·

JOHN KLEKOVIC, P.E. LICENSE NO. NY 057060

DRAWN BY: FTO	CITY OF: SARATOGA SPRINGS	SCALE: AS SHOWN
CHECKED BY: JK	COUNTY OF: SARATOGA	DATE: 9/08/16
TAX MAP NO. 165.84-1-1	STATE OF: NEW YORK	REVISION: 0

21 PARK PLACE SUBDIVISION
OWNER: DAVID P. GUARINO & LINDA E. HANER

PROPOSED SITE PLAN
DETAILS

S3
SHEET 1

PROJECT LOCATION MAP
NTS

PROJECT LOCATION MAP
NTS

AERIAL MAP
NTS

CITY OF SARATOGA SPRINGS

1. ALL WORK MUST CONFORM TO ALL FEDERAL, STATE AND CITY CODES, SPECIFICATIONS, ORDINANCES, RULES AND REGULATIONS.

2. THE ELEVATION BASE FOR THE CONTOURS AND BENCHMARKS ARE BASED ON TEH NATIONAL GEODETIC VERTICAL DATUM, 1929.

3. ALL REFUSE, DEBRIS AND MISCELLANEOUS ITEMS TO BE REMOVED SHALL BE LEGALLY DISPOSED OF OFF-SITE BY THE CONTRACTOR TO A LOCATION APPROVED BY THE CITY ENGINEER.

4. THE CONTRACTOR MUST SET UP A PRE-CONSTRUCTION MEETING WITH THE CITY ENGINEER PRIOR TO ANY CONSTRUCTION. CONSTRUCTION INSPECTIONS BY THE DESIGN PROFESSIONAL OR A DESIGNATED REPRESENTATIVE ARE REQUIRED. THE COST OF THE CONSTRUCTION INSPECTIONS IS THE RESPONSIBILITY OF THE APPLICANT/DEVELOPER. AN ESCROW ACCOUNT TO COVER THE COST OF THE PROPOSED SITEWORK MUST BE ESTABLISHED WITH THE CITY PRIOR TO ANY CONSTRUCTION.

5. THE CONTRACTOR MUST OBTAIN A BLASTING PERMIT FROM THE BUILDING INSPECTOR IF ANY BLASTING IS REQUIRED FOR THE PROJECT.

STANDARD NOTES

6. THE CONTRACTOR MUST OBTAIN A STREET OPENING PERMIT ISSUED BY THE DEPARTMENT OF PUBLIC WORKS FOR ANY WORK IN THE STREET OR RIGHT-OF-WAY OF ANY CITY STREET.

7. ALL POINTS OF CONSTRUCTION INGRESS OR EGRESS SHALL BE MAINTAINED TO PREVENT TRACKING OR FLOWING OF SEDIMENT OR DEBRIS ONTO A PUBLIC ROAD.

8. NO CERTIFICATE OF OCCUPANCY WILL BE ISSUED UNTIL ALL SITE WORK HAS BEEN COMPLETED IN ACCORDANCE WITH THE APPROVED PLANS; AND AN AS-BUILT DRAWING HAS BEEN PREPARED IN ACCORDANCE WITH THE REQUIREMENTS OF THE CITY ENGINEER.

9. THE APPLICANT MUST VERIFY THAT THE PROPOSED PROJECT CAN ACCOMMODATE THE TURNING MOVEMENTS OF ANY FIRE TRUCK THAT THE FIRE DEPARTMENT SO DESIGNATES.

SHEET INDEX

V1 - VACINITY PLAN

S1 - PROPOSED SUBDIVISION PLAT

S2 - PROPOSED SEDIMENT & EROSION CONTROL PLAN

S3 - SITE PLAN DETAILS

GENERAL NOTES

1.

2. PRIOR TO COMMENCING ANY EXCAVATION WORK, THE CONTRACTOR SHALL CONTACT U.F.P.O. (1-800-962-7962) AND THE PROPER LOCAL AUTHORITIES OR RESPECTIVE UTILITY COMPANY HAVING JURISDICTION TO CONFIRM THE LOCATION OF ALL EXISTING UTILITIES BEFORE COMMENCING WORK. ANY COSTS INCURRED BY THE CONTRACTOR DUE TO FAILURE TO CONTACT THE PROPER AUTHORITIES SHALL BECOME THE RESPONSIBILITY OF THE CONTRACTOR.

3. THE LOCATIONS OF ALL UNDERGROUND UTILITIES SHOWN ON THIS PLAN ARE DIAGRAMMATIC ONLY. CONTRACTOR SHALL COORDINATE LOCATION OF ALL UTILITIES (LINES, DUCTS, CONDUITS, SLEEVES, FOOTINGS, ETC.) WITH LOCATIONS OF PROPOSED LANDSCAPE ELEMENTS (WALLS, FENCE, FOOTINGS, TREE ROOTBALLS, PROPOSED LIGHTING FOOTINGS, ETC.). EXCAVATION REQUIRED WITHIN PROXIMITY OF UTILITY LINES SHALL BE DONE BY HAND. ANY DAMAGE AND INCURRED COSTS DUE TO FAILURE OF THE CONTRACTOR TO CONTACT THE PROPER AUTHORITIES SHALL BE BORNE BY THE CONTRACTOR.

4. THE GENERAL CONTRACTOR SHALL VERIFY ALL SITE CONDITIONS IN THE FIELD AND REPORT ANY DISCREPANCY BETWEEN THE PLANS AND THE ACTUAL FIELD CONDITIONS TO THE LANDSCAPE ARCHITECT.

5. LIMIT OF WORK LINE IS NOTED ON DRAWINGS. CONTRACTOR IS RESPONSIBLE FOR ALL DAMAGE DUE TO OPERATIONS INSIDE AND OUTSIDE OF THE CONTRACT LIMIT LINE. ANY AREAS OUTSIDE THE LIMIT OF WORK THAT ARE DISTURBED SHALL BE RESTORED TO ITS ORIGINAL CONDITION AT NO ADDITIONAL COST TO THE OWNER. CONTRACTOR SHALL MEET LINE AND GRADE OF EXISTING CONDITIONS AT LIMIT OF WORK LINE. IF NO LIMIT OF WORK IS SHOWN, THE PROPERTY LINE SHALL BE THE LIMIT OF WORK.

6. THE CONTRACTOR SHALL ESTABLISH PERMANENT BENCH MARKS. MAINTAIN ALL ESTABLISHED BOUNDS AND BENCH MARKS AND REPLACE AS DIRECTED ANY WHICH ARE DESTROYED OR DISTURBED.

7. CONTRACTOR SHALL EMPLOY SPECIAL CARE IN SCHEDULING CONSTRUCTION SO AS TO MAINTAIN EXISTING VEHICULAR TRAFFIC PATTERNS, AND MINIMIZE DISRUPTION TO SURROUNDING PEDESTRIAN TRAFFIC. CONTRACTOR SHALL EMPLOY SPECIAL CARE TO PROTECT SAFETY OF PEDESTRIANS INSIDE AND OUTSIDE OF THE LIMIT OF WORK LINE.

8. VARIOUS PERMITS ARE REQUIRED FOR THIS WORK. IT IS THE CONTRACTOR'S RESPONSIBILITY TO ENSURE ALL REQUIRED PERMITS FROM ALL JURISDICTIONS AFFECTED BY THIS WORK ARE IN PLACE PRIOR TO CONSTRUCTION. FOR PERMITS ALREADY ISSUED, CONTRACTOR SHALL OBTAIN COPIES OF PERMITS AND STRICTLY ADHERE TO PERMIT CONDITIONS. PERMITS THAT ARE OUTSTANDING SHALL BE SECURED BY THE CONTRACTOR AND COORDINATED WITH THE OWNER'S REPRESENTATIVE.

9. ALL ALTERATIONS TO THESE DRAWINGS MADE IN THE FIELD DURING CONSTRUCTION SHALL BE RECORDED BY THE CONTRACTOR ON "AS-BUILT DRAWINGS," AS SPECIFIED

10. STORAGE AREAS FOR THE GENERAL CONTRACTOR'S EQUIPMENT AND MATERIALS SHALL BE LOCATED WITHIN THE LIMITS OF WORK AS SHOWN ON THE PLANS OR AS APPROVED BY THE OWNER'S REPRESENTATIVE.

11. SHOULD ANYTHING BE OMITTED FROM THE PLANS WHICH IS NECESSARY FOR A COMPLETE UNDERSTANDING OF THE WORK, OR SHALL ANY ERROR APPEAR IN THE VARIOUS INSTRUMENTS FURNISHED OR IN THE WORK BY OTHER CONTRACTORS AFFECTING THE WORK COVERED HEREBY, THE CONTRACTOR SHALL AND WILL PROMPTLY NOTIFY THE OWNER'S REPRESENTATIVE, AND IN THE EVENT OF THE CONTRACTOR'S FAILURE TO DO SO, HE SHALL AND WILL MAKE GOOD OF ANY DAMAGE OR DEFECT IN HIS WORK CAUSED THEREBY.

12. PROVIDE EXPANSION JOINTS AT ALL CURBS, WALLS, STEPS, LIGHT POLE BASES, PULL BOXES, MANHOLES, TRAFFIC CONTROLLER BOXES AND AS SHOWN ON PLAN.

13. CONTRACTOR SHALL MAINTAIN THE INTEGRITY OF ALL EXISTING INFRASTRUCTURE FOR THE DURATION OF CONSTRUCTION.

14. CONTRACTOR SHALL PROTECT AND SUSTAIN IN NORMAL SERVICE ALL EXISTING UTILITIES, STRUCTURES, EQUIPMENT, ROADWAYS AND DRIVEWAYS.

15. THE CONTRACTOR SHALL BE RESPONSIBLE TO COORDINATE HIS EFFORTS OF DEMOLITION, REMOVALS AND OR RELOCATION WORK WITH ALL TRADES, IF APPLICABLE. CONSULT ALL DRAWINGS AND SPECIFICATIONS FOR COORDINATION REQUIREMENTS BEFORE COMMENCING CONSTRUCTION.

16. CONTRACTOR TO COMPLY WITH ALL OSHA AND OTHER STATE AND LOCAL SAFETY REQUIREMENTS DURING CONSTRUCTION (PROPER SHORING, ETC.).

17. CONTRACTOR SHALL MAINTAIN PROPER SIGNS, BARRICADES, FENCES, TO PROPERLY PROTECT THE WORK, EQUIPMENT, PERSONS AND PROPERTY FROM DAMAGE. ALL DAILY TRAFFIC IN THE VICINITY OF THE SITE SHALL NOT BE IMPEDED.

MAP REFERENCES:
1. "SUBDIVISION PLAN, 21 PARK PLACE SUBDIVISION", MAP NO. 2016-07-04, REVISION –, 08/10/2016, BY SURVEY ASSOCIATES, LLC. DANIEL C. WHEELER L.S.

2. SITE PLAN FOR TORANI RESIDENCE, 21 PARK PLACE, SARATOGA SPRINGS, NEW YORK ZONING: R-4. EXISTING CONDITIONS AND PROPOSED OFF-STREET PARKING. DATED JAN 20 1987. WAYNE G. PETERSON, ARCHITECT. APPROVED 3/3/1987.

PB# XX.XXX

REV.	DATE	BY	CHK.	DESCRIPTION
0	9/06/2016	FTO	JK	ORIGINAL SUBMITTAL

BOUNDARY INFORMATION
BOUNDARY INFORMATION USED IN THE PREPARATION OF THIS PLAT WAS TAKEN FROM THE MAPS REFERENCED ON THIS PLAT.

PER NYS EDUCATION LAW, REXFORD ENGINEERING PLLC AND ITS MEMBERS DO NOT PARTICIPATE IN THE PRACTICE OF LAND SURVEYING NOR ASSUME THE DUTIES GRANTED LICENSED LAND SURVEYORS IN ESTABLISHING REAL PROPERTY BOUNDARIES.

UNAUTHORIZED ALTERATION OR ADDITION TO THIS DRAWING IS A VIOLATION OF SECTION 7209 SUBDIVISION 2, OF THE NEW YORK STATE EDUCATION LAW. ONLY COPIES MADE FROM THE ORIGINAL OF THIS DRAWING BEARING AN ORIGINAL INKED OR EMBOSSED SEAL AND SIGNATURE SHALL BE CONSIDERED TO BE VALID TRUE COPIES.

REXFORD ENGINEERING PLLC
ENGINEERING CONSULTANTS
23 FAIRWAY LANE ·
REXFORD, NY 12148 ·
PHONE: (518) 399-0153 ·
FAX: (253) 484-9242 ·
EMAIL: RE4UJK@GMAIL.COM ·

JOHN KLEKOVIC, P.E. LICENSE NO. NY 057060

DRAWN BY: FTO	CITY OF: SARATOGA SPRINGS	SCALE: 1" = 40'
CHECKED BY: JK	COUNTY OF: SARATOGA	DATE: 9/06/16
TAX MAP NO. 165.84-1-1	STATE OF: NEW YORK	REVISION: 0

21 PARK PLACE SUBDIVISION
OWNER: DAVID P. GUARINO & LINDA E. HANER

PROPOSED VACINITY MAP

V1
SHEET 1

21 PARK PLACE SUBDIVISION

Proposed Deed Restricted Design Guidelines

10/27/16

In acknowledgement that the newly created lot at #21 Park Pl. is located adjacent to a known Historic District within the City of Saratoga Springs, the following deed restricted design guidelines shall be put into place. Such restrictions are intended to provide confidence that any new residential structure constructed on this lot will be consistent in architectural character with the surrounding neighborhood.

A. Height: The maximum building height shall be 45'. The measurements and term "height" shall be as defined within the current City of Saratoga Springs Zoning Code.

B. Scale: The maximum principal building coverage shall be 25% as outlined and defined within the current City of Saratoga Springs Zoning Code.

C. Mass & Open Space:
   1) Accessory Structure: Promoting open space and a view towards the interior of the lot, the minimum distance between the principal structure any accessory structure shall be 20'.
   2) Porches: Acknowledging the important role that porches play within Saratoga architecture, including connectivity and interaction with the neighborhood, a porch of minimum of 30 sq.ft. shall be located on each street facing façade of the principal structure. The porch may wrap around the corner of the structure with a minimum cumulative size of 60 sq.ft.
   3) Mechanicals: Encouraging a pedestrian friendly enjoyment of the neighborhood, all mechanicals shall be placed in a manner to limit view from Park Pl. and Regent St. as best possible. Roof mounted vents shall be placed on the North side of the roof area and not towards Park Pl. AC units, generators or other mechanical units shall be placed at ground level and located in side yards, no closer to the street than the principal structure, and shielded from view with landscaping or a fence.

D. Proportion:
   1) The appearance of a structure's mass may be visually reduced by the inclusion of breaks and fluctuations in street facing building facades and materials. As such, street facing facades shall be limited to a maximum length of 30' before which a break or fluctuation in either the building wall or building materials is required.
   2) Fenestration also allows for a visual break in the appearance of a wall mass. Therefore, the length of a wall area without fenestration shall be limited to 15'.
   3) Roof Pitch is another important visual element which adds to the visual proportions and architectural character of a structure. Acknowledging that the majority of the homes adjacent to the site have peaked roofs, and to assure consistency with the character of the neighborhood, the main roof of any new structures constructed shall have no less than a 5/12 pitch. Exceptions may be allowed for porch roofs or other minor architectural details or bump outs consistent with the overall design.

E. Directional Expression:
   1) The principal structure shall have a primary directional expression towards Park Pl. with a secondary expression towards Regent St., including porches along each street front (as listed above) to encourage interaction with the neighborhood and directing pedestrians and guests towards the main entry.
   2) Architectural elements should also be consistent with the dominant or vertical expression of neighboring buildings, including gable elements towards both streets.

F. Architectural Rhythm: Acknowledging the importance of architectural rhythm within the adjacent Historic District, attention shall be given to architectural openings proposed for the principal structure; The majority of windows, doors, arches and porch framing should be constructed with the height being greater than or equal to the width. This shall not preclude or restrict the use of transoms or decorative windows.

G. Treatment of Major Elements:
   1) Doors shall respect the architectural character of the structure and neighborhood.
   2) Windows shall be consistent in style, material and ratio throughout the structure.
   3) Porches & Balconies shall be constructed of wood, metal or concrete. Should a grade level porch be open below, the area shall be covered or enclosed with panels or lattice. No pressure treated wood shall be visible. All visible lumber shall be exterior paint grade. Stairs shall have solid risers & sides.
   4) Exterior Materials shall be compatible with those traditionally used in the neighboring area. Contemporary materials are acceptable provided the overall texture and details are compatible with neighboring structures.
   5) Sidewalks: On site sidewalks shall be brick, stone or pavers