CITY OF SARATOGA SPRINGS
PLANNING BOARD
City Hall - 474 Broadway
Saratoga Springs, New York 12866
Tel: 518-587-3550 fax: 518-580-9480
www.saratoga-springs.org

MARK TORPEY, Chair
ROBERT F. BRISTOL, Vice-Chair
TOM L. LEWIS
CLIFFORD VAN WAGNER
HOWARD PINSLEY
JANET CASEY
JAMIN TOTINO
AMY DURLAND, Alternate
RUTH HORTON, Alternate

# Planning Board Meeting
## City Council Room – 7:00 PM

## Agenda

Planning Board Meeting – Tuesday, November 22, 2016

City Council Room – 7:00 PM

Applications Under Consideration

A. 16.040 West Ave Mixed-Use Development
**106-120 West Ave,** Special use permit for mixed-use development within the T-5 Neighborhood Center (T-5) District.

Documents:

16.040 WESTAVEMIXED-USESUP-APP_REDACTED.PDF
16.040 WESTAVEMIXEDUSESUP_CDTACORR10-27-16.PDF

B. 16.041 Slack Chemical Company
**3 Unlimited Drive**, Site plan review of 29,900SF additional of warehouse use within the Industrial- General (IND-G) District.

Documents:

16.041 SLACKCHEMCOEXPANSION_APP_REDACTED.PDF

C. 16.047.1 Southern Subdivision
**124 York Ave,** Advisory Opinion to ZBA on 2 lot residential subdivision within the Urban Residential-3 (UR-3) District.

Documents:

16.047.1 SOUTHERNSUBDIVISION_ZBAREQFORADVISOPIN.PDF
16.047.1 SOUTHERNRESIDENCESUBDIVISION_ZBAAPP_REDACTED.PDF
16.047.1 SOUTHERNRESIDENCESUB_MDILLONCORR_REDACTED.PDF

Approval Of Minutes

Workshop: Monday, November 21, 2016 At 5pm In The City Council Room

Salute To Flag

Next Meeting: Thursday, December 8, 2016 (W/ December 5th Caravan & Workshop)

# Advance Engineering & Surveying, PLLC

Consulting in: Civil & Environmental Engineering • Land Surveying • Land Development
11 Herbert Drive
Latham, N.Y. 12110
[redacted]

Nicholas Costa, PE
John P. Petrucco, LS


October 20, 2016

Ms. Kate Maynard, Principal Planner
City of Saratoga Springs
Office of Planning and Economic Development
City Hall
474 Broadway
Saratoga Springs, NY 12866

Re: Special Use Permit for
Mixed Use Development
at West Avenue, Saratoga Springs, NY

Dear Ms. Maynard:

As per our conversation with regards to the Special Use Permit for the above referenced project site we are enclosing the following items:

1. Three (3) Application for Special Use Permit;
2. Three (3) SEQR Environmental Assessment Form;
3. Three (3) Complete Sets of Plans;
4. Three (3) Water Service Connection Agreement;
5. Review fee in the amount of $750.00; and
6. CD with digital copy of above listed documents.

We are also enclosing the original signed Application for Site Plan review with the original signatures of the applicant and the property owner. We trust that the enclosed package is complete and will allow you to commence the review. If there are any questions or you require additional information, please do not hesitate to contact our office. Thank you for your continued assistance.

Sincerely,

Nicholas Costa
Advance Engineering & Surveying, PLLC

NC/dac
Enclosures
cc: Mr. Bill Barber, w/encl.
corres.maynard.10.20.16.docx

HANDWRITTEN APPLICATIONS WILL NOT BE ACCEPTED.

# CITY OF SARATOGA SPRINGS

PLANNING BOARD

City Hall - 474 Broadway
Saratoga Springs, New York 12866-2296
Tel: 518-587-3550 fax: 518-580-9480
http://www.saratoga-springs.org

[FOR OFFICE USE]

(Application #)

(Date received)

## APPLICATION FOR: SPECIAL USE PERMIT

(Rev: 07/2016)

Project Name: Mixed-Use Development between 106 and 120 West Avenue

Property Address/Location: East Side of West Avenue; south of St. Charles Place; and north of Grand Avenue

Tax Parcel #: 165.72-1-25.1 Zoning District: T-5
*(for example: 165.52-4-37)*

Proposed Use: Mixed Use ( Commercial and Residential)

Type of Special Use Permit: ☑ Permanent ☐ Temporary ☐ Renewable ☐ Modification

| | APPLICANT(S)* | OWNER(S) *(If not applicant)* | ATTORNEY/AGENT |
|---|---|---|---|
| Name | AB Acquisitions (Bill Barber) | West Ave Dev Assoc LLC | Nicholas Costa PE |
| Address | 298 Troy-Schenectady Road, Suite 201 | 120 West Ave. Suite 301 | 11 Herbert Drive |
| | Latham, NY 12110 | Saratoga Springs, NY 12866 | Latham, NY 12110 |
| Phone | [redacted] | | [redacted] |
| Email | [redacted] | | |

Identify primary contact person: ☑ Applicant ☐ Owner ☐ Agent

* An applicant must be the property owner, lessee, or one with an option to lease or purchase the property in question.

**Please check the following to affirm information is included with submission.**

☑ Sketch Plan Attached:
Applicant is encouraged to submit sketch plans showing features of the site and /or neighborhood and illustrate proposed use.

☑ Environmental Assessment Form:
All applications must include a completed SEQR Short or Long Form. SEQR Forms can be completed at http://www.dec.ny.gov/permits/6191.html.

☑ Water Service Connection Agreement- For all projects including new water connections to the City system, a copy of a signed water service connection fee agreement with the City Department of Public Works is required and MUST be submitted with this application.

☑ Application Fee: $750.00 ..... $250-modifications (check box)
A check for the total amount made payable to: "Commissioner of Finance" MUST accompany this application.

☑ 3 hard copies (*1 signed original) and one electronic copy (PDF) of complete application and ALL attachments.

Submission Deadline - Check City's website (www.saratoga-springs.org) for application deadlines and meeting dates.

Does any City officer, employee or family member thereof have a financial interest (as defined by General Municipal Law Section 809) in this application? YES ☐ NO ☑. If YES, a statement disclosing the name, residence, nature and extent of this interest must be filed with this application.

I, the undersigned owner, leasee or purchaser under contract for the property, hereby request Special Use Permit approval by the Planning Board for the identified property above. I agree to meet all requirements under Section 240-7.1 of the Zoning Code of the City of Saratoga Springs.

Furthermore, I hereby authorize members of the Planning Board and designated City staff to enter the property associated with this application for purposes of conducting any necessary site inspections relating to this application.

Applicant Signature: _____ Date: 10/20/16

If applicant is not current owner, owner must also sign.

Owner Signature: _____ Date: 10/20/16

# *Short Environmental Assessment Form*
## *Part 1 - Project Information*

## Instructions for Completing

**Part 1 - Project Information. The applicant or project sponsor is responsible for the completion of Part 1.** Responses become part of the application for approval or funding, are subject to public review, and may be subject to further verification. Complete Part 1 based on information currently available. If additional research or investigation would be needed to fully respond to any item, please answer as thoroughly as possible based on current information.

Complete all items in Part 1. You may also provide any additional information which you believe will be needed by or useful to the lead agency; attach additional pages as necessary to supplement any item.

| **Part 1 - Project and Sponsor Information** | | |
|---|---|---|
| Name of Action or Project:<br>Mixed-Use Development between 106-120 West Avenue | | |
| Project Location (describe, and attach a location map):<br>Between 106-120 West Avenue, Saratoga Springs, NY | | |
| Brief Description of Proposed Action:<br>Construction of Mixed Use Building with retail and residential space | | |
| Name of Applicant or Sponsor:<br>AB Acquisitions ( Bill Barber) | Telephone: [redacted]<br>E-Mail: [redacted] | |
| Address:<br>298 Troy-Schenectady Road | | |
| City/PO:<br>Latham | State:<br>NY | Zip Code:<br>12110 |

| | NO | YES |
|---|---|---|
| 1. Does the proposed action only involve the legislative adoption of a plan, local law, ordinance, administrative rule, or regulation?<br>If Yes, attach a narrative description of the intent of the proposed action and the environmental resources that may be affected in the municipality and proceed to Part 2. If no, continue to question 2. | ☑ | ☐ |
| 2. Does the proposed action require a permit, approval or funding from any other governmental Agency?<br>If Yes, list agency(s) name and permit or approval:<br>City of Saratoga Springs Building Department - Building Permit | ☐ | ☑ |

3.a. Total acreage of the site of the proposed action? 1.148+/- acres
b. Total acreage to be physically disturbed? 1.14+/- acres
c. Total acreage (project site and any contiguous properties) owned or controlled by the applicant or project sponsor? 1.148+/- acres

4. Check all land uses that occur on, adjoining and near the proposed action.
☑ Urban ☐ Rural (non-agriculture) ☐ Industrial ☑ Commercial ☐ Residential (suburban)
☐ Forest ☐ Agriculture ☐ Aquatic ☐ Other (specify): _____
☐ Parkland

| | NO | YES | N/A |
|---|---|---|---|
| 5. Is the proposed action, | | | |
| a. A permitted use under the zoning regulations? | ☐ | ☑ | ☐ |
| b. Consistent with the adopted comprehensive plan? | ☐ | ☑ | ☐ |

| | NO | YES |
|---|---|---|
| 6. Is the proposed action consistent with the predominant character of the existing built or natural landscape? | ☐ | ☑ |
| 7. Is the site of the proposed action located in, or does it adjoin, a state listed Critical Environmental Area? If Yes, identify: _____ | ☑ | ☐ |
| 8. a. Will the proposed action result in a substantial increase in traffic above present levels? | ☑ | ☐ |
| b. Are public transportation service(s) available at or near the site of the proposed action? | ☐ | ☑ |
| c. Are any pedestrian accommodations or bicycle routes available on or near site of the proposed action? | ☐ | ☑ |
| 9. Does the proposed action meet or exceed the state energy code requirements? If the proposed action will exceed requirements, describe design features and technologies: _____ | ☑ | ☐ |
| 10. Will the proposed action connect to an existing public/private water supply? If No, describe method for providing potable water: _____ | ☐ | ☑ |
| 11. Will the proposed action connect to existing wastewater utilities? If No, describe method for providing wastewater treatment: _____ | ☐ | ☑ |
| 12. a. Does the site contain a structure that is listed on either the State or National Register of Historic Places? | ☑ | ☐ |
| b. Is the proposed action located in an archeological sensitive area? | ☐ | ☑ |
| 13. a. Does any portion of the site of the proposed action, or lands adjoining the proposed action, contain wetlands or other waterbodies regulated by a federal, state or local agency? | ☑ | ☐ |
| b. Would the proposed action physically alter, or encroach into, any existing wetland or waterbody? If Yes, identify the wetland or waterbody and extent of alterations in square feet or acres: _____ | ☑ | ☐ |

14. Identify the typical habitat types that occur on, or are likely to be found on the project site. Check all that apply:
☐ Shoreline ☐ Forest ☐ Agricultural/grasslands ☐ Early mid-successional
☐ Wetland ☐ Urban ☐ Suburban

| | NO | YES |
|---|---|---|
| 15. Does the site of the proposed action contain any species of animal, or associated habitats, listed by the State or Federal government as threatened or endangered? | ☑ | ☐ |
| 16. Is the project site located in the 100 year flood plain? | ☑ | ☐ |
| 17. Will the proposed action create storm water discharge, either from point or non-point sources? If Yes, a. Will storm water discharges flow to adjacent properties? ☐ NO ☑ YES | ☐ | ☑ |

b. Will storm water discharges be directed to established conveyance systems (runoff and storm drains)? ☐ NO ☑ YES
If Yes, briefly describe:
Stormwater detention will be provided on-site by utilizing underground stormwater detention and a proposed sand filter will be utilized for water quality treatment. Discharge form the system will be controlled and directed into closed drainage systems that are located on West Avenue and at the rear of the site.

| | NO | YES |
|---|---|---|
| 18. Does the proposed action include construction or other activities that result in the impoundment of water or other liquids (e.g. retention pond, waste lagoon, dam)?<br>If Yes, explain purpose and size: | ✓ | |
| 19. Has the site of the proposed action or an adjoining property been the location of an active or closed solid waste management facility?<br>If Yes, describe: | ✓ | |
| 20. Has the site of the proposed action or an adjoining property been the subject of remediation (ongoing or completed) for hazardous waste?<br>If Yes, describe: | ✓ | |

**I AFFIRM THAT THE INFORMATION PROVIDED ABOVE IS TRUE AND ACCURATE TO THE BEST OF MY KNOWLEDGE**

Applicant/sponsor name: AB Acquisitions Date: 09·21·16

Signature: N. Costa Agent for Applicant

PRINT FORM

# EAF Mapper Summary Report

Friday, April 22, 2016 2:34 PM

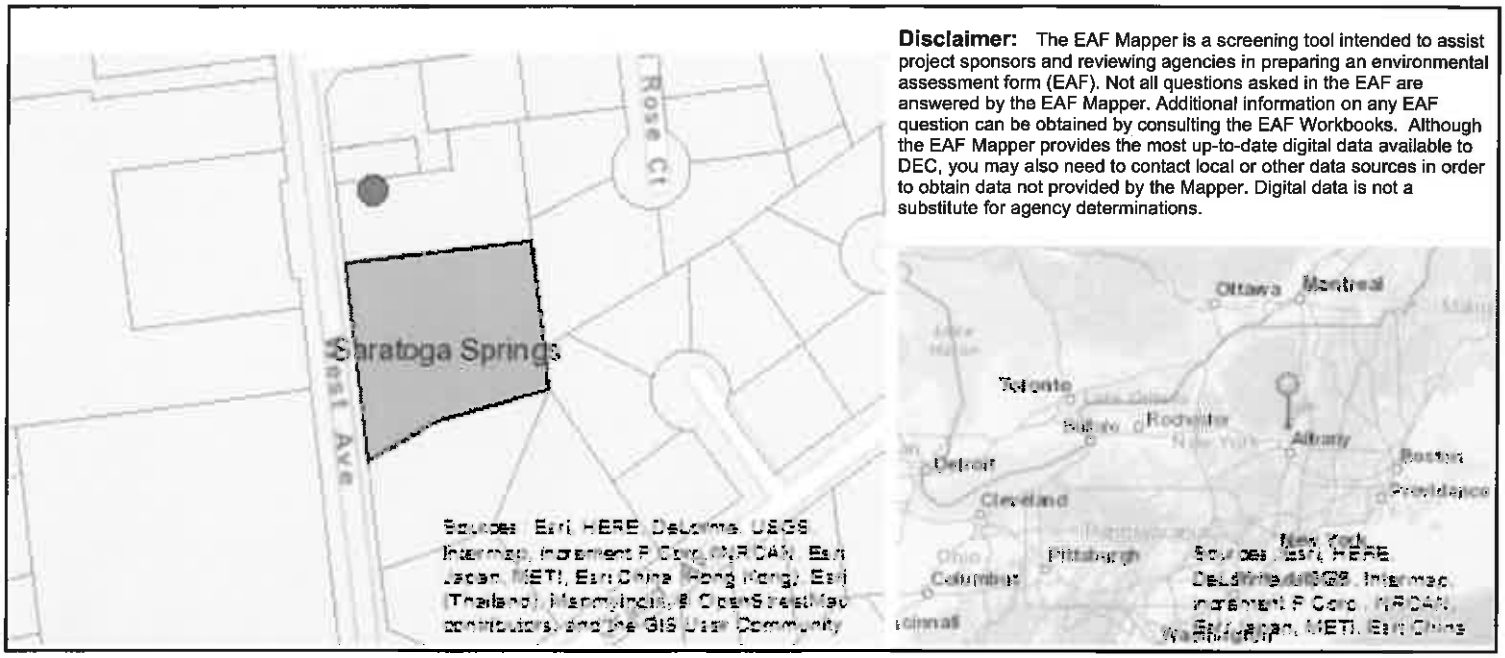


**Disclaimer:** The EAF Mapper is a screening tool intended to assist project sponsors and reviewing agencies in preparing an environmental assessment form (EAF). Not all questions asked in the EAF are answered by the EAF Mapper. Additional information on any EAF question can be obtained by consulting the EAF Workbooks. Although the EAF Mapper provides the most up-to-date digital data available to DEC, you may also need to contact local or other data sources in order to obtain data not provided by the Mapper. Digital data is not a substitute for agency determinations.

| | |
|---|---|
| Part 1 / Question 7 [Critical Environmental Area] | No |
| Part 1 / Question 12a [National Register of Historic Places] | No |
| Part 1 / Question 12b [Archeological Sites] | Yes |
| Part 1 / Question 13a [Wetlands or Other Regulated Waterbodies] | No |
| Part 1 / Question 15 [Threatened or Endangered Animal] | No |
| Part 1 / Question 16 [100 Year Flood Plain] | Digital mapping data are not available or are incomplete. Refer to EAF Workbook. |
| Part 1 / Question 20 [Remediation Site] | No |

# City of Saratoga Springs
**OFFICE OF PUBLIC WORKS**
**5 Lake Avenue**
**Saratoga Springs, New York 12866**

**Phone 518-587-3550 ** Fax 518-587-2417**
**www.saratoga-springs.org**

ANTHONY J. SCIROCCO
COMMISSIONER

TIMOTHY J. COGAN
DEPUTY COMMISSIONER


## NEW WATER SERVICE CONNECTION
## AGREEMENT & APPLICATION FORM

Property Owner's Name: West Ave Dev Assoc LLC

Project Name (if applicable): Mixed-Use Development between 106 and 120 West A

Property Address: East Side of West Avenue; south of St. Charles Place, and north of Grand Avenue

Tax Map#: 165.72-1-25.1

**Size of Tap (check one below):**

☐ ¾" ☐ 1" ☑ **Greater than 1"**

A unit of water shall be defined as fourteen thousand (14,000) cubic feet of water per year.

Contact the Water Dept at ext. 2502 for assistance with water use estimation and meter specifications before signing below.

Number of Dwellings: _____

Estimated Cubic Feet of Water per Year: 406,510

To be completed in full without any contingencies or protest, on or before the Building Inspector approval of the rough plumbing, including the installation of the water meter, or at the time of the issuance of a tapping permit.

The undersigned represents to the City that they have full and complete authority to execute this document and find and commit the developer to abide by the City Water Ordinance. This agreement shall be binding on all of the undersigned transferees.

The undersigned acknowledges that a copy of this document will be delivered to all appropriate and necessary governmental entities.

Authorized Signature: _____ Company Name: AB Acquisitions

Company Address: 298 Troy-Schenectady Road, Suite 201, Latham, NY 12110

Phone Number: [redacted] Fax Number: _____ Date: 10-20-2016

Department of Public Works Approval: _____ Date: 10/20/16

# PRELIMINARY ENGINEERING PLANS FOR:

# MIXED USE DEVELOPMENT

# WEST AVENUE

## CITY OF SARATOGA SPRINGS * SARATOGA COUNTY * NEW YORK

## SEPTEMBER 2016

| SHEET INDEX: | | |
|---|---|---|
| SHEET 1 | COVER | COVER SHEET |
| SHEET 2 | EXIST | EXISTING CONDITIONS & REMOVALS |
| SHEET 3 | SITE | SITE PLAN |
| SHEET 4 | GRD | GRADING & UTILITY PLAN |
| SHEET 5 | LNDSC | LANDSCAPE & LIGHTING PLAN |
| SHEET 6 | DET - 1 | CONSTRUCTION DETAILS - 1 |
| SHEET 7 | DET - 2 | CONSTRUCTION DETAILS - 2 |
| SHEET 8 | DET - 3 | CONSTRUCTION DETAILS - 3 |
| SHEET 9 | DET - 4 | CONSTRUCTION DETAILS - 4 |
| SHEET 10 | ERO | EROSION CONTROL PLAN |

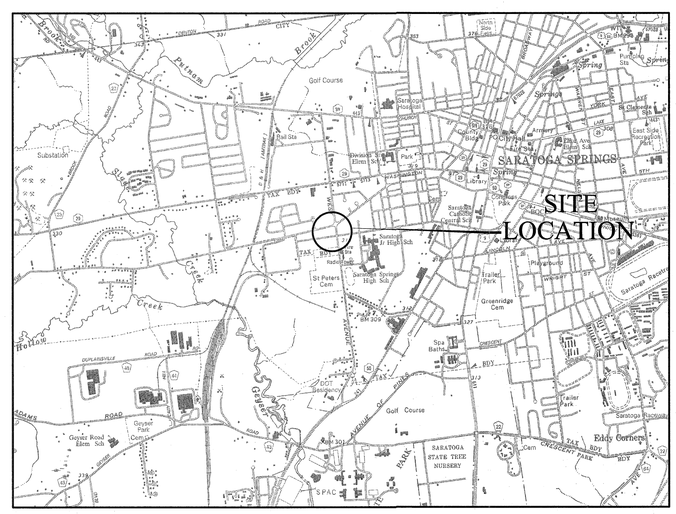


APPLICANT:
AB ACQUISITIONS, LLC
298 TROY SCHENECTADY RD.
LATHAM, N.Y. 12110

OWNER:
WEST AVENUE DEVELOPMENT ASSOCIATES, LLC
120 WEST AVENUE, SUITE 201
SARATOGA SPRINGS, N.Y. 12866

CITY OF SARATOGA SPRINGS

Dig Safely. New York
Call 811
before you dig

| NO. | REVISION | BY | APPD. | DATE |
|---|---|---|---|---|
| A | ISSUED FOR SKETCH PLAN REVIEW | R.D.D. | N.C. | 4-25-16 |
| B | ISSUED FOR SITE PLAN REVIEW | R.D.D. | N.C. | 9-9-16 |

© COPYRIGHT 2016
ADVANCE ENGINEERING & SURVEYING, PLLC
ALL RIGHTS RESERVED.
UNAUTHORIZED REPRODUCTION IS A VIOLATION OF APPLICABLE LAWS.

It is a violation of the Rules of the State of New York for any person, unless acting under the direction of a Licensed Professional Engineer, to alter this document in any way.

9-12-16

Design of:
ADVANCE ENGINEERING & SURVEYING, PLLC
CONSULTING IN -
CIVIL & ENVIRONMENTAL ENGINEERING
LAND SURVEYING & DEVELOPMENT
COMMERCIAL AND RESIDENTIAL
11 HERBERT DRIVE, LATHAM, N.Y. 12110
E-MAIL: nicostaje@gmail.com
PHONE: (518) 698-3772
NICHOLAS COSTA, P.E.

COVER SHEET
MIXED USE DEVELOPMENT

WEST AVENUE CITY OF SARATOGA SPRINGS
COUNTY OF SARATOGA NEW YORK

DATE: SEPTEMBER, 2016
SCALE: NONE
SHEET 1 OF 9

SHEET NO.
COVER
1 OF 10 16046-SITE

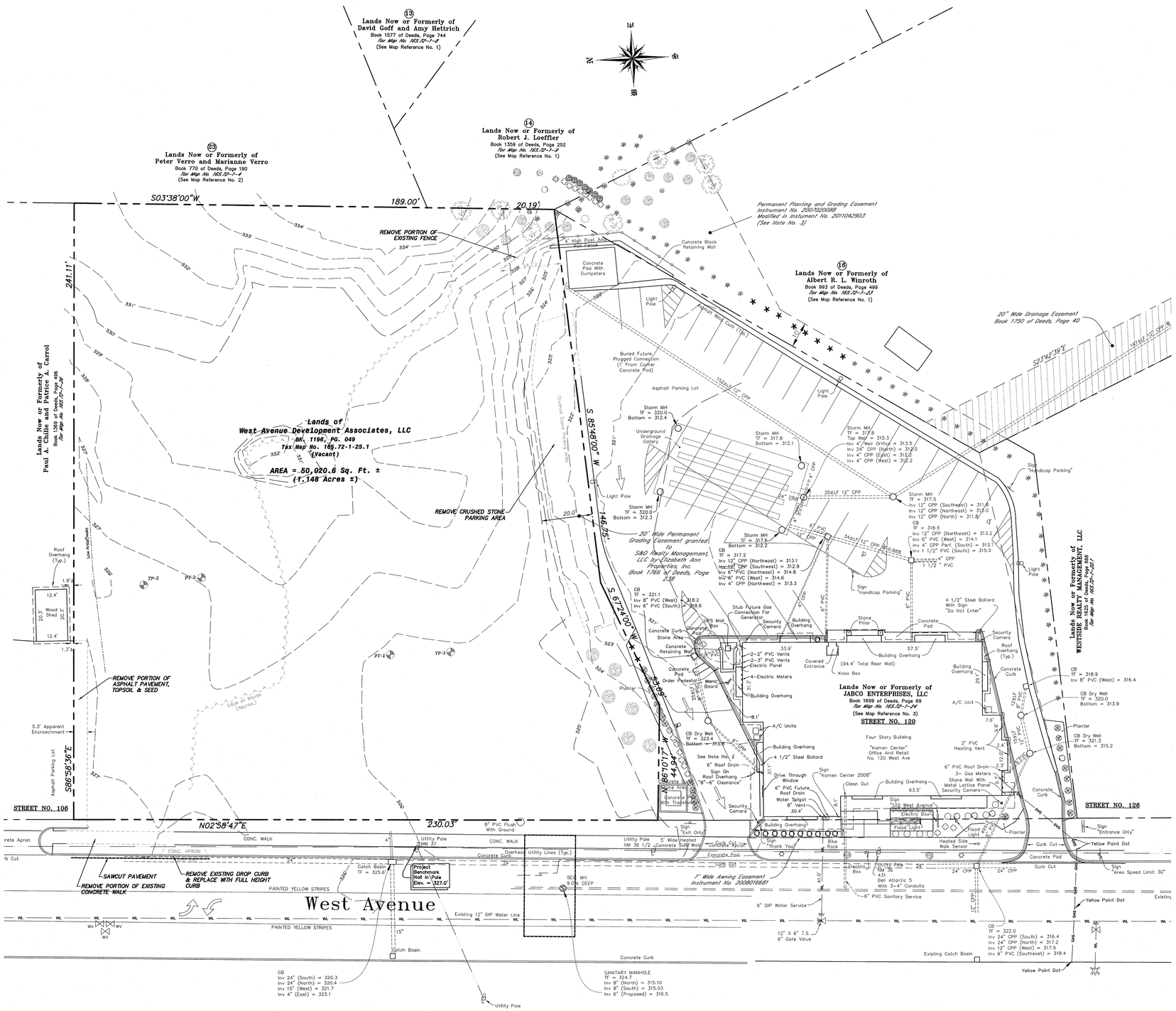


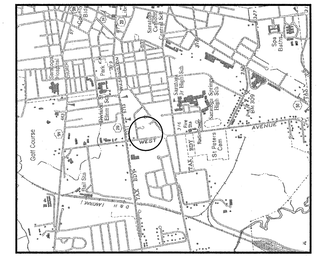

SITE LOCATION MAP
1" = 2000'±

## SURVEY NOTES:

1. BASE MAPPING INFORMATION SHOWN HEREON WAS PERFORMED BY VAN DUSEN & STEVES LAND SURVEYORS AND DOES NOT CONSTITUTE A SURVEY CONDUCTED BY ADVANCE ENGINEERING & SURVEYING, PLLC.

2. TAX MAP DESIGNATION: 165.72 – 1 – 25.1.

## SITE SOILS DATA:

Test Pits dug on 8/9/16

TP#1
0–8" topsoil
8–24" Brown fine sandy loam
24–42" cinders, brick, conc block, etc.
42–76" Reddish brown sandy loam, bottom layer wet
76–84" grey clay
76" groundwater

TP#2
0–16" Dark brown sandy loam topsoil
16–48" Light brown fine sandy loam
48–84" Reddish brown fine sandy loam
84–96" Reddish brown fine sandy loam, wet
96" Gray clay (wet)

PT#1
Tested from 4–6'in the reddish brown sandy loam
With a 4" diameter PVC pipe 30" in length
Presoaked hole for 1 hour, refilling pipe after water level dropped 6–12"

Rate: 1.5 minutes for 6" drop

PT#2
Tested from 5–7'in the reddish brown sandy loam
With a 4" diameter PVC pipe 30" in length
Presoaked hole for 1 hour, refilling pipe after water level dropped 6–12"

Rate: 1.0 minutes for 6" drop

## ZONING REQUIREMENTS:

| | |
|---|---|
| ZONE: | T–5(NEIGHBORHOOD CENTER) |
| BUILD TO DISTANCE FROM FRONT LOT LINE: | 0–12 FT. |
| SIDE SETBACK: | 0 FT. MIN. |
| REAR SETBACK: | 0 FT. MIN. |
| BUILDING HEIGHT: | 2 STORY MIN., 50 FT. MAX. |
| MIN. BUILD OUT ALONG FRONTAGE: | 70% |

APPLICANT:
AB ACQUISITIONS, LLC
298 TROY SCHENECTADY RD.
LATHAM, N.Y. 12110

OWNER:
WEST AVENUE DEVELOPMENT ASSOCIATES, LLC
120 WEST AVENUE, SUITE 201
SARATOGA SPRINGS, N.Y. 12866

CITY OF SARATOGA SPRINGS

Dig Safely. New York
Call 811
before you dig

| NO. | REVISION | BY | APPD. | DATE |
|---|---|---|---|---|
| A | ISSUED FOR SKETCH PLAN REVIEW | R.D.D. | N.C. | 4-25-16 |
| B | ISSUED FOR SITE PLAN REVIEW | R.D.D. | N.C. | 9-9-16 |

© COPYRIGHT 2015
ADVANCE ENGINEERING & SURVEYING, PLLC
ALL RIGHTS RESERVED.
UNAUTHORIZED REPRODUCTION IS A VIOLATION OF APPLICABLE LAWS.

It is a violation of the Education Law of the State of New York for any person, unless acting under the direction of a licensed professional engineer, to alter this document in any way.

9-9-16
NICHOLAS COSTA, P.E.

Design of:
ADVANCE ENGINEERING & SURVEYING, PLLC
CONSULTING IN -
CIVIL & ENVIRONMENTAL ENGINEERING
LAND SURVEYING & DEVELOPMENT
COMMERCIAL AND RESIDENTIAL
11 HERBERT DRIVE, LATHAM, N.Y. 12110
PHONE: (518) 698-3772
E-MAIL: ncostapes@gmail.com

EXISTING CONDITIONS & REMOVALS
MIXED USE DEVELOPMENT

WEST AVENUE CITY OF SARATOGA SPRINGS
COUNTY OF SARATOGA NEW YORK

DATE: SEPTEMBER, 2016
SCALE: 1" = 20'
SHEET 2 OF 9

SHEET NO.
EXIST
2 OF 10 16046–SITE

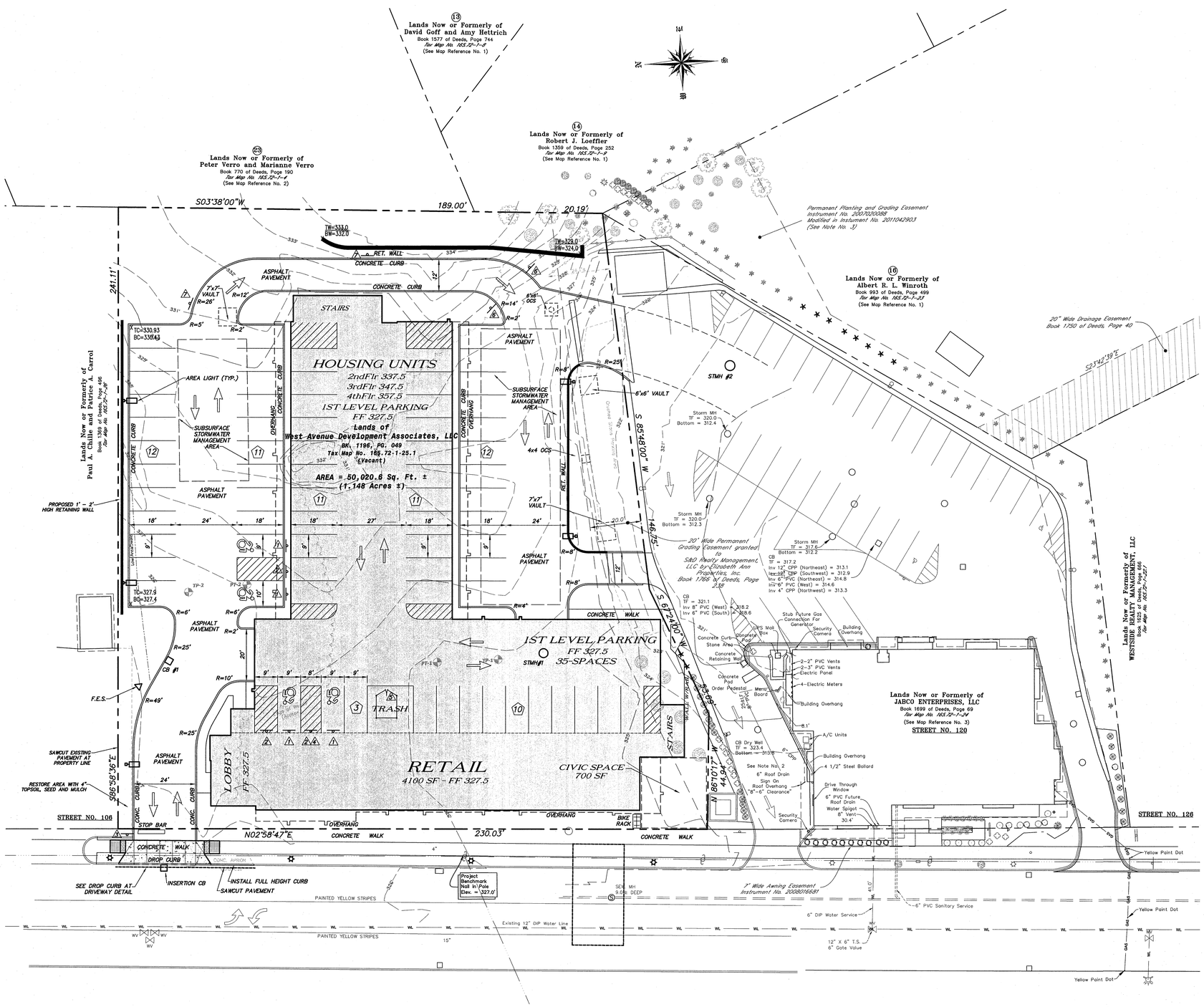


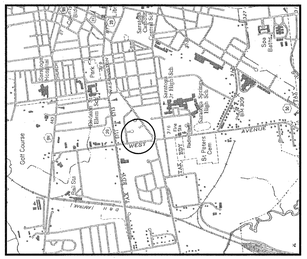

SITE LOCATION MAP
1" = 2000'±

## PARKING REQUIREMENTS:

RETAIL REQUIREMENT

1 SPACE PER 300 SF OF FLOOR AREA
4100 SF FLOOR AREA = 14 SPACES REQUIRED

HOUSING REQUIREMENTS:

1.5 SPACES / UNIT
36 UNITS = 54 SPACES REQUIRED

PARKING PROVIDED:
70 SPACES (INCLUDES 4 HANDICAP)

## SITE DEVELOPMENT DATA

| | EXISTING |
|---|---|
| LOT AREA | 50,020 SF = 1.15 ACRES |
| | PROPOSED TOTAL IMPERVIOUS AREAS |
| BUILDING ROOF AREA | 23,990 SF |
| ASPHALT PAVEMENT & CONCRETE SURFACES | 17,545 SF |
| TOTAL IMPERVIOUS | 41,535 SF |
| PERCENT IMPERVIOUS | 83% |

## SITE SETBACKS

| | REQUIRED FOR T-5 ZONE | PROPOSED |
|---|---|---|
| FRONT | 0-12 FT. | 0.4 FT. |
| NORTH SIDE | 0 FT. MIN. | 31.9 FT. |
| SOUTH SIDE | 0 FT. MIN. | 1.2 FT. |
| REAR | 0 FT. MIN. | 30.9 FT. |

APPLICANT:
AB ACQUISITIONS, LLC
298 TROY SCHENECTADY RD.
LATHAM, N.Y. 12110

OWNER:
WEST AVENUE DEVELOPMENT ASSOCIATES, LLC
120 WEST AVENUE, SUITE 201
SARATOGA SPRINGS, N.Y. 12866

Dig Safely. New York
Call 811 before you dig

CITY OF SARATOGA SPRINGS

| NO. | REVISION | BY | APPD. | DATE |
|---|---|---|---|---|
| A | ISSUED FOR SKETCH PLAN REVIEW | R.D.D. | N.C. | 4-25-16 |
| B | ISSUED FOR SITE PLAN REVIEW | R.D.D. | N.C. | 9-9-16 |

© COPYRIGHT 2016 ADVANCE ENGINEERING & SURVEYING, PLLC ALL RIGHTS RESERVED. UNAUTHORIZED REPRODUCTION IS A VIOLATION OF APPLICABLE LAWS.

I, as a violation of the Education Law of the State of New York, only one copy of this document is to be altered by an licensed engineer, in any way.

Design of:
ADVANCE ENGINEERING & SURVEYING, PLLC
CONSULTING IN -
CIVIL & ENVIRONMENTAL ENGINEERING
LAND SURVEYING & DEVELOPMENT
COMMERCIAL AND RESIDENTIAL
11 HERBERT DRIVE, LATHAM, N.Y. 12110
PHONE: (518) 698-3772 E-MAIL: ncostaps@gmail.com
NICHOLAS COSTA, P.E.

# SITE PLAN
## MIXED USE DEVELOPMENT

WEST AVENUE CITY OF SARATOGA SPRINGS
COUNTY OF SARATOGA NEW YORK

SCALE: 1" = 20'
DATE: SEPTEMBER, 2016
SHEET 3 OF 9

SHEET NO.
SITE
3 OF 10 16046-SITE

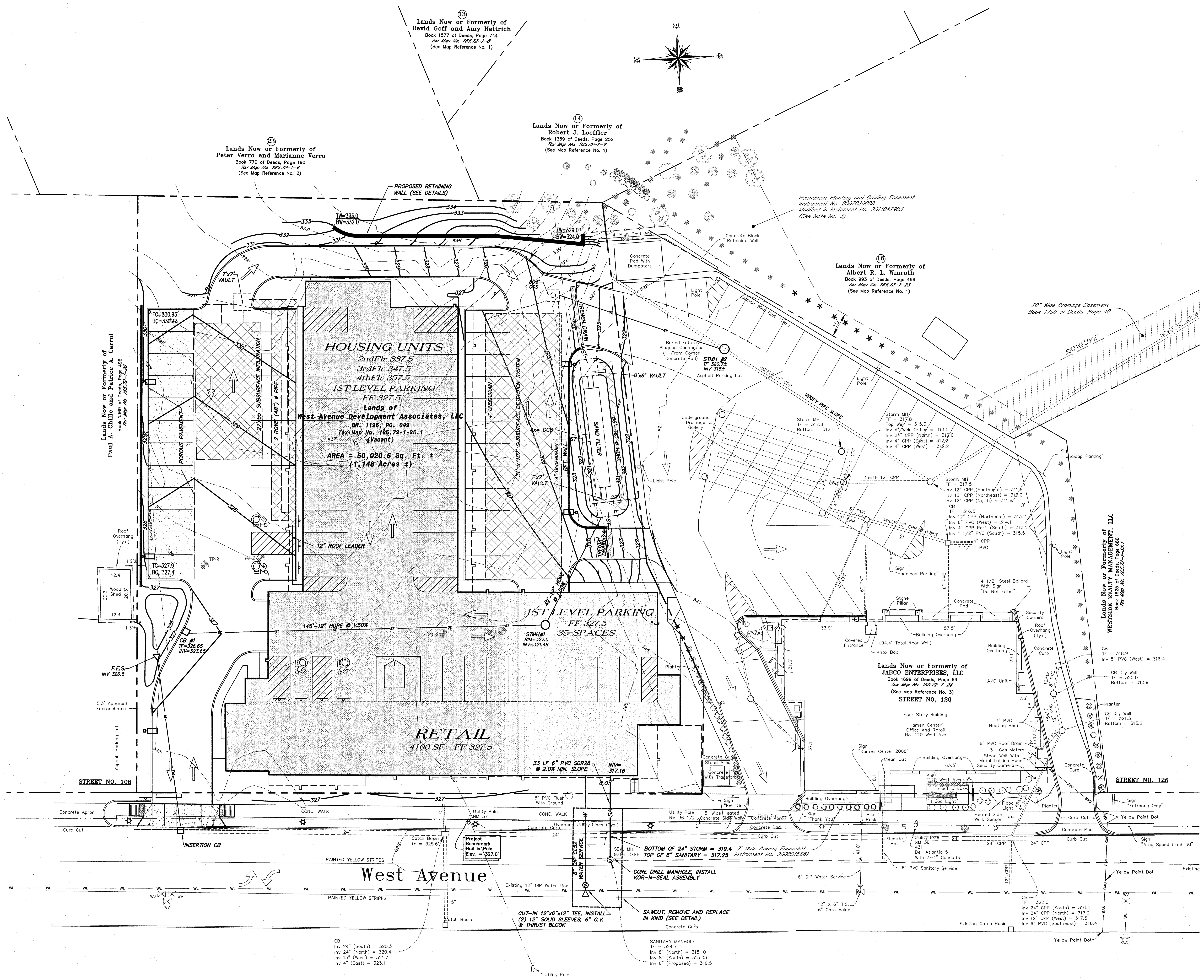


## GRADING & EROSION NOTES:

1. AREAS TO BE FILLED WILL BE CLEARED & GRUBBED. TOPSOIL WILL BE STOCKPILED FOR RE-USE.
2. FILL WILL BE PLACED IN LAYERS NOT TO EXCEED 9" & COMPACTED BY MEANS OF A MECHANICAL COMPACTOR BETWEEN LIFTS.
3. FROZEN MATERIALS OR SOFT, HIGHLY COMPRESSIBLE MATERIALS WILL NOT BE USED AS FILL.
4. FILL WILL NOT BE PLACED ON FROZEN SURFACE.
5. FILLING WILL BE COMPLETED AS A CONTINUOUS OPERATION.
6. AS SOON AS FINAL GRADES ARE ACHIEVED, THE AREAS WILL BE STABILIZED.
7. SEED & MULCH ALL DISTURBED AREAS IMMEDIATELY AFTER CONSTRUCTION.
8. CONTRACTOR MUST PROTECT ALL SURFACE WATER FROM SILTATION DURING CONSTRUCTION WITH APPROPRIATE MEASURES, INCLUDING BUT NOT LIMITED TO PLACING SILTATION FENCING AROUND THE WORK AREA.
9. ANY SOILS TRACKED OUT ONTO PUBLIC ROADS WILL BE SWEPT UP IMMEDIATELY.
10. A CONCRETE WASHOUT AREA MUST BE DUG BEFORE ANY POURING IS TO TAKE PLACE.
11. ANY PUMPING THAT IS TO BE DONE ON SITE MUST BE RUN THROUGH A FILTER AND/OR STONE.
12. A FINAL GRADING INSPECTION WILL HAVE TO BE CONDUCTED BEFORE COMPLETION OF CONSTRUCTION OR 12. CERTIFICATE OF OCCUPANCY IS ISSUED.
13. ANY AND ALL EXPOSED SOILS MUST BE STABILIZED BEFORE COMPLETION OF CONSTRUCTION OR CERTIFICATE OF OCCUPANCY IS ISSUED.
14. ALL LAWN AREAS SHALL BE PLANTED BY HYDROSEEDING METHODS AND IF IT IS COMPLETED DURING THE WINTER IT SHALL BE PROTECTED WITH EROSION BLANKETS.
15. STABILIZED CONSTRUCTION ENTRANCE SHALL BE INSTALLED PRIOR TO ISSUANCE OF A BUILDING PERMIT.

## SURVEY NOTES:

*1. BASE MAPPING INFORMATION SHOWN HEREON WAS PERFORMED BY VAN DUSEN & STEVES LAND SURVEYORS AND DOES NOT CONSTITUTE A SURVEY CONDUCTED BY ADVANCE ENGINEERING & SURVEYING, PLLC.*

*2. TAX MAP DESIGNATION: 165.72 – 1 – 25.1.*

## SITE SOILS DATA:

*Test Pits dug on 8/9/16*

*TP#1*
*0–8" topsoil*
*8–24" Brown fine sandy loam*
*24–42" cinders, brick, conc block, etc.*
*42–76" Reddish brown sandy loam, bottom layer wet*
*76–84" grey clay*
*76" groundwater*

*TP#2*
*0–16" Dark brown sandy loam topsoil*
*16–48" Light brown fine sandy loam*
*48–84" Reddish brown fine sandy loam*
*84–96" Reddish brown fine sandy loam, wet*
*96" Gray clay (wet)*

*PT#1*
*Tested from 4–6'in the reddish brown sandy loam*
*With a 4" diameter PVC pipe 30" in length*
*Presoaked hole for 1 hour, refilling pipe after water level dropped 6–12"*

*Rate: 1.5 minutes for 6" drop*

*PT#2*
*Tested from 5–7'in the reddish brown sandy loam*
*With a 4" diameter PVC pipe 30" in length*
*Presoaked hole for 1 hour, refilling pipe after water level dropped 6–12"*

*Rate: 1.0 minutes for 6" drop*

## APPLICANT:

AB ACQUISITIONS, LLC
298 TROY SCHENECTADY RD.
LATHAM, N.Y. 12110

## OWNER:

WEST AVENUE DEVELOPMENT ASSOCIATES, LLC
120 WEST AVENUE, SUITE 201
SARATOGA SPRINGS, N.Y. 12866

Dig Safely. New York
Call 811 before you dig

CITY OF SARATOGA SPRINGS

| NO. | REVISION | BY | APPD. | DATE |
|---|---|---|---|---|
| A | ISSUED FOR SKETCH PLAN REVIEW | R.D.D. | N.C. | 4-25-16 |
| B | ISSUED FOR SITE PLAN REVIEW | R.D.D. | N.C. | 9-9-16 |

© COPYRIGHT 2016 ADVANCE ENGINEERING & SURVEYING, PLLC ALL RIGHTS RESERVED. UNAUTHORIZED DUPLICATION IS A VIOLATION OF APPLICABLE LAWS.

It is a violation of the Education Law of the State of New York, for any person, unless he is acting under the direction of a Licensed Professional Engineer, to alter this document in any way.

NICHOLAS COSTA, P.E.

Design of:
ADVANCE ENGINEERING & SURVEYING, PLLC
CONSULTING IN -
CIVIL & ENVIRONMENTAL ENGINEERING
LAND SURVEYING & DEVELOPMENT
COMMERCIAL AND RESIDENTIAL
11 HERBERT DRIVE, LATHAM, N.Y. 12110
PHONE: (518) 698-3772 E-MAIL: ncostape@gmail.com

GRADING & UTILITY PLAN
MIXED USE DEVELOPMENT

WEST AVENUE CITY OF SARATOGA SPRINGS
COUNTY OF SARATOGA NEW YORK

DATE: SEPTEMBER, 2016 SCALE: 1" = 20' SHEET 4 OF 9

SHEET NO.
GRD
4 OF 10 16046-SITE

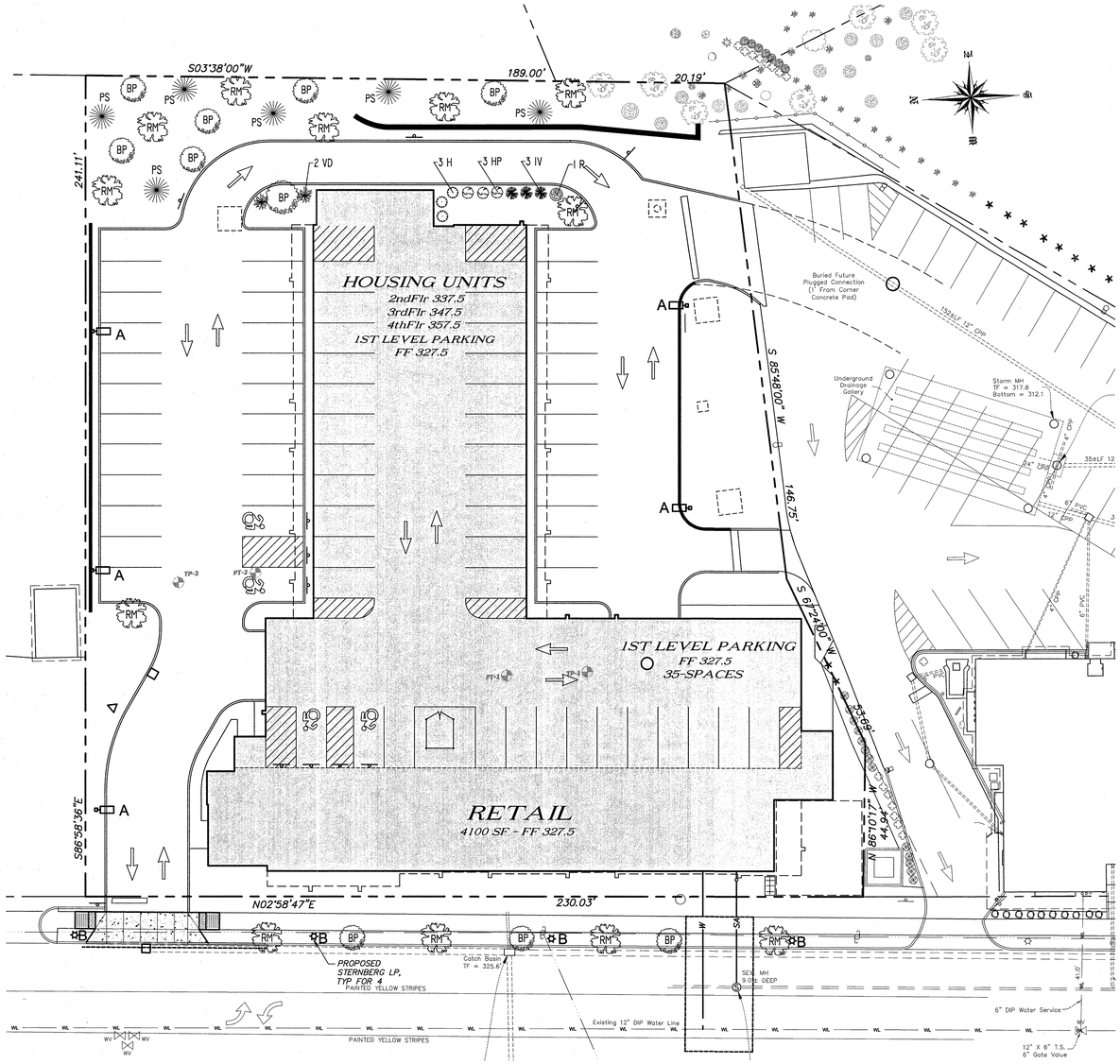


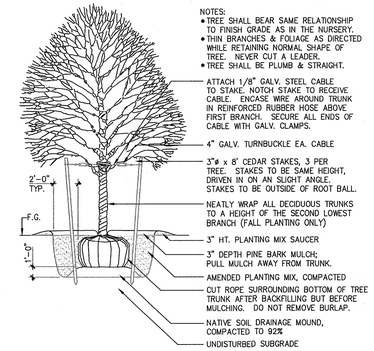


## DECIDUOUS TREE PLANTING

*NO SCALE*

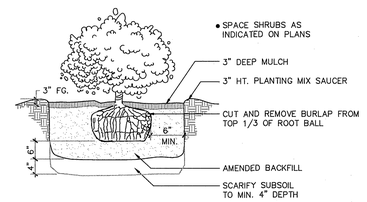


## SHRUB PLANTING DETAIL

*NO SCALE*

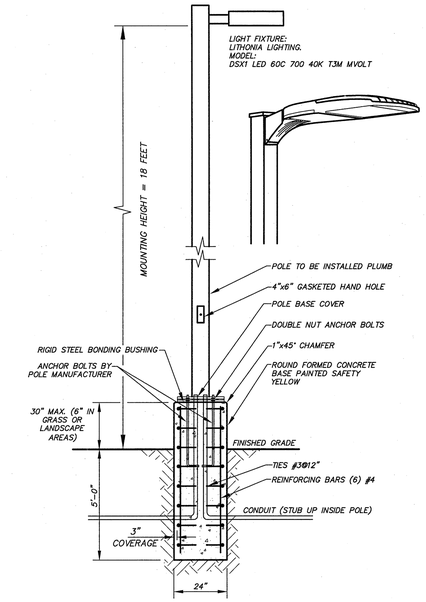


### NOTES:

1. CONDUITS AND GROUNDING SHALL BE AS REQUIRED BY THE ELECTRICAL DESIGN.
2. ALL CONCRETE SHALL BE 3000 PSI @ 28 DAYS.
3. DESIGNED FOR 90 MPH WIND WITH FIXTURE OF 13 SF.
4. FOUNDATION DIAMETER AND REINFORCING CIRCLE SHALL BE COORDINATED WITH ANCHOR BOLT LIMITS.
5. FOUNDATIONS SHALL BEAR ON UNDISTURBED NATURAL SOIL OR COMPACTED CRUSHED STONE.
6. ALL EXCAVATIONS SHALL BE BACKFILLED WITH STRUCTURAL FILL AND COMPACTED TO 95% OR MAXIMUM MATERIAL DENSITY.
7. EXPOSED AREAS OF CONCRETE AND ONE FOOT MIN. BELOW FINISHED GRADE SHALL BE FORMED.

## LIGHT FIXTURE AND POLE BASE DETAIL - A (ON-SITE)

*NO SCALE*

## SITE PLANTING SCHEDULE

| PLANT (COMMON) | PLANT (BOTANICAL) | SYMBOL | SIZE | QUANTITY | SPACING |
|---|---|---|---|---|---|
| BRADFORD PEAR | PYRUS CALLERYANA | BP | 2 1/2" CAL. – 6'–8' | 10 | AS SHOWN |
| RED MAPLE | ACER RUBRUM "KARPICK" | RM | 2 1/2" CAL. – 6'–8' | 12 | AS SHOWN |
| WHITE SPRUCE | PICEA GLAUCA | PS | 5' – 6' HEIGHT | 6 | AS SHOWN |
| ENDLESS SUM. HYD. | HYDRANGEA MACROPHYLLA | H | CONT. #5 | 3 | AS SHOWN |
| PEE GEE. HYDRANGEA | HYDRANGEA PANICULATA | HP | CONT. #5 | 3 | AS SHOWN |
| SWEETSPIRE L. HENRY | ITEA VIRGINICA | IV | CONT. #3 | 3 | AS SHOWN |
| OLGA RHODODENDRON | RHODODENDRON SMALL LEAF | R | CONT. 24–30" | 1 | AS SHOWN |
| VIB. "BLUE MUFFIN" | VIBURNUM DENTATUM | VD | CONT. #7 | 2 | AS SHOWN |

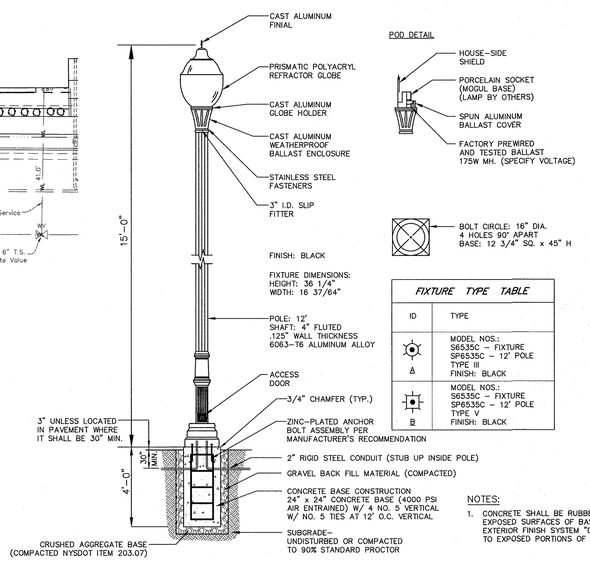


| FIXTURE TYPE TABLE | |
|---|---|
| ID | TYPE |
| A | MODEL NOS.: S6535C – FIXTURE SP6535C – 12' POLE TYPE III FINISH: BLACK |
| B | MODEL NOS.: S6535C – FIXTURE SP6535C – 12' POLE TYPE V FINISH: BLACK |

NOTES:

1. CONCRETE SHALL BE RUBBED SMOOTH ON ALL EXPOSED SURFACES OF BASE. APPLY STO EXTERIOR FINISH SYSTEM "DECO COAT–X" TO EXPOSED PORTIONS OF CONCRETE.

## LIGHT FIXTURE AND POLE BASE DETAIL - B (WITHIN R.O.W)

*NO SCALE*

APPLICANT:

AB ACQUISITIONS, LLC
298 TROY SCHENECTADY RD.
LATHAM, N.Y. 12110

OWNER:

WEST AVENUE DEVELOPMENT ASSOCIATES, LLC
120 WEST AVENUE, SUITE 201
SARATOGA SPRINGS, N.Y. 12866

CITY OF SARATOGA SPRINGS

Luminaire Schedule

| Symbol | Label | Quantity | Manufacturer | Catalog Number | Description | Filename | Lumens Per Lamp | Light Loss Factor | Wattage |
|---|---|---|---|---|---|---|---|---|---|
| | A | X | Lithonia Lighting | DSX1 LED 40C 700 40K T3M MVOLT W/ HOUSE SIDE SHIELD | DSX1 LED WITH (2) 20 LED LIGHT ENGINES, TYPE T3M OPTIC, 4000K, @ 700 mA | DSX1_LED_40C_700_40K_T3M_MVOLT.IES | 8920.182 | 0.9 | 178 |

Dig Safely. New York
Call 811
before you dig

| NO. | REVISION | BY | APPD. | DATE |
|---|---|---|---|---|
| A | ISSUED FOR SKETCH PLAN REVIEW | R.D.D. | N.C. | 4-25-16 |
| B | ISSUED FOR SITE PLAN REVIEW | R.D.D. | N.C. | 9-9-16 |

© COPYRIGHT 2016
ADVANCE ENGINEERING & SURVEYING, PLLC
ALL RIGHTS RESERVED. ALL DRAWINGS AND DESIGNS ARE A VIOLATION OF APPLICABLE LAWS.

It is a violation of the Education Law of the State of New York for any person, unless he is acting under the direction of a licensed Professional Engineer, to alter this document in any way.

Design of:
ADVANCE ENGINEERING & SURVEYING, PLLC
CONSULTING IN -
CIVIL & ENVIRONMENTAL ENGINEERING
LAND SURVEYING & DEVELOPMENT
COMMERCIAL AND RESIDENTIAL
11 HERBERT DRIVE, LATHAM, N.Y. 12110
PHONE: (518) 698-3772
E-MAIL: ncostape@gmail.com
NICHOLAS COSTA, P.E.

LANDSCAPE & LIGHTING PLAN
MIXED USE DEVELOPMENT

WEST AVENUE CITY OF SARATOGA SPRINGS
COUNTY OF SARATOGA NEW YORK

SCALE: 1" = 20'
SHEET 5 OF 9
DATE: SEPTEMBER, 2016

SHEET NO.
LNDSC
5 OF 10 16046–SITE

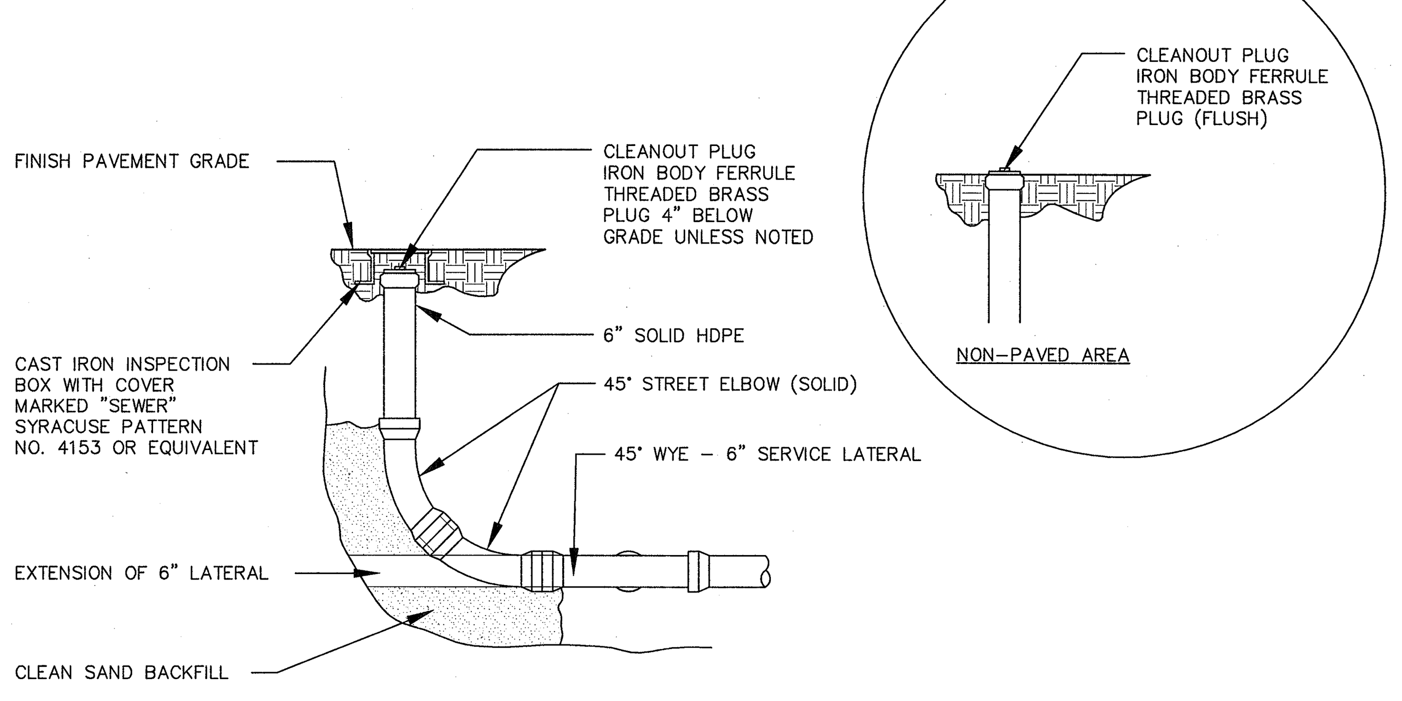


## SANITARY CLEAN OUT DETAIL

N.T.S.

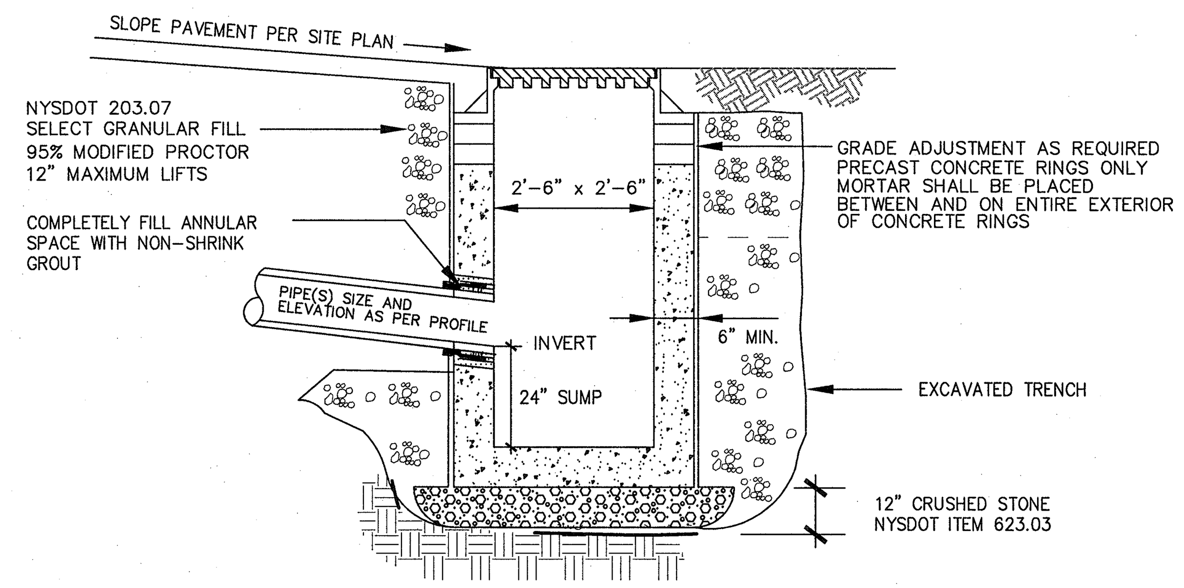


## CATCH BASIN DETAIL

N.T.S.

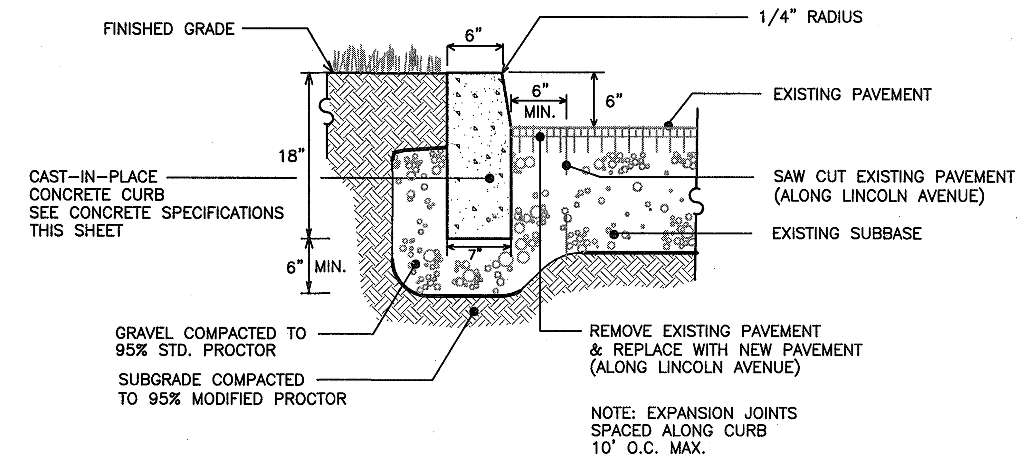


## TYPE 1 CURB – CAST–IN–PLACE CONCRETE

N.T.S.

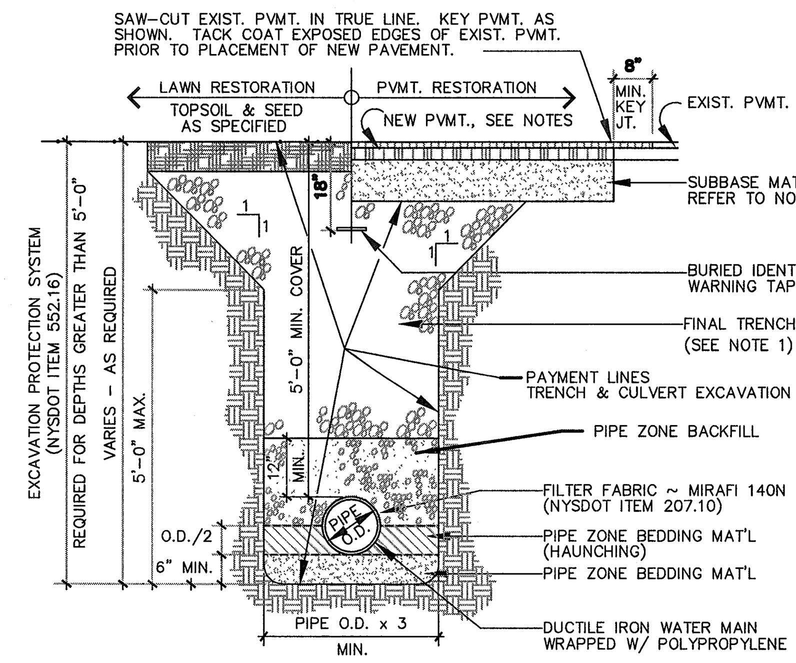


| ITEM | DEPTH | MATERIAL | NYSDOT ITEM NO. OR MAT'L DESIG. | METHOD OF PLACEMENT |
|---|---|---|---|---|
| PIPE ZONE BEDDING (ENCOUNTERED DRY COND.) | 6" MIN. | CRUSHED STONE | 203.07 | MECHANICAL COMPACTION |
| PIPE ZONE BEDDING (ENCOUNTERED WET COND.) | 6" MIN. | CRUSHED STONE | 623.03 | MECHANICAL COMPACTION |
| PIPE ZONE BEDDING (HAUNCHING) | PIPE O.D./2 | CRUSHED STONE | 203.07 | MECHANICAL COMPACTION |
| PIPE ZONE BACKFILL | 12" MIN. COVER | SELECT BORROW | 203.05 | MECHANICAL COMPACTION |
| FINAL TRENCH BACKFILL | VARIES | SEE NOTE 1 | SEE NOTE 1 | MECHANICAL COMPACTION |
| TRENCH & CULVERT EXCAVATION | VARIES | N/A | 206.04 | N/A |

NOTES:
1) FINAL TRENCH BACKFILL
a) IN NON–PAVED AREAS, FINAL TRENCH BACKFILL SHALL BE EXCAVATED MATERIAL WHEN DETERMINED SUITABLE BY THE ENGINEER OF RECORD; OTHERWISE IT SHALL BE SELECT GRANULAR FILL (NYSDOT ITEM 203.07), MIN. MOD. PROCTOR DENSITY SHALL BE 85 PERCENT.
b) IN PAVED AREAS, FINAL TRENCH BACKFILL SHALL BE SELECT GRANULAR FILL (NYSDOT ITEM 203.07), MIN. MODIFIED PROCTOR DENSITY SHALL BE 95 PERCENT.
2) ALL PIPE ZONE BEDDING, PIPE ZONE BACKFILL, AND FINAL TRENCH BACKFILL SHALL BE PLACED IN 6 INCH MAX. COMPACTED LIFTS. ALL BEDDING AND BACKFILL MATERIALS SHALL BE MECHANICALLY COMPACTED TO THE SATISFACTION OF THE ENGINEER & PER THE REFERENCE NYSDOT SPECIFICATIONS.
3) EXCAVATION SHALL BE KEPT DRY AND DEWATERED AT ALL TIMES.
4) CONTRACTOR SHALL BE RESPONSIBLE FOR COMPACTION EQUIPMENT SELECTION AND OPERATION OPERATION TO ACHIEVE REQUIRED RESULTS.
5) RESTORE PAVEMENT IN KIND PER REGULATORY AGENCY REQUIREMENTS, AS APPLICABLE.
6) ALL DIP WATERMAINS AND DIP APPURTENANCES SHALL BE WRAPPED IN POLYPROPYLENE.

## TYPICAL TRENCH DETAIL

N.T.S.

NOTES:

EXPANSION JOINT SPACING – 20'–25' O.C.
CONTROL JOINT SPACING – 5' O.C. NOMINAL
CROSS SLOPE – 1/8" TO 1/4" PER FOOT (MAX. SLOPE 1:50 TYP.) TOWARDS STREET OR A.O.B.E.
MAX. SLOPE ALONG THE LENGTH OF THE WALK SHOULD NOT EXCEED 1:12

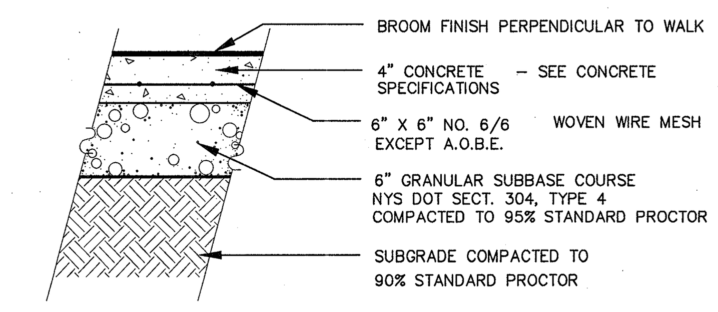


## TYPE 1 – CONCRETE WALK 5' WIDE

N.T.S.

NOTES:

EXPANSION JOINT SPACING – 20'–25' O.C.
CONTROL JOINT SPACING – 5' O.C. NOMINAL
CROSS SLOPE – 1/8" TO 1/4" PER FOOT (MAX. SLOPE 1:50 TYP.) TOWARDS STREET OR A.O.B.E.
MAX. SLOPE ALONG THE LENGTH OF THE WALK SHOULD NOT EXCEED 1:12

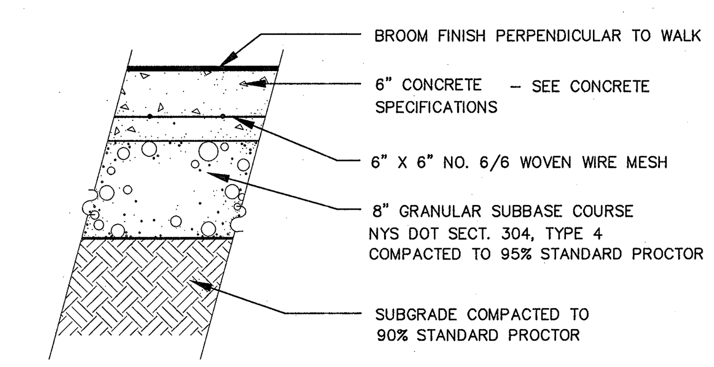


## TYPE 2 – CONCRETE WALK GREATER THAN 5' WIDE

N.T.S.

## CONCRETE WALK

### CITY OF SARATOGA SPRINGS CONCRETE SPECIFICATIONS

THESE GENERAL CONCRETE SPECIFICATIONS SHALL APPLY TO ALL CONCRETE WORK WITHIN THE CITY OF SARATOGA SPRINGS INSTALLED WITHIN A CITY RIGHT–OF–WAY AND/OR WITHIN THE APPROVAL AUTHORITY OF THE PLANNING BOARD.

ALL CONCRETE THAT MAY COME IN CONTACT WITH DEICING CHEMICALS SHALL MEET OR EXCEED THESE MINIMUM SPECIFICATIONS.

CONCRETE SHALL BE ONLY PORTLAND CEMENT CONCRETE AIR–ENTRAINED OF DURABLE MATERIALS AND SHALL HAVE (1) A LOW WATER–CEMENT RATIO (MAXIMUM 0.46), (2) A SLUMP OF 4 INCHES OR LESS,* (3) A CEMENT CONTENT OF 606 LB PER CUBIC YARD OR MORE, (4) PROPER FINISHING AFTER BLEED WATER HAS EVAPORATED FROM THE SURFACE, (5) ADEQUATE DRAINAGE WITH A SLOPE OF 1/8 INCH PER LINEAR FOOT OR MORE, (6) A MINIMUM OF 7 DAYS MOIST CURING AT OR ABOVE 50 DEGREES F, (7) A MINIMUM COMPRESSIVE STRENGTH OF 4000 PSI AT 28 DAYS, AND (8) A MINIMUM 30–DAY DRYING PERIOD AFTER MOIST CURING IF CONCRETE IS PLACED IN THE FALL AND WILL BE EXPOSED TO FREEZE–THAW CYCLES AND DEICERS WHEN SATURATED. THE EXACT LENGTH OF TIME FOR SUFFICIENT DRYING TO TAKE PLACE MAY VARY WITH CLIMATE AND WEATHER CONDITIONS.

TECHNICAL SPECIFICATIONS FOR CONCRETE AS HEREIN DEFINED SHALL COMPLY WITH THE APPLICABLE SPECIFICATIONS OF THE "NEW YORK STATE DEPARTMENT OF TRANSPORTATION STANDARD SPECIFICATIONS CONSTRUCTION AND MATERIALS", 1985.

ANY CLARIFICATION, REVISIONS, MODIFICATIONS THERETO SHALL ONLY BE MADE SUBJECT TO APPROVAL OF THE CITY OF SARATOGA SPRINGS PLANNING BOARD.

*A SUPER PLASTICIZER MAY BE USED TO INCREASE SLUMP AND WORKABILITY WITHOUT INCREASING THE WATER–CEMENT RATIO.

## CONCRETE SPECIFICATIONS

N.T.S.

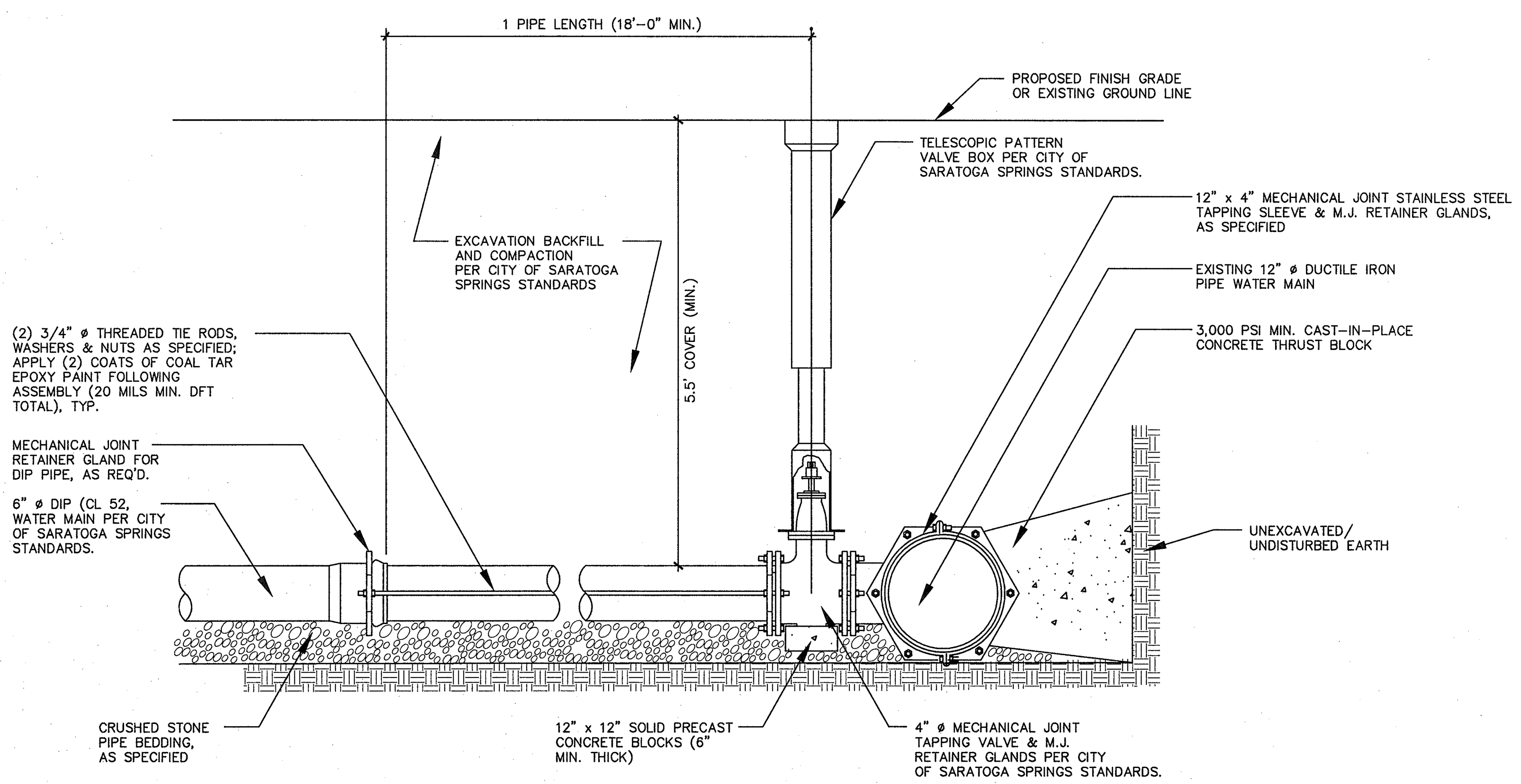


## CONNECTION TO EXISTING WATER MAIN DETAIL

N.T.S.

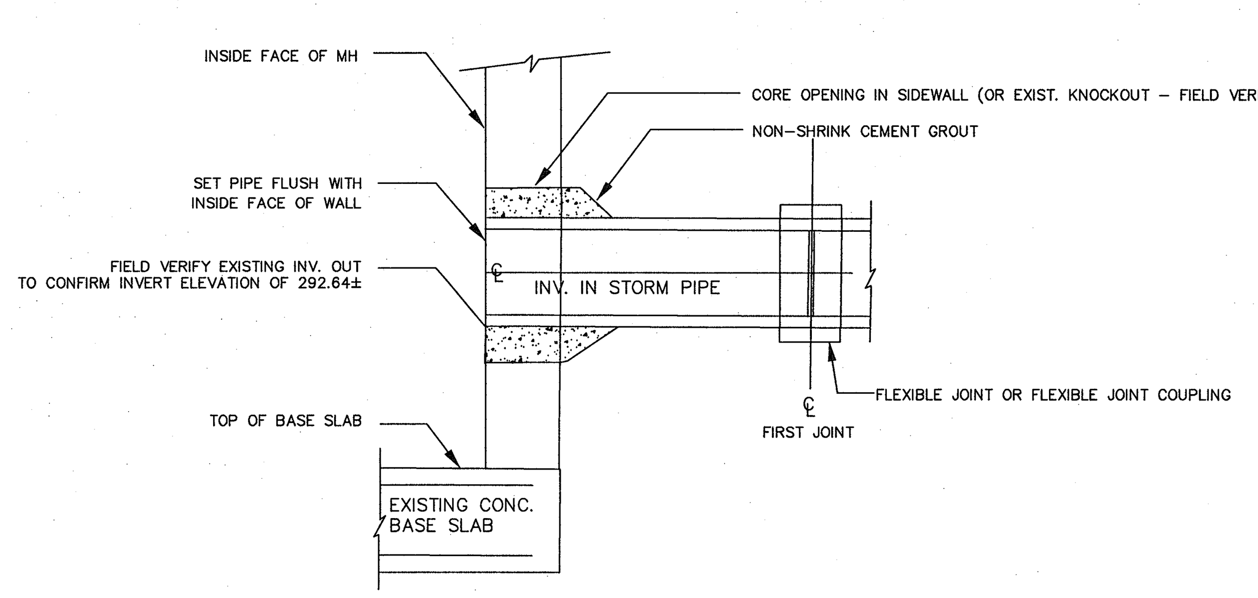


## PIPE CONNECTION TO EXISTING MANHOLE DETAIL

N.T.S.

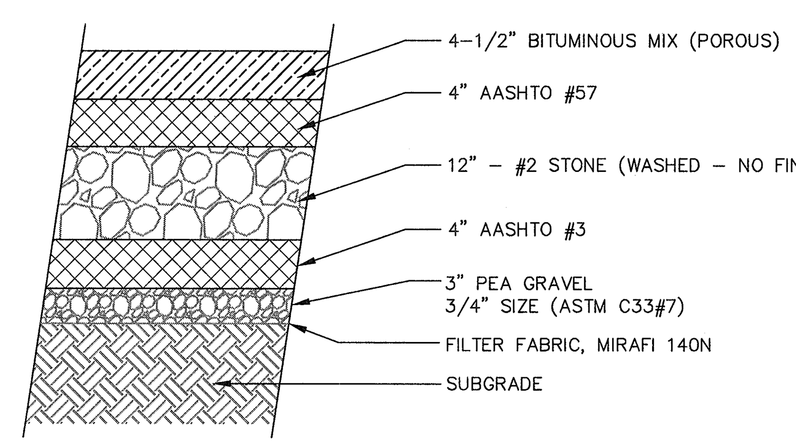


| MIXTURE REQUIREMENTS | | | |
|---|---|---|---|
| SCREEN SIZE | PERCENT PASSING AASHTO #3 | PERCENT PASSING ASTM C33SC SIZE #7 | PERCENT PASSING AASHTO #57 |
| | 100 | | 100 |
| 2" | 95–100 | | 100 |
| 1–1/2" | 35–70 | | 100 |
| 1" | 0–15 | 100 | 75–100 |
| 3/4" | – | 90–100 | – |
| 1/2" | 0–5 | 20–55 | 25–60 |
| 3/8" | <5 | 0–15 | 25 |
| #4 | <5 | 0–5 | 0–10 |
| #8 | <5 | 0 | 0–5 |

NOTES

1. ALL AGGREGATE PERCENTAGES ARE BASED ON THE TOTAL WEIGHT OF THE AGGREGATE. THE ASPHALT CONTENT IS BASED ON THE TOTAL WEIGHT OF THE MIX.
2. BINDER CONTENT 5.5%, BINDER GRADE PG–64–22P.

| TYPICAL MAINTENANCE REQUIREMENTS FOR POROUS PAVEMENT | |
|---|---|
| ACTIVITY | SCHEDULE |
| ENSURE THAT PAVED AREA IS CLEAN OF DEBRIS | MONTHLY |
| ENSURE THAT PAVED AREA DEWATERS BETWEEN STORMS | MONTHLY AND AFTER STORMS > 0.5" |
| ENSURE THAT THE AREA IS CLEAN OF SEDIMENTS | MONTHLY |
| MOW UPLAND AND ADJACENT AREA, AND SEED BARE AREAS | AS NEEDED |
| VACUUM SWEEP FREQUENTLY TO KEEP SURFACE FREE OF SEDIMENTS | TYPICALLY 3 TO 4 TIMES A YEAR |
| INSPECT THE SURFACE FOR DETERIORATION OR SPALLING | ANNUALLY |

CONSTRUCTION GUIDELINES (PER NYS STORMWATER MANAGEMENT DESIGN MANUAL – AUGUST 2010)

1. INSTALLATION PROCEDURES ARE VITAL TO THE SUCCESS OF PERVIOUS PAVEMENT PROJECTS, PARTICULARY PERVIOUS ASPHALT AND CONCRETE PAVEMENT MIXES. THE SUBGRADE CANNOT BE OVERLY COMPACTED WITH THE INCLUSION OF FINE PARTICULATES OR THE VOID RATIO CRITICAL TO PROVIDING STORAGE FOR LARGE STORM EVENTS WILL BE LOST. WEATHER CONDITIONS AT THE TIME OF INSTALLATION CAN AFFECT THE FINAL PRODUCT. EXTREMELY HIGH OR LOW TEMPERATURES SHOULD BE AVOIDED DURING CONSTRUCTION OF PERVIOUS ASPHALT AND CONCRETE PAVEMENTS.
2. AREAS FOR POROUS PAVEMENT SYSTEMS SHALL BE CLEARLY MARKED BEFORE ANY SITE WORK BEGINS TO AVOID SOIL DISTURBANCE AND COMPACTION DURING CONSTRUCTION.
3. PERVIOUS PAVEMENT AND OTHER INFILTRATION PRACTICES SHOULD BE INSTALLED TOWARD THE END OF THE CONSTRUCTION PERIOD. UPSTREAM CONSTRUCTION SHALL BE COMPLETED AND STABILIZED BEFORE CONNECTION TO ANY POROUS PAVEMENT SYSTEM. A DENSE AND VIGOROUS VEGETATIVE COVER SHALL BE ESTABLISHED OVER ANY CONTRIBUTING PERVIOUS DRAINAGE AREAS BEFORE RUNOFF CAN BE ACCEPTED INTO THE FACILITY.
4. SUBSURFACE ARE SHOULD BE EXCAVATED TO PROPOSED DEPTH. EXISTING SUBGRADE SHALL NOT BE COMPACTED OR SUBJECT TO EXCESSIVE CONSTRUCTION EQUIPMENT PRIOR TO PLACEMENT OF GEOTEXTILE AND STONE BED. WHERE EROSION OF SUBGRADE HAS CAUSED ACCUMULATION OF FINE MATERIALS AND/OR SURFACE PONDING, THIS MATERIAL SHALL BE REMOVED WITH LIGHT EQUIPMENT AND THE UNDERLYING SOILS SCARIFIED TO A MINIMUM DEPTH OF 6 INCHES WITH A YORK RAKE OR EQUIVALENT AND LIGHT TRACTOR.
5. THE BOTTOM OF THE INFILTRATION BED SHALL BE AT LEVEL GRADE.
6. PLACE GEOTEXTILE AND RECHARGE BED AGGREGATE IMMEDIATELY AFTER APPROVAL OF SUBGRADE PREPARATION TO PREVENT ACCUMULATION OF DEBRIS OR SEDIMENT. PREVENT RUNOFF AND SEDIMENT FROM ENTERING THE STORAGE BED DURING THE PLACEMENT OF THE GEOTEXTILE AND AGGREGATE BED.
7. PLACE GEOTEXTILE IN ACCORDANCE WITH MANUFACTURER'S STANDARDS AND RECOMMENDATIONS. ADJACENT STRIPS OF FILTER FABRIC SHALL OVERLAP A MINIMUM OF 16 INCHES. FABRIC SHALL BE SECURED AT LEAST 4 FEET OUTSIDE OF BED. THIS EDGE STRIP SHOULD REMAIN IN PLACE UNTIL ALL BARE SOILS CONTIGUOUS TO BEDS ARE STABILIZED AND VEGETATED.
8. AS THE SITE IS FULLY STABILIZED, EXCESS GEOTEXTILE CAN BE CUT BACK TO THE EDGE OF THE BED.

## POROUS ASPHALT PAVEMENT SECTION & NOTES

N.T.S.

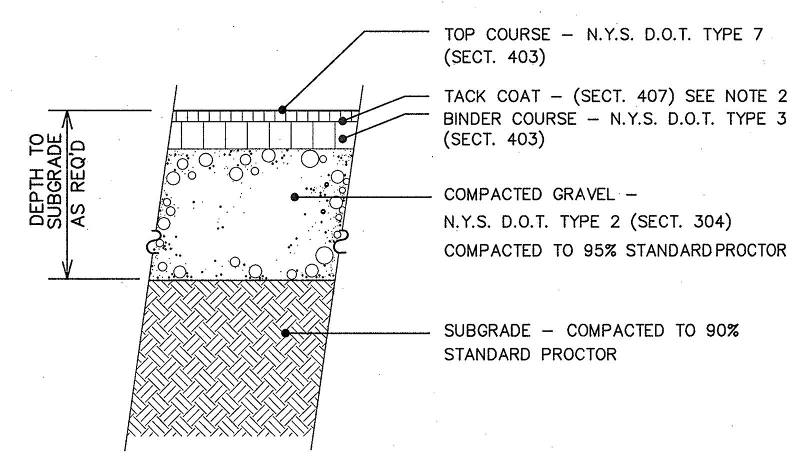


| PAVEMENT TYPE | TOP COURSE | BINDER COURSE | GRAVEL COURSE |
|---|---|---|---|
| PARKING LOT | 1" | 1 1/2" | 8–10" |
| STANDARD ROADWAY | 1"–1/2" | 3" | 12" |
| HEAVILY TRAVELED/ TRUCK LOADING | 2" | 4" | 12" |

NOTES:
1. PAVEMENT SECTIONS SPECIFIED ARE TYPICAL FOR STREET, DRIVEWAY AND PARKING LOT CONSTRUCTION WHERE TRAFFIC VOLUMES AND LOADING ARE NOT EXCESSIVE. BASED ON ANTICIPATED VOLUMES AND LOADS, THE CITY ENGINEER MAY REQUIRE STRUCTURAL PAVEMENT SECTION TO BE INCREASED TO CARRY DESIGN LOADING.
2. TACK COAT BINDER COURSE BEFORE PLACING TOP COURSE IF MORE THAN 48 HOURS HAVE ELAPSED AFTER PLACING THE BINDER COURSE.
3. THE CITY ENGINEER MAY REQUIRE COMPACTION TESTING AND/OR CORE SAMPLES TO VERIFY PAVEMENT THICKNESSES. ALL TESTING SHALL BE AS ORDERED BY THE CITY ENGINEER AND SHALL BE PAID FOR BY THE CONTRACTOR.
4. NOTIFY THE CITY ENGINEER 48 HOURS MINIMUM PRIOR TO COMMENCING PAVING OPERATIONS.

## ASPHALT PAVEMENT

CITY OF SARATOGA SPRINGS DETAIL DATED 1/13/2010

N.T.S.

APPLICANT:

AB ACQUISITIONS, LLC
298 TROY SCHENECTADY RD.
LATHAM, N.Y. 12110

OWNER:

WEST AVENUE DEVELOPMENT ASSOCIATES, LLC
120 WEST AVENUE, SUITE 201
SARATOGA SPRINGS, N.Y. 12866

Dig Safely. New York
Call 811
before you dig

CITY OF SARATOGA SPRINGS

| NO. | REVISION | BY | APPD. | DATE |
|---|---|---|---|---|
| A | ISSUED FOR SKETCH PLAN REVIEW | R.D.D. | N.C. | 4–25–16 |
| B | ISSUED FOR SITE PLAN REVIEW | R.D.D. | N.C. | 9–9–16 |

© COPYRIGHT 2016 ADVANCE ENGINEERING & SURVEYING, PLLC ALL RIGHTS RESERVED. UNAUTHORIZED DUPLICATION IS A VIOLATION OF APPLICABLE LAWS.

It is a violation of the Education Law of the State of New York, for any person, unless he is acting under the direction of a Licensed Professional Engineer, to alter this document in any way.

09.21.16
NICHOLAS COSTA, P.E.

Design of:
ADVANCE ENGINEERING & SURVEYING, PLLC
CONSULTING IN -
CIVIL & ENVIRONMENTAL ENGINEERING
LAND SURVEYING & DEVELOPMENT
COMMERCIAL AND RESIDENTIAL
11 HERBERT DRIVE, LATHAM, N.Y. 12110
PHONE: (518) 698–3772 E–MAIL: ncostape@gmail.com

CONSTRUCTION DETAILS - 1
MIXED USE DEVELOPMENT

WEST AVENUE CITY OF SARATOGA SPRINGS
COUNTY OF SARATOGA NEW YORK

DATE: SEPTEMBER, 2016 | SCALE: NONE | SHEET 6 OF 9

SHEET NO.
DET 1
6 OF 10 16046–SITE

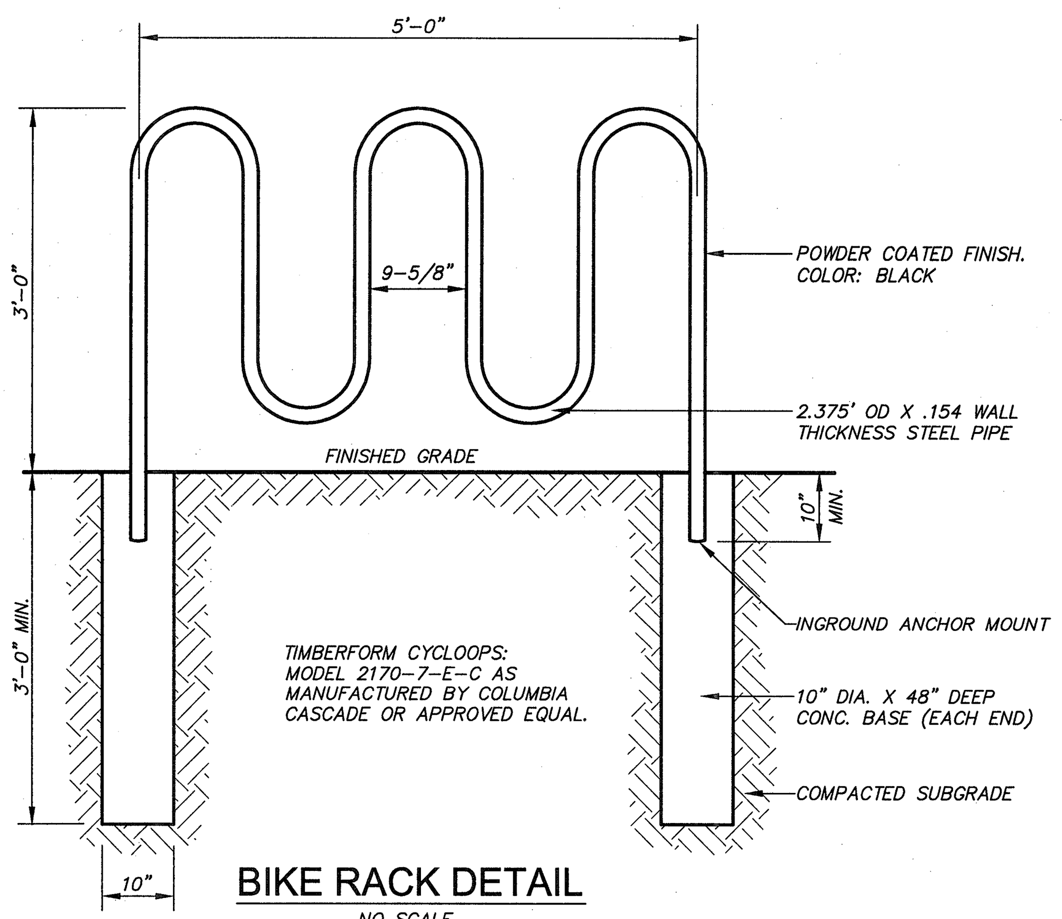


## BIKE RACK DETAIL

NO SCALE

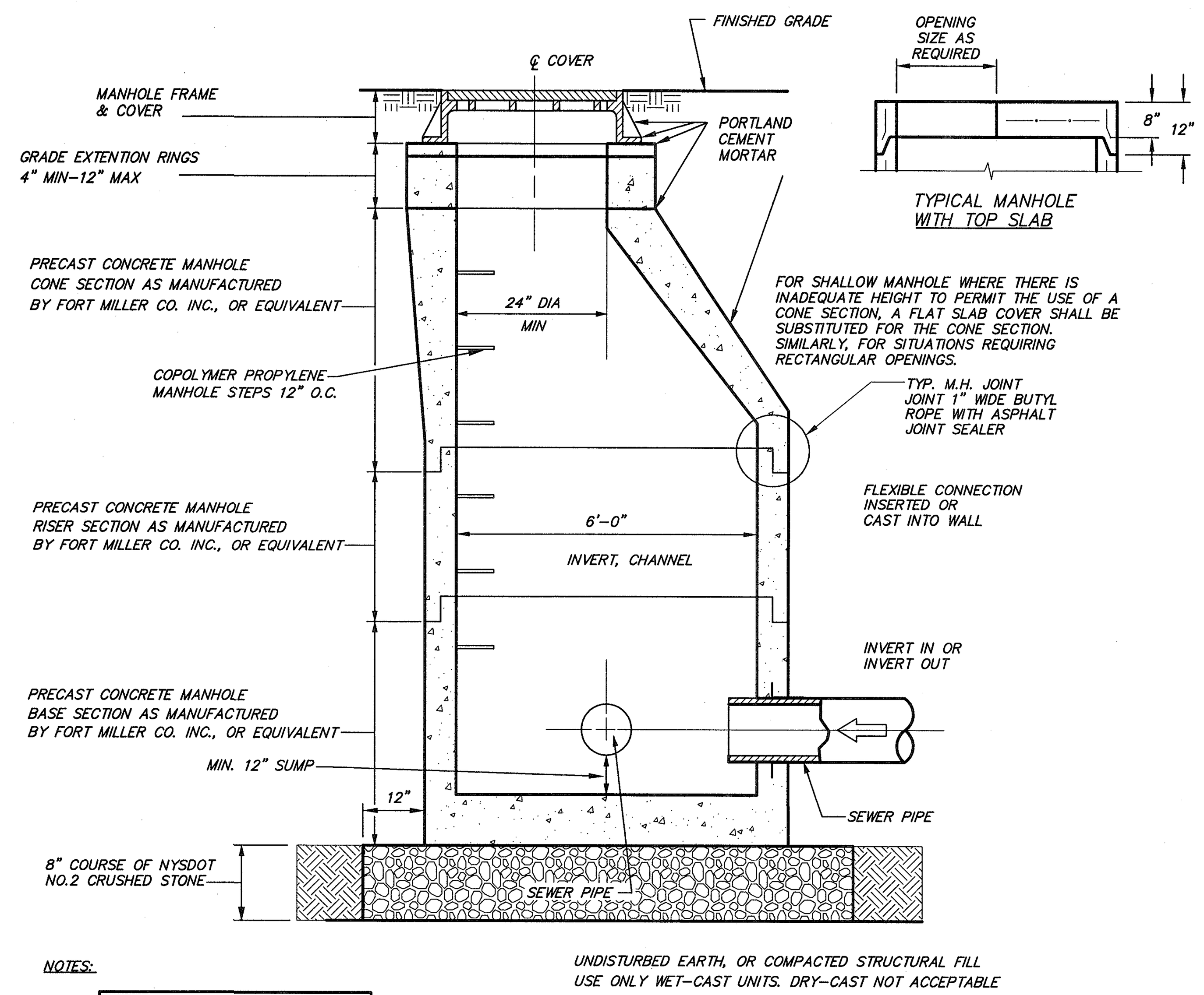


NOTES:

1.

| CONE DIMENSIONS | |
|---|---|
| DIAM. OPENING | HEIGHT |
| 24" | 24" OR 42" |
| 30" | 34" |

2. REINFORCEMENT FOR MANHOLE AND SLAB TOP SHALL BE DESIGNED BY A LICENSED NEW YORK STATE PROFESSIONAL ENGINEER PRIOR TO CONSTRUCTION. SHOP DRAWINGS SHALL BE SUBMITTED FOR REVIEW. STRUCTURE SHALL BE DESIGNED FOR HS20-44 VEHICULAR LOADING PLUS 25% IMPACT.
3. CONCRETE TO TEST 4000 P.S.I. AT 28 DAYS IN CONFORMANCE WITH A.S.T.M. C-478.
4. EACH MANHOLE EXTERIOR SHALL RECEIVE TWO BITUMINOUS COATS.

## PRECAST CONCRETE STORM MANHOLE

NO SCALE

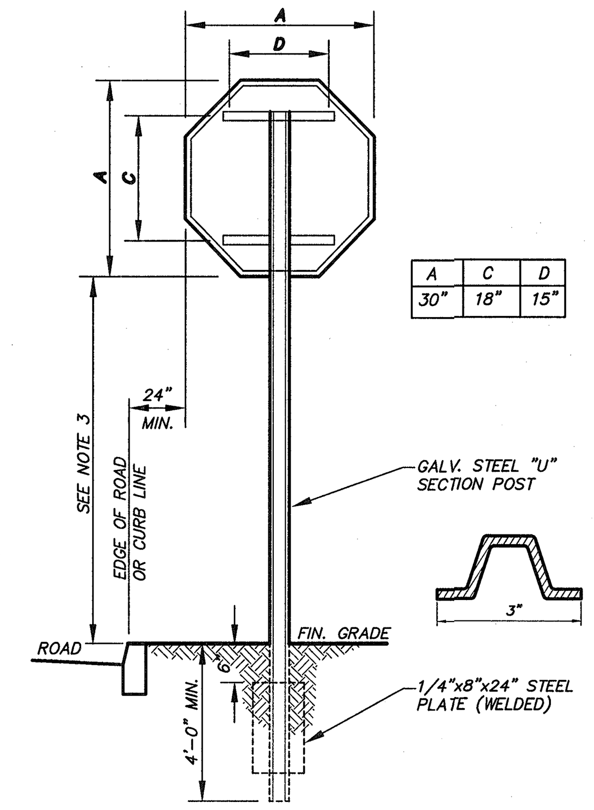


## SINGLE POST STOP SIGN MOUNTING DETAIL

NO SCALE

NOTES:

1. ALL SIGNS AND PAVEMENT MARKINGS SHALL CONFORM TO THE LATEST EDITION OF THE NYSDOT STANDARD SPECIFICATIONS-SECTION 645 AND 640 AND THE "NATIONAL MANUAL ON UNIFORM TRAFFIC CONTROL DEVICES" - 2009 EDITION AND THE "NYS SUPPLEMENT."
2. STRIPING WORK WILL BE REVIEWED AND ACCEPTED BY THE AUTHORITY HAVING JURISDICTION.
3. SIGN MOUNTING HEIGHT SHALL BE A MINIMUM OF 7 FT. MINIMUM HEIGHT MAY BE ADJUSTED ONLY IN ACCORDANCE WITH PROVISIONS OUTLINED IN THE "NATIONAL MANUAL ON UNIFORM TRAFFIC CONTROL DEVICES" - 2009 EDITION AND THE "NYS SUPPLEMENT."
4. SIGN POST SHALL BE IN ACCORDANCE WITH NYSDOT STANDARD SPECS-SECTION 730.

## ON-SITE SIGN SCHEDULE

| SIGN NO. | SIGN TEXT | SIGN SIZE | TEXT SIZE & COLOR | NO. REQ'D. | TYPE OF MOUNTING | MUTCD NO. |
|---|---|---|---|---|---|---|
| 1 | RESERVED PARKING | 12" x 18" | BACKGROUND WHITE/BLUE; LEGEND GREEN/WHITE | 4 | GROUND MOUNTED METAL POSTS | R7-8 |
| 2 | NO PARKING ANY TIME | 12" x 18" | BACKGROUND WHITE; LEGEND RED | 3 | GROUND MOUNTED METAL POSTS | R7-1 |
| 3 | STOP | 30" x 30" | BACKGROUND RED; LEGEND WHITE | 1 | GROUND MOUNTED METAL POSTS | R1-1 |
| 4 | VAN ACCESSIBLE | 12" x 6" | BACKGROUND WHITE; LEGEND BLUE | 1 | GROUND MOUNTED METAL POSTS | R7-8P |
| 5 | REFUSE PICK-UP HOURS 7AM-7PM | 12" x 18" | BACKGROUND WHITE; LEGEND BLACK | 2 | INSTALLED ON GATE | CUSTOM |
| 6 | DO NOT ENTER | 36"x36" | BACKGROUND WHITE; LEGEND RED | 2 | GROUND MOUNTED METAL POSTS | R5-1 |
| 7 | ONE WAY | 36"x12" | BACKGROUND BLACK; LEGEND WHITE | 4 | GROUND MOUNTED METAL POSTS | R6-1R |

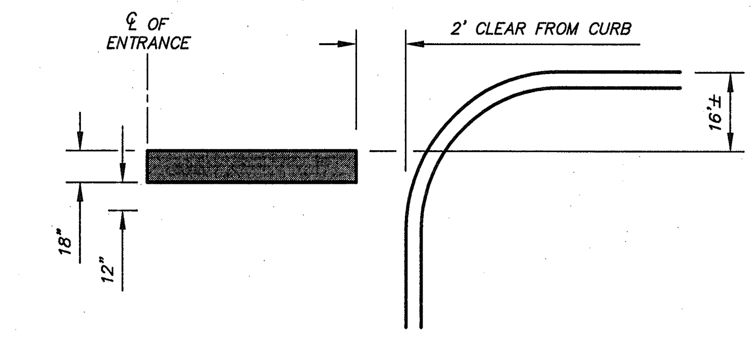


## STOP BAR PAVEMENT MARKING DETAIL

NO SCALE

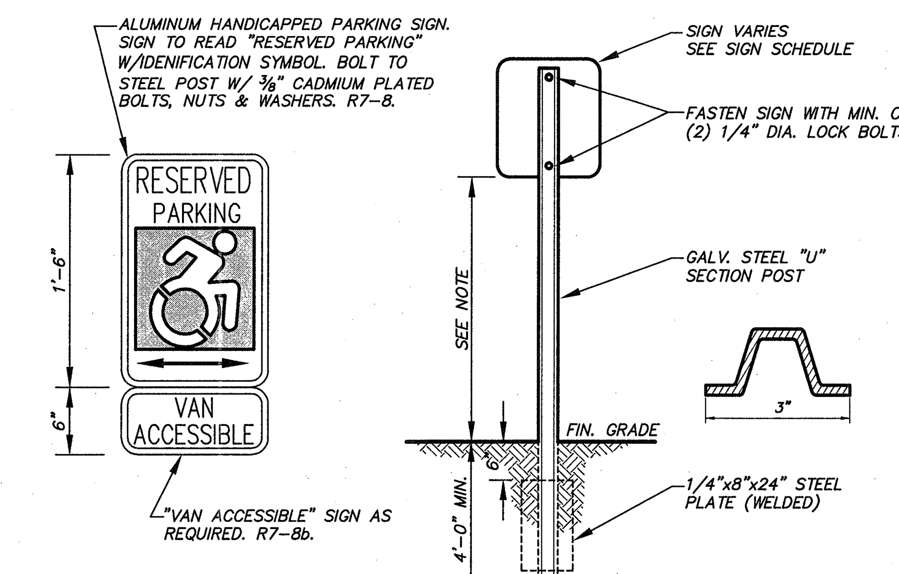


NOTE:

1. SIGN MOUNTING HEIGHT SHALL BE A MINIMUM OF 7 FT. MINIMUM HEIGHT MAY BE ADJUSTED ONLY IN ACCORDANCE WITH PROVISIONS OUTLINED IN THE "NATIONAL MANUAL ON UNIFORM TRAFFIC CONTROL DEVICES" - 2009 EDITION AND THE "NYS SUPPLEMENT."

## SINGLE POST SIGN MOUNTING DETAIL

NO SCALE

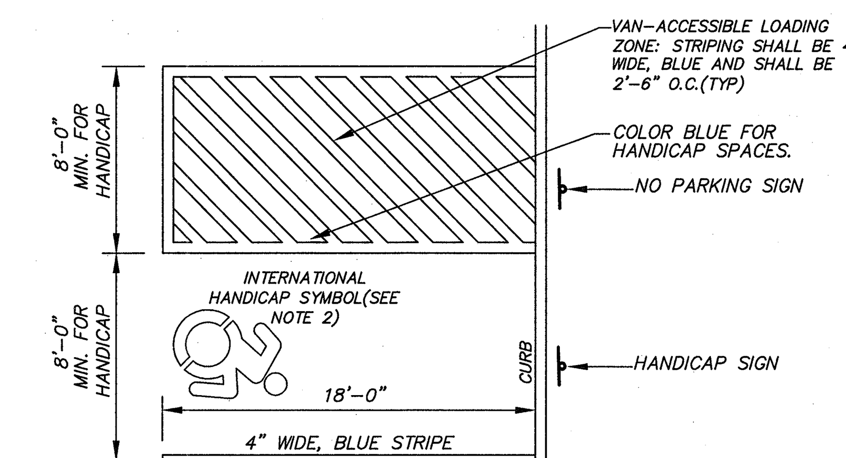


NOTES:

1. ALL DIMENSIONS SHALL BE IN ACCORDANCE WITH ADA STANDARDS AND CURRENT ZONING AND SITE REGULATIONS.
2. PAINTED HANDICAP SYMBOL TO BE IN ACCORDANCE W/ ADA STANDARDS.
3. SLOPE OF PAVEMENT SURFACE IN HANDICAP PARKING AREA SHALL NOT EXCEED 2% IN ANY DIRECTION.
4. SEE PLAN FOR ACTUAL LOCATION OF SIGNAGE.

## PAVEMENT MARKING DETAIL

NO SCALE

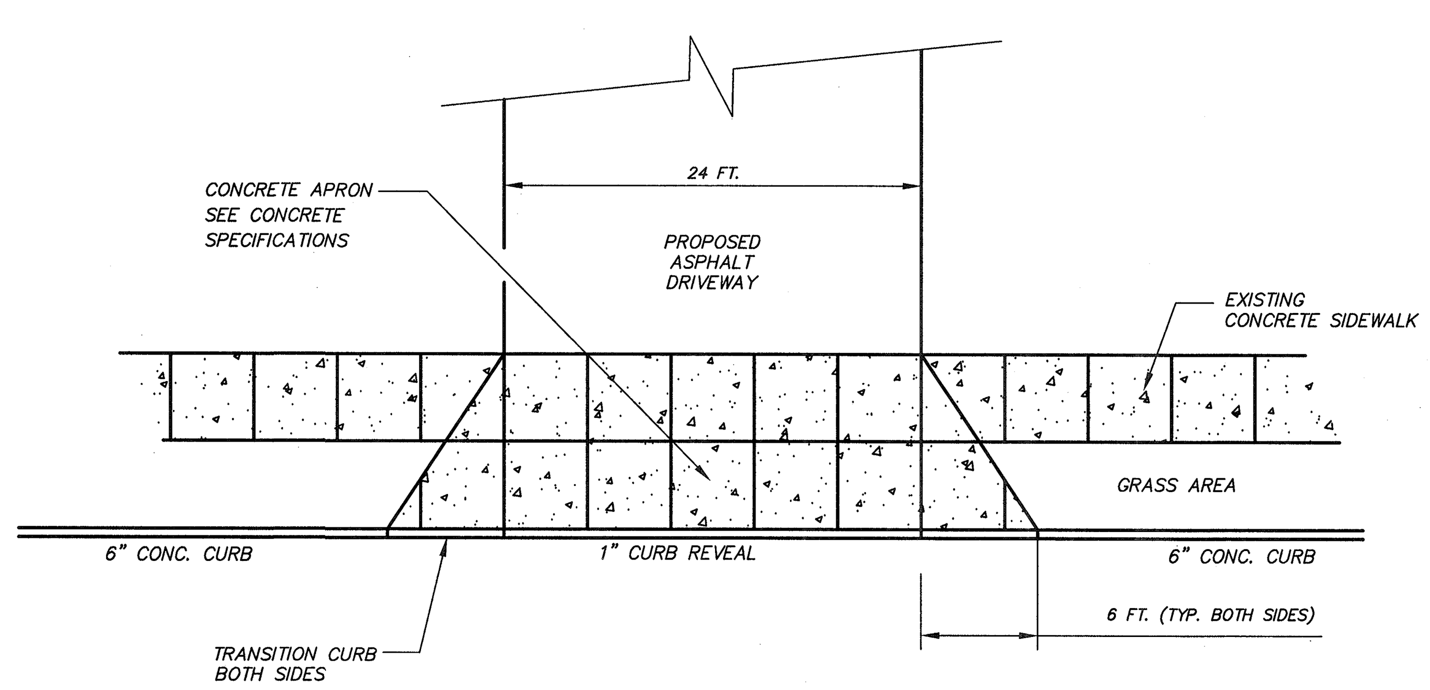


## DROP CURB AT COMMERCIAL DRIVEWAY

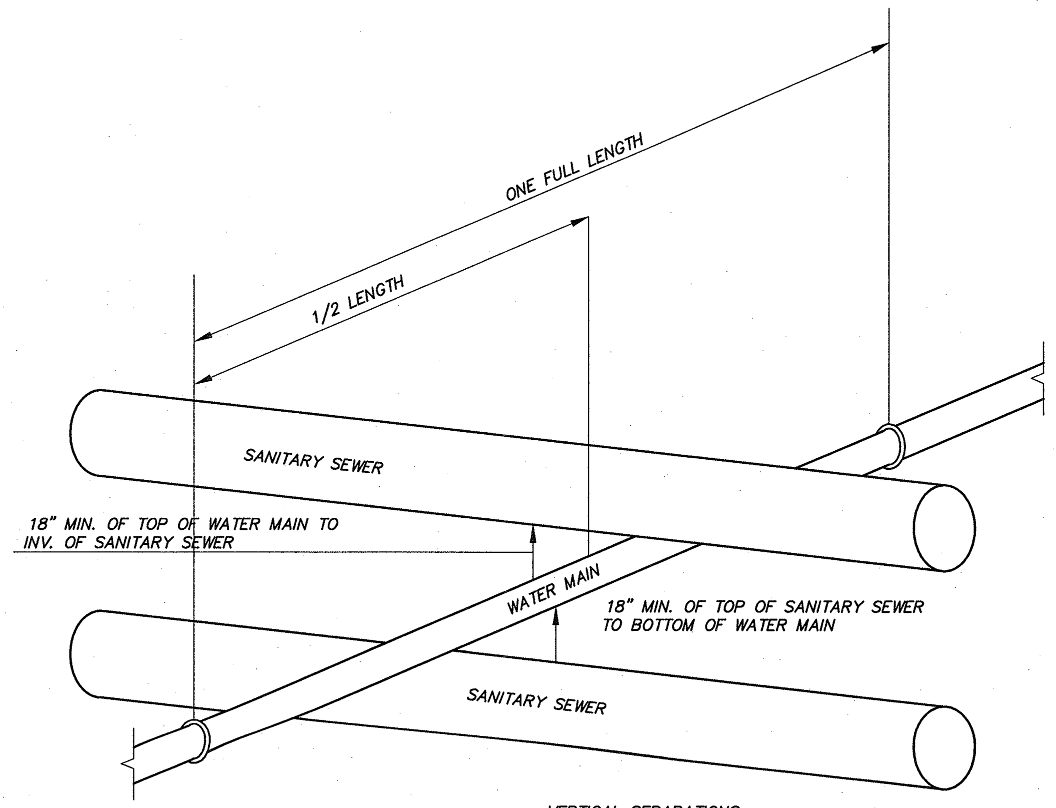


NOTES:
WHEN IT IS IMPOSSIBLE TO OBTAIN PROPER HORIZONTAL & VERTICAL SEPARATIONS AS STIPULATED ABOVE , ONE OF THE FOLLOWING METHODS MUST BE SPECIFIED(IN ACCORDANCE WITH TEN STATES STANDARDS):

HORIZONTAL SEPARATION:

1) SEWERS SHALL BE LAID AT LEAST 10 FEET HORIZONTALLY FROM ANY EXISTING OR PROPOSED WATER MAIN. THE DISTANCE SHALL BE MEASURED EDGE TO EDGE.

VERTICAL SEPARATION:

2.) THE SEWER SHALL BE DESIGNED AND CONSTRUCTED EQUAL TO WATER PIPE , AND SHALL BE PRESSURE TESTED AT 150 PSI TO ASSURE WATER TIGHTNESS.

3.) EITHER THE WATER MAIN OR THE SEWER LINE MAY BE ENCASSED IN A WATER TIGHT CARRIER PIPE WHICH EXTENDS 10 FEET ON BOTH SIDES OF THE CROSSING, MEASURED PERPENDICULAR TO THE WATER MAIN . THE CARRIER PIPE SHALL BE OF MATERIALS APPROVED BY THE HEALTH DEPARTMENT FOR USE IN WATER MAIN CONSTRUCTION.

## WATER MAIN CROSSING

NO SCALE

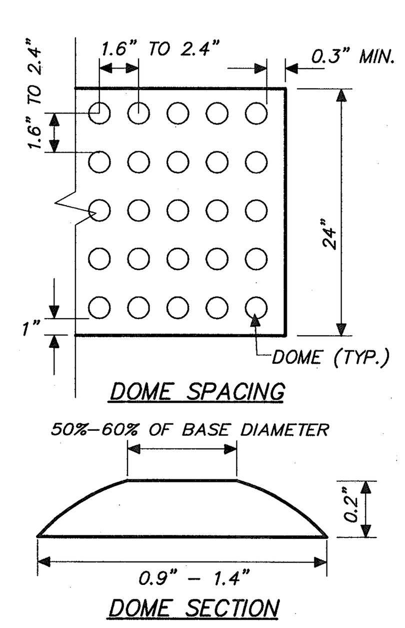


WARNING STRIP TO CONTRAST VISUALLY WITH ADJOINING SURFACES EITHER LIGHT-ON-DARK OR DARK-ON-LIGHT (ADAAG, Section 4.29.2)

## DETECTABLE WARNING STRIP DETAIL

( N.Y.S.D.O.T. ITEM NO. 608.21 )

NO SCALE

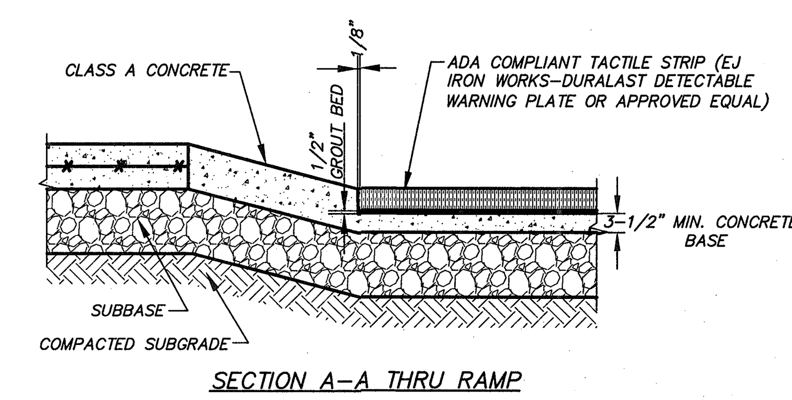


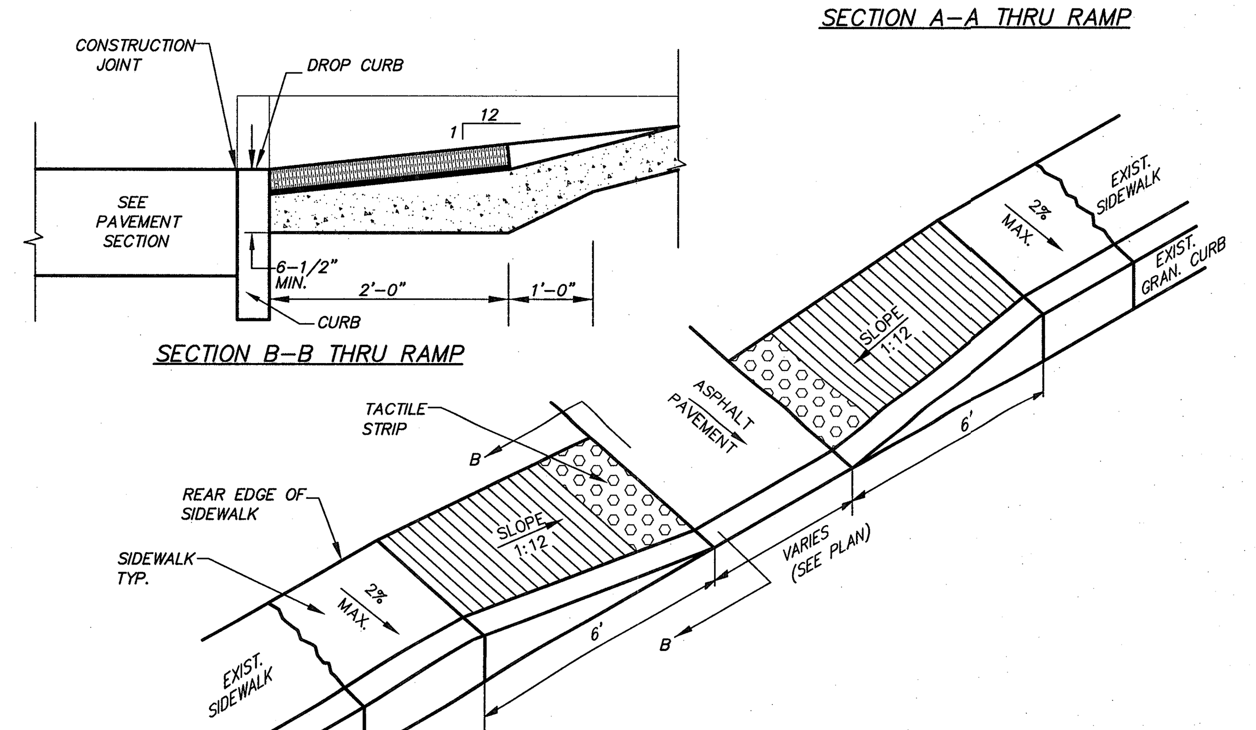


## HANDICAP RAMP DETAILS

NO SCALE

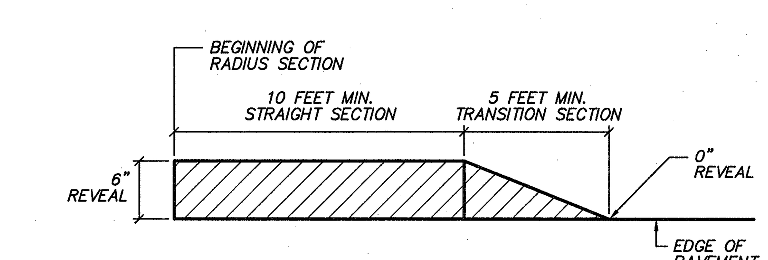


## CURB TRANSITION DETAIL

NO SCALE

APPLICANT:

AB ACQUISITIONS, LLC
298 TROY SCHENECTADY RD.
LATHAM, N.Y. 12110

OWNER:

WEST AVENUE DEVELOPMENT ASSOCIATES, LLC
120 WEST AVENUE, SUITE 201
SARATOGA SPRINGS, N.Y. 12866

CITY OF SARATOGA SPRINGS

Dig Safely. New York
Call 811
before you dig

| NO. | REVISION | BY | APPD. | DATE |
|---|---|---|---|---|
| A | ISSUED FOR SKETCH PLAN REVIEW | R.D.D. | N.C. | 4-25-16 |
| B | ISSUED FOR SITE PLAN REVIEW | R.D.D. | N.C. | 9-9-16 |

© COPYRIGHT 2016 ADVANCE ENGINEERING & SURVEYING, PLLC ALL RIGHTS RESERVED. UNAUTHORIZED DUPLICATION IS A VIOLATION OF APPLICABLE LAWS.

It is a violation of the Education Law of the State of New York, for any person, unless he is acting under the direction of a Licensed Professional Engineer, to alter this document in any way.

NICHOLAS COSTA, P.E.

Design of:
ADVANCE ENGINEERING & SURVEYING, PLLC
CONSULTING IN -
CIVIL & ENVIRONMENTAL ENGINEERING
LAND SURVEYING & DEVELOPMENT
COMMERCIAL AND RESIDENTIAL
11 HERBERT DRIVE, LATHAM, N.Y. 12110
PHONE: (518) 698-3772 E-MAIL: ncostape@gmail.com

# CONSTRUCTION DETAILS - 2
# MIXED USE DEVELOPMENT

WEST AVENUE CITY OF SARATOGA SPRINGS
COUNTY OF SARATOGA NEW YORK

DATE: SEPTEMBER, 2016 | SCALE: NONE | SHEET 7 OF 9

SHEET NO.
DET 2
7 OF 10 16046-SITE

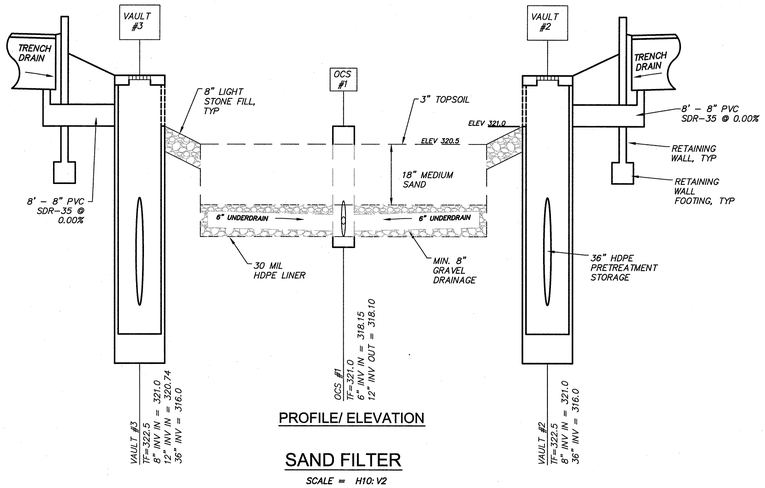


PROFILE/ ELEVATION

## SAND FILTER

SCALE = H10:V2

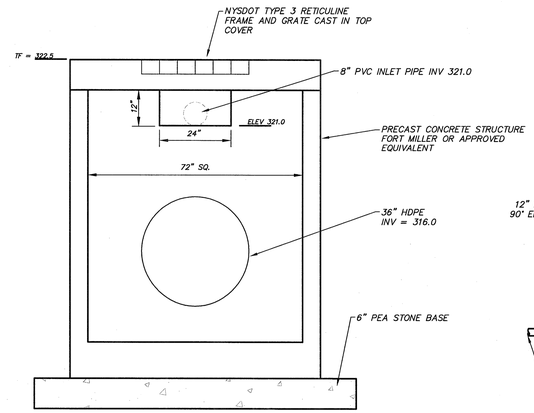


## SAND FILTER PRETREATMENT VAULTS #2 & #3

NO SCALE

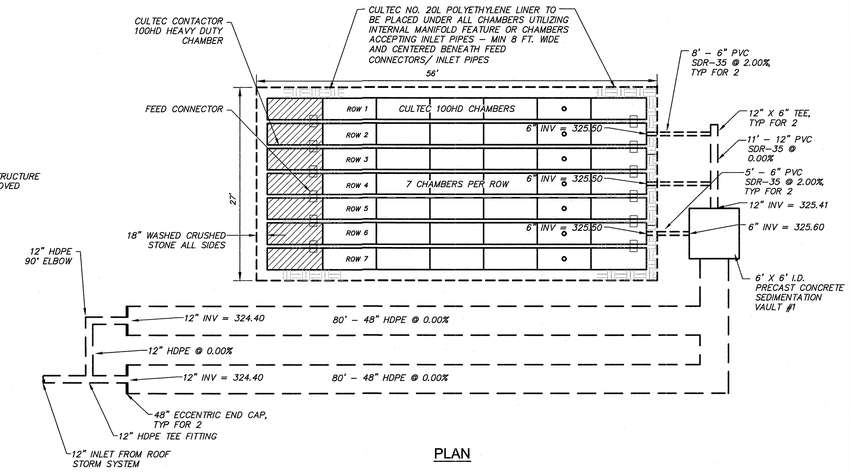


PLAN

## SUBSURFACE INFILTRATION SYSTEM

NO SCALE

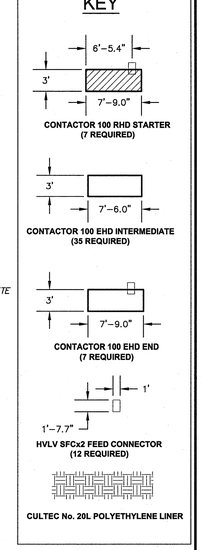


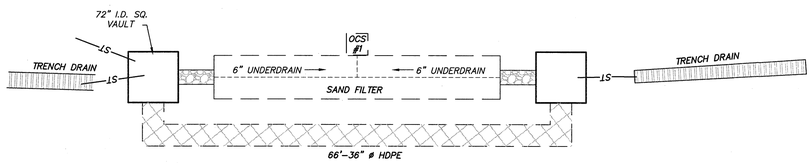


PLAN

## SAND FILTER

NO SCALE

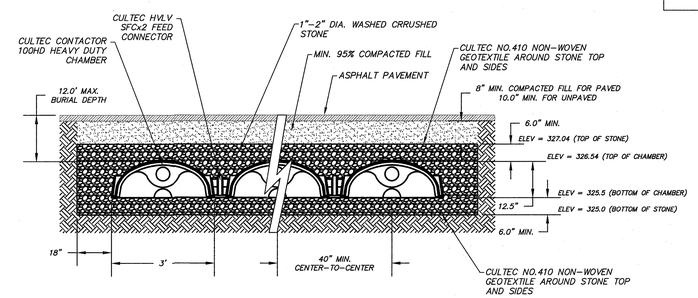


ELEVATION

## CULTEC CONTACTOR 100HD TYPICAL CROSS SECTION

NO SCALE

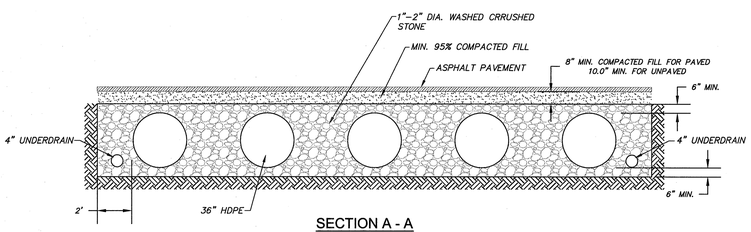


## SECTION A - A

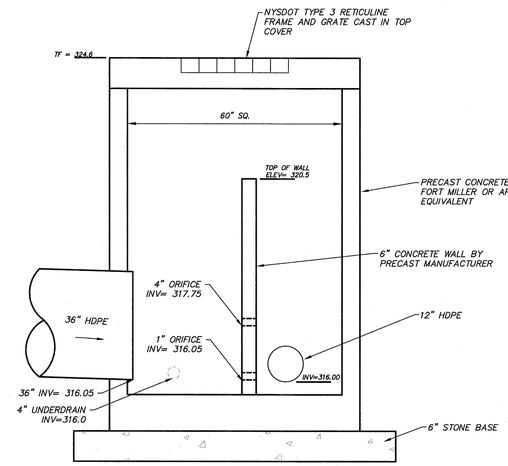


## OUTLET CONTROL STRUCTURE #2

NO SCALE

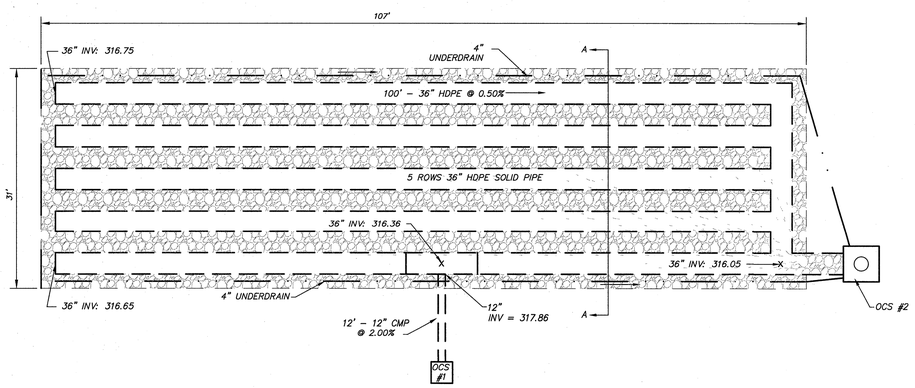


PLAN

## SUBSURFACE DETENTION SYSTEM

NO SCALE

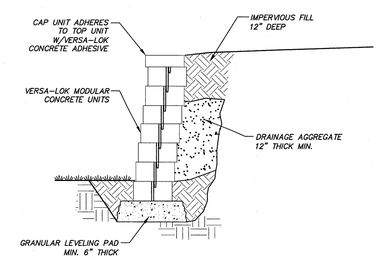


## TYPICAL SECTION- UNREINFORCED RETAINING WALL

NO SCALE

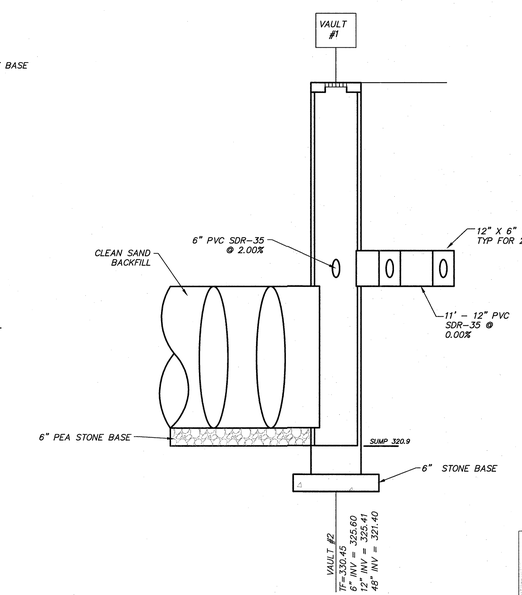


## VAULT #1

NO SCALE

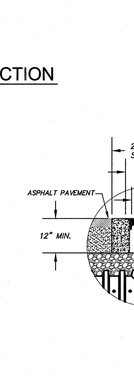


## TYPICAL INPECTION PORT

NO SCALE

Dig Safely. New York
Call 811 before you dig

CITY OF SARATOGA SPRINGS

| NO. | REVISION | BY | APPD. | DATE |
|---|---|---|---|---|
| A | ISSUED FOR SKETCH PLAN REVIEW | R.D.D. | N.C. | 4-25-16 |
| B | ISSUED FOR SITE PLAN REVIEW | R.D.D. | N.C. | 9-9-16 |


COPYRIGHT 2016 ADVANCE ENGINEERING & SURVEYING, PLLC ALL RIGHTS RESERVED. UNAUTHORIZED USE OR ALTERATION IS A VIOLATION OF APPLICABLE LAWS.

It is a violation of the Education Law of the State of New York for anyone, unless acting under the direction of a Licensed Professional Engineer, to alter this document in any way.


9/23/16
NICHOLAS COSTA, P.E.


Design of:
ADVANCE ENGINEERING & SURVEYING, PLLC
CONSULTING IN -
CIVIL & ENVIRONMENTAL ENGINEERING
LAND SURVEYING & DEVELOPMENT
COMMERCIAL AND RESIDENTIAL
11 HERBERT DRIVE, LATHAM, N.Y. 12110
PHONE: (518) 698-3772 E-MAIL: ncostape@gmail.com


# CONSTRUCTION DETAILS - 3
# MIXED USE DEVELOPMENT

WEST AVENUE CITY OF SARATOGA SPRINGS
COUNTY OF SARATOGA NEW YORK

DATE: SEPTEMBER, 2016 SCALE: NONE SHEET 7 OF 9

SHEET NO.
DET 3
8 OF 10 16046-SITE

## GENERAL NOTES:

1. THESE DRAWINGS SHOW SEDIMENT CONTROLS AND GRADING FOR CONSTRUCTION OF ROADS AND INFRASTRUCTURE ONLY. SEE NOTE 16 BELOW FOR ADDITIONAL GRADING INFORMATION.
2. GRADING OF CONTRACTOR SHALL VERIFY ALL CONDITIONS IN THE FIELD AND REPORT ANY DISCREPANCIES BETWEEN PLANS AND ACTUAL CONDITIONS TO THE ENGINEER.
3. CONTRACTOR SHALL PROVIDE DUST AND EROSION CONTROL PER NEW YORK STATE GUIDELINES FOR URBAN EROSION AND SEDIMENT CONTROL, BY NEW YORK STATE DEC. IN ADDITION, THE NOI, SWPPP AND THIS PLAN SHALL BE AVAILABLE ON-SITE AT ALL TIMES DURING CONSTRUCTION. ALL CONTRACTORS ENTERING THE SITE THAT WILL BE DISTURBING EARTH, ARE REQUIRED TO SIGN THE SWPPP, TO BE COVERED BY THE SPDES PERMIT FOR CONSTRUCTION ACTIVITY.
4. ALL POINTS OF CONSTRUCTION INGRESS OR EGRESS SHALL BE MAINTAINED TO PREVENT TRACKING OR FLOWING OF SEDIMENT OR DEBRIS ONTO PUBLIC ROADS.
5. CONTRACTOR SHALL BLEND ALL NEW EARTHWORK INTO EXISTING GRADES AT LIMITS OF GRADING WORK. PROVIDE SMOOTH, ROUNDED TRANSITIONS AT ALL TOP AND BOTTOM OF SLOPES.
6. ANY AREA OUTSIDE THE LIMIT OF WORK THAT IS DISTURBED SHALL BE RESTORED TO ITS ORIGINAL CONDITION AT NO COST TO THE OWNER.
7. EXCAVATION REQUIRED WITHIN 3 FEET OF EXISTING UTILITY LINES SHALL BE DONE BY HAND; DO NOT EXCAVATE SOIL WITH MACHINERY. CONTRACTOR SHALL REPAIR ANY DAMAGE TO EXISTING UTILITY LINES OR STRUCTURES INCURRED DURING CONSTRUCTION OPERATIONS AT NO ADDITIONAL COST TO OWNER.
8. CONTRACTOR SHALL NOTIFY OWNER WHEN ROUGH GRADING IS COMPLETE. FINISH GRADES SHALL BE ADJUSTED IN THE FIELD, WHEN NECESSARY, ONLY BY APPROVAL OF THE OWNER AND ENGINEER.
9. ALL AREAS REQUIRING FILL SHALL BE BROUGHT TO GRADE REQUIRED, IN 12" MAXIMUM COMPACTED LIFTS. GENERAL FILL SHALL BE FREE OF DELETERIOUS MATERIAL, CONTAIN NO GRAVEL LARGER THAN 3", AND SHALL BE COMPACTED IN AN APPROVED MANNER. SELECTION OF COMPACTION EQUIPEMENT IS THE CONTRACTORS RESPONSIBILITY. NO EQUIPMENT OR COMPACTION ACTIVITIES SHALL BE PERFORMED IN THE AREAS OF THE PROPOSED AND FUTURE DISPERSAL FIELDS.
10. ALL STORM SEWERS SHALL BE CONSTRUCTED ACCURATELY TO LINE AND GRADE, PROPERLY BEDDED, AND SHALL BE CONSTRUCTED SO THAT ALL JOINTS ARE SOIL TIGHT.
11. EXTEND DESIGNATED LIMIT OF WORK AS NECESSARY TO ACCOMPLISH ROUGH GRADING, TREE PROTECTION, AND SITE UTILITY WORK AS REQUIRED BY THESE DRAWINGS, OR THE APPROVED SUBDIVISION DRAWINGS.
12. PRIOR TO PROJECT CLOSE-OUT, CONTRACTOR SHALL REMOVE ALL DEBRIS AND EXCESS MATERIALS FROM SITE, AND STABILIZE ALL DISTURBED AREAS.
13. SLOPE SIDES OF EXCAVATIONS TO COMPLY WITH LOCAL CODES AND ORDINANCES HAVING JURISDICTION AND OSHA REGULATIONS. MAINTAIN SIDE SLOPES OF EXCAVATIONS IN A SAFE CONDITION UNTIL COMPLETION OF BACKFILLING.
14. DURING GRADING OPERATIONS, DRAINAGE OF THE SITE AND ADJACENT AREAS SHALL BE MAINTAINED CONTINUOUSLY, TO PREVENT EROSION OR OTHER DAMAGE. WHEN IT IS NECESSARY TO INTERRUPT DRAINAGE OR OTHER EXISTING UTILITIES, PROVIDE TEMPORARY FACILITIES UNTIL PERMANENT WORK IS COMPLETED.
15. ALL EXCAVATION TO MEET OSHA AND NYS DOT SAFETY STANDARDS.
16. CONTRACTOR TO COMPLY WITH ALL OSHA AND OTHER STATE AND LOCAL SAFETY REQUIREMENTS DURING CONSTRUCTION. (PROPER SHORING, ETC.).
17. THE CONTRACTOR SHALL VERIFY ALL EXISTING CONDITIONS AND DIMENSIONS IN FIELD PRIOR TO COMMENCEMENT OF WORK AND NOTIFY OWNER AND ENGINEER OF ANY DISCREPANCIES IMMEDIATELY.
18. UNDERGROUND UTILITY LOCATIONS ARE NOT GUARANTEED, NOR IS THERE ANY GUARANTEE THAT ALL EXISTING UTILITIES, WHETHER FUNCTIONING OR ABANDONED WITHIN THE PROJECT AREA SHOWN ON THESE DRAWINGS. THE CONTRACTOR SHALL DETERMINE THE EXACT LOCATION OF ALL UNDERGROUND UTILITIES BEFORE STARTING WORK AND SHALL BE RESPONSIBLE FOR ALL DAMAGE RESULTING FROM HIS WORK. CONTRACTOR SHALL NOTIFY DIG SAFELY, NY, FORMERLY (UFPO) 1-800-962-7962 IN ACCORDANCE WITH 16 NYCRR PART 753.

## WATER SYSTEM NOTES:

1.) A. ALL MATERIALS AND INSTALLATION SHALL FOLLOW THE APPROPRIATE AWWA QUIDELINES AND STANDARD SPECIFICATIONS.

2.) A. THE WATER SYSTEM PROVIDER IS THE CITY OF SARATOGA SPRINGS.

B. THE WATER SYSTEMS AND SERVICES SHALL BE SUPPLIED AND PLACED IN ACCORDANCE WITH ALL PROVIDER, LOCAL, STATE, AND FEDERAL REQUIREMENTS.

C. ALL WATER MAINS SHALL BE DISINFECTED IN ACCORDANCE WITH AWWA C-651 OR OTHER METHOD APPROVED BY THE WWSA. FOLLOWING FLUSHING, WATER SAMPLES SHALL BE COLLECTED FROM THE MAIN AND EACH BRANCH. BACTERIOLOGICAL SAMPLING AND TESTING IS REQUIRED TWO (2) DAYS AFTER DISINFECTION. TESTING SHALL BE PERFORMED BY NYSDOH CERTIFIED LAB. RESULTS SHALL BE REPORTED TO THE CITY OF SARATOGA SPRINGS, DESIGN ENGINEER AND NYSDOH. FIRE HYDRANTS ARE NOT ACCEPTABLE SAMPLING POINTS. WATER SAMPLES SHALL BE COLLECTED AND THE WATER MAIN SHALL NOT BE PLACED IN SERVICE UNTIL THE WATER HAS BEEN APPROVED AND NOTIFICATION THEREOF RECEIVED.

D. WATER MAINS SHALL BE CLEANED, INSPECTED, AND DISINFECTED IN ACCORDANCE WITH AWWA STANDARDS FOR DISINFECTING WATER MAINS C-651-92 (WITH THE EXCEPTION OF SECTION 5.1 TABLET METHOD), THAT WILL GIVE A 50 ppm RESIDUAL THROUGHOUT THE SYSTEM FOR A 24-hour PERIOD. AFTER 24 HOURS, RESIDUAL SHOULD BE AT LEAST 25 ppm. IF NOT, REPEAT PROCEDURE (REPAIRED, RETESTED, REDISINFECTED, REPRESSURE TESTED, AND REINSPECTED IF REQUIRED) IN ACCORDANCE WITH THE CITY OF SARATOGA SPRINGS, NYSDOH, AND ALL APPLICABLE REQUIREMENTS. RESULTS TO BE SUBMITTED TO THE TOWN, DESIGN ENGINEER. NO PIPELINE INSTALLATION WILL BE APPROVED WHEN LEAKAGE IS GREATER THAN THAT DETERMINED BY THE FOLLOWING FORMULA:

$$L = \frac{S\ D\ P^{(1/2)}}{133{,}200}$$

L = ALLOWABLE LEAKAGE, IN GALLONS PER HOUR (DOUBLE FOR THE REQUIRED 2-hour MINIMUM TEST)
S = LENGTH OF PIPE TESTED, IN FEET
D = NOMINAL DIAMETER OF PIPE IN INCHES
P = AVERAGE TEST PRESSURE DURING LEAKAGE TEST (PSIG)

EXAMPLE: THE MAXIMUM ALLOWABLE LEAKAGE OF 8" PIPE FOR A TWO-HOUR TEST PER ONE-THOUSAND-FOOT LENGTH OF PIPE SHALL BE 1.48 GALLONS AT 150 PSI PRESSURE.

$$\frac{S\ D\ P^{(1/2)}}{133{,}200} = \frac{(1000') \times (8") \times 150^{(1/2)}}{133{,}200} = 0.74 \text{ GALLONS PER HOUR} = 1.48 \text{ GALLONS FOR 2 HOURS}$$

E. CHLORINATED WATER FROM THE DISINFECTION PROCESS SHALL BE THOROUGHLY NEUTRALIZED WITH AN ACCEPTABLE CHEMICAL (SEE APPENDIX B OF AWWA C-651-92) PRIOR TO DISPOSAL, IF DISPOSAL IS NOT INTO A PUBLIC SEWER SYSTEM. THE NEUTRALIZATION PROCESS CAN TAKE PLACE IN A TANKER TRUCK OR OTHER MEANS ACCEPTABLE TO REGULATORY AGENCIES.

F. THE MINIMUM SEPARATION DISTANCE BETWEEN WATER SERVICES AND SEWER LINES SHALL BE 18 INCHES MEASURED VERTICALLY FROM THE OUTSIDE OF PIPE TO OUTSIDE OF PIPE. WATER SERVICES AND SEWER LINES RUNNING PARALLEL SHALL HAVE A MINIMUM HORIZONTAL SEPARATION DISTANCE OF 10 FEET MEASURED FROM OUTSIDE OF PIPE TO OUTSIDE OF PIPE. A MINIMUM SEPARATION DISTANCE OF 4 FEET SHALL BE MAINTAINED BETWEEN THE WATER MAIN AND ALL CATCH BASINS.

3.) PER NYSDOH, TOWN WATER DEPARTMENT AND STATE UNDERWRITER REQUIREMENTS, ACTUAL HYDRANT FIRE FLOW, STATIC AND RESIDUAL PRESSURE TESTING WILL BE PERFORMED AND REPORTED TO SAID PARTIES.

WATERLINE CONSTRUCTION FIELD QUALITY CONTROL

A. CLEAR INTERIOR OF PIPING AND STRUCTURES OF DIRT AND SUPERFLUOUS MATERIAL AS THE WORK PROGRESSES.
MAINTAIN SWAB OR DRAG IN PIPING AND PULL PAST EACH JOINT AS IT IS COMPLETED.
1. IN LARGE, ACCESSIBLE PIPING, BRUSHES AND BROOMS MAY BE USED FOR CLEANING.
2. PLACE PLUG IN END OF INCOMPLETE PIPING AT END OF DAY AND WHENEVER WORK STOPS.
3. FLUSH PIPING BETWEEN MANHOLES AND OTHER STRUCTURES TO REMOVE COLLECTED DEBRIS.

B. TEST NEW PIPING SYSTEMS AND PARTS OF EXISTING SYSTEMS THAT HAVE BEEN ALTERED, EXTENDED, OR REPAIRED
FOR LEAKS AND DEFECTS IN ACCORDANCE WITH AWWA C600-93 OMITTING 5B.
1. DO NOT ENCLOSE, COVER, OR PUT INTO SERVICE BEFORE INSPECTION AND APPROVAL.
2. TEST COMPLETED PIPING SYSTEMS ACCORDING TO AUTHORITIES HAVING JURISDICTION.
3. SCHEDULE TESTS, AND THEIR INSPECTIONS BY AUTHORITIES HAVING JURISDICTION, WITH AT LEAST 24 HOURS ADVANCE NOTICE.
4. SUBMIT SEPARATE REPORTS FOR EACH TEST.
5. WHERE AUTHORITIES HAVING JURISDICTION DO NOT HAVE PUBLISHED PROCEDURES, PERFORM TEST AS FOLLOWS:
   A. ALLOWABLE LEAKAGE IS A MAXIMUM OF 50 GALLONS PER INCH NOMINAL PIPE SIZE, FOR EVERY MILE OF PIPE, DURING A 24-HOUR PERIOD.
   B. SANITARY SEWER: PERFORM AIR TEST ACCORDING TO UNI-B-6 AND ASTM C828.
   C. FORCEMAIN: PERFORM AIR TEST ACCORDING TO UNI-B-6 AND ASTM C828.
6. PRECAST CONCRETE STRUCTURES: PERFORM HYDRAULIC TEST ACCORDING TO ASTM C 969.
7. LEAKS AND LOSS IN TEST PRESSURE CONSTITUTE DEFECTS THAT MUST BE REPAIRED.
8. REPLACE LEAKING PIPING USING NEW MATERIALS AND REPEAT TESTING UNTIL LEAKAGE IS WITHIN ALLOWANCES SPECIFIED.

PRESSURE TESTS SHALL BE MADE ONLY AFTER THE COMPLETION OF BACKFILLING OPERATIONS, AND AT LEAST 36 HOURS AFTER THE CONCRETE THRUST BLOCKS HAVE BEEN CAST. ALL TESTS SHALL BE CONDUCTED UNDER THESUPERVISION OF THE ENGINEER.

THE DURATION OF PRESSURE TESTS SHALL BE ONE HOUR, UNLESS OTHERWISE DIRECTED BY THE ENGINEER. THE TEST PRESSURE SHALL BE NO LESS THAN 150 PSI FOR HYDROSTATIC TESTING ONLY, WITH A RECOMMENDED PRESSURE OF 2.5 TIMES THE MAXIMUM SYSTEM OPERATING PRESSURE.

THE PIPE LINE SHALL BE SLOWLY FILLED WITH WATER. BEFORE APPLYING THE SPECIFIED PRESSURE, ALL AIR SHALL BE EXPELLED FROM THE PIPELINE BY MAKING TAPS AT THE POINT OF HIGHEST ELEVATION. THE SPECIFIED PRESSURE,MEASURED AT THE LOWEST POINT OF ELEVATION, SHALL BE APPLIED BY MEANS OF A PUMP CONNECTED TO THE PIPE IN A MANNER SATISFACTORY TO THE ENGINEER. AFTER COMPLETION OF THE TEST, THE TAPS SHALL BE TIGHTLY PLUGGED.

Dig Safely. New York
Call 811 before you dig

APPLICANT:
AB ACQUISITIONS, LLC
298 TROY SCHENECTADY RD.
LATHAM, N.Y. 12110

OWNER:
WEST AVENUE DEVELOPMENT ASSOCIATES, LLC
120 WEST AVENUE, SUITE 201
SARATOGA SPRINGS, N.Y. 12866

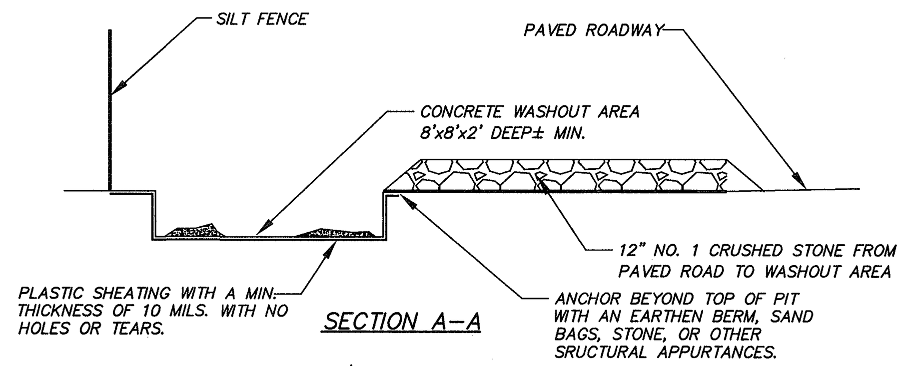


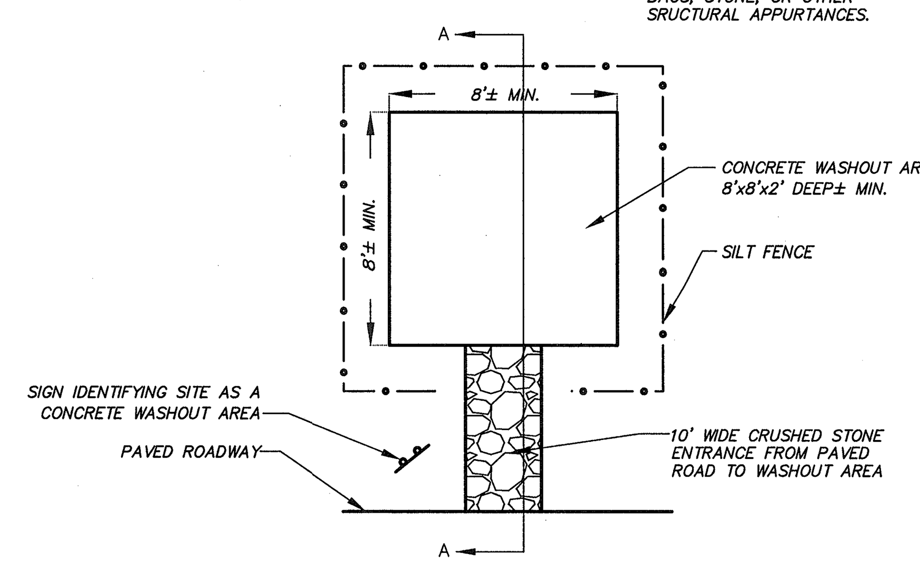


### CONCRETE WASHOUT AREA
NO SCALE

NOTES:

1) CONTRACTOR SHALL CLEAN OUT THE CONCRETE WASHOUT AREA WHENEVER IT IS HALF-FULL AND SHALL DISPOSE OF DEBRIS.

2) UPON COMPLETION OF CONSTRUCTION, THE CONTRACTOR SHALL CLEAN OUT AND FILL IN THE WASHOUT AREA TO THE ADJACENT GRADE LEVEL.

## CONSTRUCTION SEQUENCE

- VERIFY LOCATION OF EXISTING STRUCTURES AND UTILITIES.
- EXCAVATE AREA LARGE ENOUGH TO ACCOMMODATE LEVELING PAD, REQUIRED UNIT EMBEDMENT, AND REQUIRED GEOGRID LENGTHS.
- PROOF ROLL AND COMPACT EXCAVATED FOUNDATION AREA.

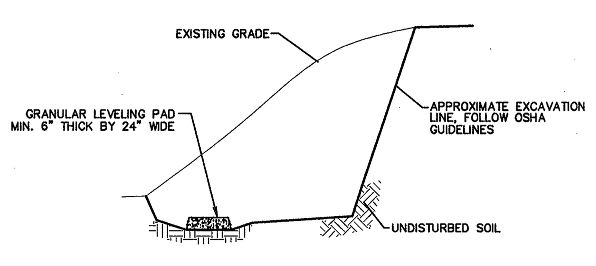


STEP 1

- PLACE LOWEST COURSE OF WALL UNITS ON LEVELING PAD, SETTING UNIT SIDES AGAINST ADJACENT UNITS.
- LEVEL UNITS SIDE-TO-SIDE, FRONT-TO-REAR, AND WITH ADJACENT UNITS.
- CHECK ALIGNMENT ALONG BACK OF UNITS.
- PLACE AND COMPACT BACKFILL IN FRONT AND BEHIND UNITS TO BE EMBEDDED BELOW FINAL GRADE.

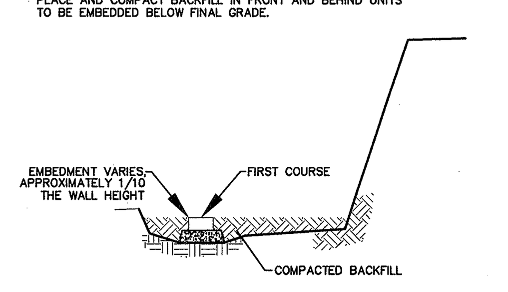


STEP 2

- PLACE NEXT COURSE OF UNITS. INSERT TWO CONNECTION PINS THROUGH TWO OF THE FOUR CENTER HOLES OF THE UPPER COURSE UNITS INTO THE CENTER SLOTS OF THE LOWER COURSE UNITS.
- CHECK LEVEL AND ALIGNMENT OF UNITS.
- CONTINUE PLACING COURSES OF UNITS AND COMPACTING BACKFILL IN FRONT OF AND BEHIND UNITS UNTIL REACHING HEIGHT OF FINAL GRADE IN FRONT OF WALL.
- BEGINNING JUST ABOVE THE FINAL GRADE IN FRONT OF WALL, PLACE DRAINAGE AGGREGATE BEHIND THE UNITS TO REQUIRED THICKNESS.
- INSTALL DRAINAGE COLLECTION PIPES AT BASE OF DRAINAGE AGGREGATE, WITH PERFORATION OR SLOTS FACING DOWN. SLOPE DRAIN PIPE TO ALLOW GRAVITY FLOW OF WATER TO OUTSIDE THE WALL SYSTEM, OUTLETTING PIPES AS REQUIRED. PLACE AND COMPACT REINFORCED BACKFILL BEHIND DRAINAGE AGGREGATE.

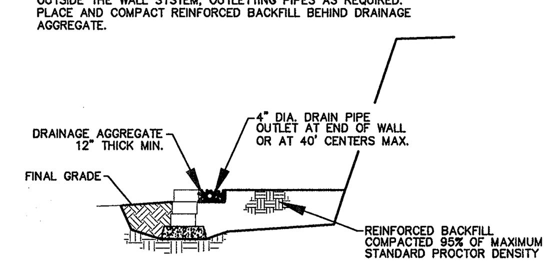


STEP 3

- CONTINUE PLACING UNITS, DRAINAGE AGGREGATE AND REINFORCED BACKFILL, UNTIL REACHING HEIGHT OF GEOSYNTHETIC LAYER.
- LAY THE REQUIRED LENGTH OF GEOSYNTHETIC HORIZONTALLY ON TOP OF THE UNITS, ENSURING HIGHEST STRENGTH DIRECTION OF GEOSYNTHETIC IS PERPENDICULAR TO WALL FACE.
- PLACE NEXT COURSE OF UNITS ON TOP OF GEOSYNTHETIC AND PIN DOWN THROUGH GEOSYNTHETIC INTO UNITS BELOW.
- PLACE DRAINAGE AGGREGATE BEHIND UNITS TO REQUIRED THICKNESS.
- PULL BACK OF GEOSYNTHETIC TO REMOVE ANY WRINKLES OR LOOSENESS. DO NOT OVER TENSION. USE STAPLES, STAKES, OR HAND TENSION TO KEEP GEOSYNTHETIC TAUT UNTIL BACKFILL IS PLACED ON TOP.

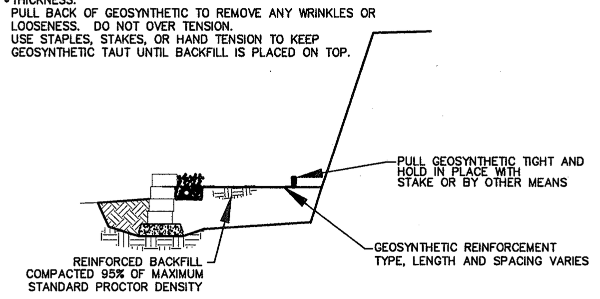


STEP 4

- CONTINUE PLACEMENT OF WALL UNITS, GEOSYNTHETIC, DRAINAGE AGGREGATE AND REINFORCED BACKFILL BY REPEATING STEP 4 UNTIL WALL IS WITHIN ONE FOOT OF FINAL HEIGHT.
- STACK NO MORE THAN THREE COURSES BEFORE BACKFILL IS PLACED BEHIND WALL.
- COMPACT BACKFILL IN NO GREATER THAN 6" THICK LIFTS.

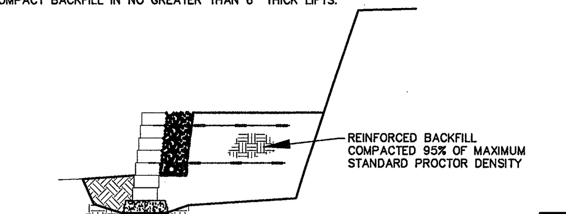


STEP 5

- PLACE AND COMPACT IMPERVIOUS SOIL BEHIND THE TOP 12 INCHES OF THE WALL.
- PLACE AND ALIGN CAP UNITS, WITH A SLIGHT OVERHANG, ON TOP COURSE.
- AFTER ENSURING PROPER ALIGNMENT, REMOVE AND THEN ADHERE CAPS WITH VERSA-LOK ADHESIVE.

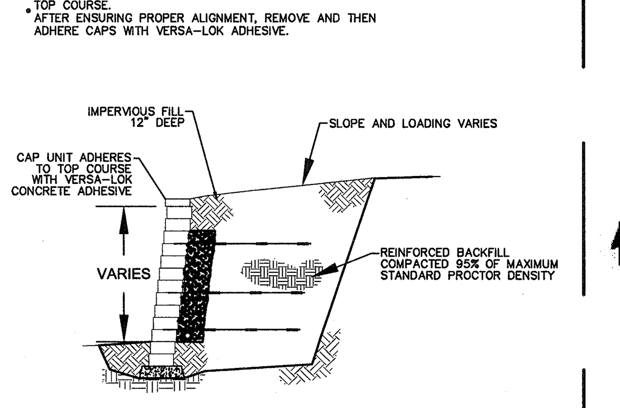


STEP 6

## INSTALLATION NOTES:

- STRIP VEGETATION AND ORGANIC SOIL FROM WALL AND GEOSYNTHETIC ALIGNMENT.
- BENCH CUT ALL EXCAVATED SLOPES.
- DO NOT EXCAVATE BEYOND EXCAVATION LINES SHOWN ON PLAN UNLESS DIRECTED BY SITE SOILS ENGINEER TO REMOVE UNSUITABLE SOIL.
- CONTRACTOR SHALL ENSURE TEMPORARY EXCAVATIONS ARE STABLE AND PROVIDE EXCAVATION SUPPORT IF NEEDED.
- SITE SOILS ENGINEER SHALL VERIFY FOUNDATION SOILS AS BEING COMPETENT PER THE DESIGN PARAMETERS.
- LEVELING PAD SHALL CONSIST OF WELL GRADED ROAD BASE AGGREGATE, 3/4" CRUSHED, ANGULAR GRAVEL WITH SOME FINES
- CONTRACTOR MAY OPT FOR A LEAN CONCRETE LEVELING PAD. PAD SHALL BE UNREINFORCED LEAN CONCRETE, 200-300 PSI, 3" THICK MAXIMUM.
- DRAINAGE AGGREGATE SHALL CONSIST OF CLEAN ANGULAR GRAVEL, 3/4" DIAMETER WITH LESS THAN 5 % FINES.
- DRAINAGE PIPE SHALL BE PERFORATED OR SLOTTED PVC OR CORRUGATED HDPE PIPE.
- REINFORCED BACKFILL SHALL BE FREE OF DEBRIS, ORGANIC SOIL, AND EXPANSIVE SOILS.
- FOR UNITS TO BE EMBEDDED, COMPACT FILL IN FRONT OF UNITS AT THE SAME TIME FILL BEHIND UNITS IS COMPACTED.
- COMPACTION SHALL BE TO 95% OF MAXIMUM STANDARD PROCTOR DENSITY. (ASTM D-698)
- COMPACTION TESTS SHALL BE TAKEN AS THE WALL IS INSTALLED. THE MINIMUM NUMBER OF TESTS SHALL BE DETERMINED BY THE SITE SOILS ENGINEER.
- COMPACTION WITHIN 3FT. OF WALL SHALL BE LIMITED TO HAND OPERATED EQUIPMENT.
- CONTRACTOR SHALL SLOPE SITE GRADES TO DIRECT SURFACE RUNOFF AWAY FROM WALL AT END OF EACH DAY TO AVOID WATER DAMAGING THE WALL WHILE UNDER CONSTRUCTION.
- ANY SURFACE DRAINAGE FEATURES, FINISH GRADING, PAVEMENT, OR TURF SHALL BE INSTALLED IMMEDIATELY AFTER WALL IS COMPLETED.
- FOLLOW APPLICABLE PROVISIONS OF THE WALL UNIT AND GEOSYNTHETIC MANUFACTURER'S INSTALLATION INSTRUCTIONS AND WRITTEN SPECIFICATIONS.
- IF SITE AND SOIL CONDITIONS, WALL GEOMETRY, OR WALL LOADINGS ARE DIFFERENT THAN IN THE DRAWINGS AND THE DESIGN PARAMETERS, THE CONTRACTOR MUST CONTACT DESIGN ENGINEER PRIOR TO PROCEEDING WITH THE CONSTRUCTION OF THE WALL.

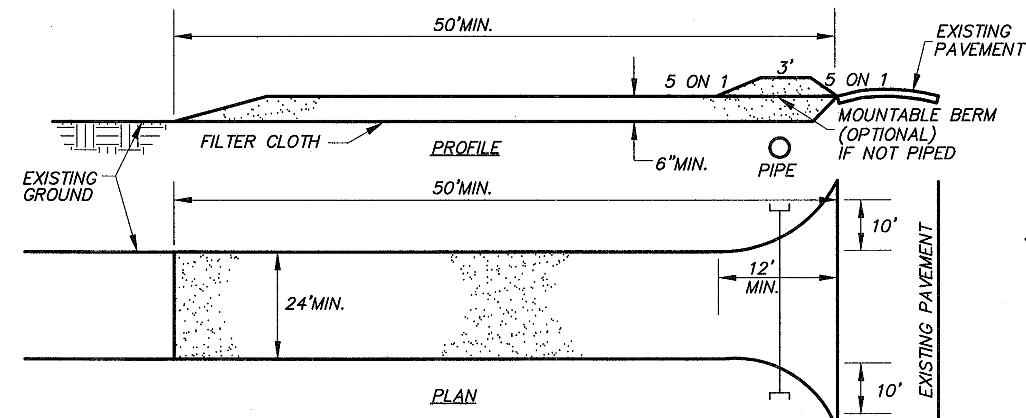


CONSTRUCTION SPECIFICATIONS

1. STONE SIZE- USE 2" STONE, OR RECLAIMED OR RECYCLED CONCRETE EQUIVALENT.
2. LENGTH - AS REQUIRED, BUT NOT LESS THAN 30 FEET
3. THICKNESS - NOT LESS THAN SIX (6) INCHES.
4. WIDTH - NOT LESS THAN THE FULL DRIVEWAY WIDTH AT POINTS WHERE INGRESS OR EGRESS OCCURS. 24' MINIMUM IF SINGLE ENTRANCE TO SITE.
5. FILTER CLOTH - WILL BE PLACED OVER THE ENTIRE AREA PRIOR TO PLACING OF STONE.
6. SURFACE WATER - ALL SURFACE WATER FLOWING OR DIVERTED TOWARD CONSTRUCTION ENTRANCES SHALL BE PIPED ACROSS THE ENTRANCE. IF PIPING IS IMPRACTICAL, A MOUNTABLE BERM WITH 5:1 SLOPES WILL BE PERMITTED.
7. MAINTENANCE - THE ENTRANCE SHALL BE MAINTAINED IN A CONDITION WHICH WILL PREVENT TRACKING OR FLOWING OF SEDIMENT ONTO PUBLIC RIGHT-OF-WAYS. THIS MAY REQUIRE PERIODIC TOP DRESSING WITH ADDITIONAL STONE, AS CONDITIONS DEMAND, AND REPAIR AND/OR CLEANING OF ANY MEASURES USED TO TRAP SEDIMENT.
8. WASHING - WHEELS SHALL BE CLEANED WHEN NECESSARY TO REMOVE SEDIMENT PRIOR TO ENTRANCE ONTO PUBLIC RIGHTS-OF-WAY. WHEN WASHING IS REQUIRED, IT SHALL BE DONE ON AN AREA STABILIZED WITH STONE AND WHICH DRAINS INTO AN APPROVED SEDIMENT TRAPPING DEVICE.
9. PERIODIC INSPECTION AND NEEDED MAINTENANCE SHALL BE PROVIDED AFTER EACH RAIN.

### STABILIZED CONSTRUCTION ENTRANCE
NO SCALE

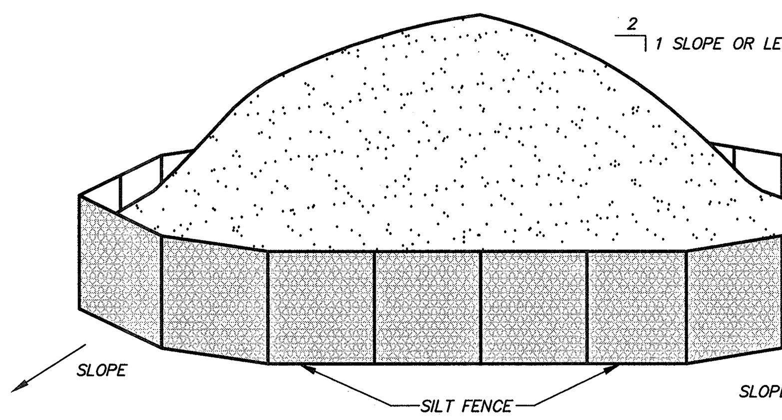


1. AREA CHOSEN FOR STOCKPILING OPERATIONS SHALL BE DRY AND STABLE.
2. MAXIMUM SLOPE OF STOCKPILE SHALL BE 1: 2
3. SILT FENCE SHALL BE PLACED 5-FEET DOWNSLOPE OF EACH PILE. UPON COMPLETION OF SOIL STOCKPILING, TOPSOIL SHALL BE STABILIZED WITH SEED AND MULCH IF NOT TO BE DISTURBED/UTILIZED WITHIN 14 DAYS.
4. SEE ADDITIONAL DETAILS FOR INSTALLATION OF SILT FENCE.
5. TEMPORARY PERIMETER DIKES MAY BE REQUIRED TO DIRECT CLEAN RUNOFF FROM STOCKPILE AREAS. REFER TO EROSION AND SEDIMENT CONTROL PLAN.

### SOIL STOCKPILE STABILIZATION
NO SCALE

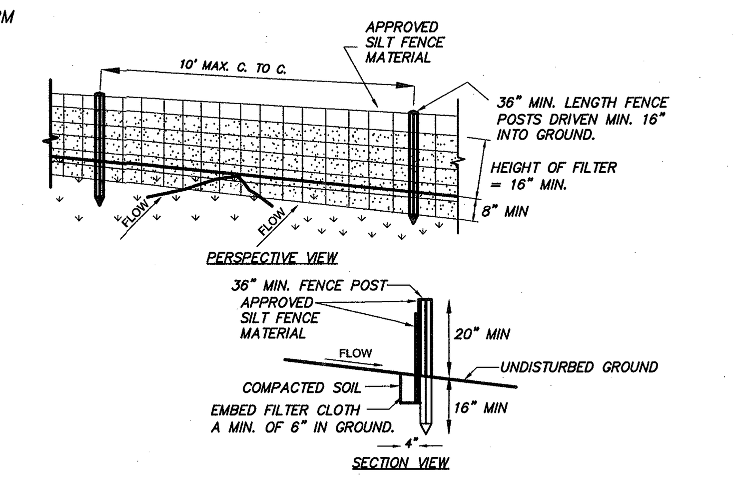


CONSTRUCTION SPECIFICATIONS

1. SILT FENCE TO BE FASTENED SECURELY TO FENCE POSTS WITH WIRE TIES OR STAPLES. POSTS SHALL BE STEEL EITHER "T" OR "U" TYPE OR HARDWOOD.

2. FILTER CLOTH TO BE FASTENED SECURELY TO SILT FENCE FENCE WITH TIES SPACED EVERY 24" AT TOP AND MID SECTION. FENCE SHALL BE APPROVED MATERIAL, 6" MAXIMUM MESH OPENING.

3. WHEN TWO SECTIONS OF FILTER CLOTH ADJOIN EACH OTHER THEY SHALL BE OVER-LAPPED BY SIX INCHES AND FOLDED. FILTER CLOTH SHALL BE EITHER FILTER X, MIRAFI 100X, STABILINKA T140N, OR APPROVED EQUIVALENT.

4. PREFABRICATED UNITS SHALL BE GEOFAB, ENVIROFENCE, OR APPROVED EQUIVALENT.
5. MAINTENANCE SHALL BE PERFORMED AS NEEDED AND MATERIAL REMOVED WHEN "BULGES" DEVELOP IN THE SILT FENCE.

### SILT FENCE
NO SCALE

## EROSION CONTROL AND STORMWATER MANAGEMENT:

1. THE CONTRACTOR SHALL MAINTAIN A COPY OF THE STORM WATER POLLUTION PREVENTION PLAN (SWPPP) ON SITE AND SHALL SIGN THE AGREEMENT TO COMPLY WITH THE PLAN AS A CONDITION OF AUTHORIZATION TO DISCHARGE STORM WATER ASSOCIATED WITH CONSTRUCTION ACTIVITIES.
2. PRIOR TO CONSTRUCTION EQUIPMENT ENTERING OR EXITING THE SITE, A CONSTRUCTION ENTRANCE SHALL BE BUILT UNLESS EXISTING CONDITIONS PREVENT ANY TRACKING OF DIRT, MUD, OR DEBRIS OFF THE SITE. THE CONTRACTOR WILL BE RESPONSIBLE TO KEEP ALL ROAD, PARKING SPACES, SIDEWALKS AND ADJACENT PROPERTIES FREE OF DIRT OR OTHER DEBRIS. THIS WILL INCLUDE SCRAPING AND WASHING THE PAVEMENT SURFACES WHENEVER NEDDED. THE CONSTRUCTION ENTRANCE SHALL BE CONSTRUCTED AS SHOWN ON THE PLANS. THE ENTRANCE SHOULD BE LOCATED THAT ALL VEHICLES LEAVING THE SITE SHALL UTILIZE IT.
3. ALL EROSION CONTROL DEVICES SHALL BE PLACED AS SHOWN ON THE DRAWINGS AND IN ACCORDANCE WITH THE FEDERAL, STATE, LOCAL AND MANUFACTURERS RECOMMENDATIONS. THE CONTRACTOR SHALL PLACE AND MAINTAIN ALL EROSION CONTROL DEVICES AS NEEDED THROUGHOUT THE PROJECT.
4. SILT FENCE SHALL HAVE HARDWOOD STAKES 2X2 INCH AND 4 FEET LONG, WOVEN INTO THE FABRIC. THE BASE OF THE SILT FENCE SHALL BE EXCAVATED SO AS TO PROVIDE AN AREA TO BURY THE BOTTOM OF THE FABRIC AT LEAST 8" INTO THE GROUND. THE STAKES SHALL BE DRIVEN TO A DEPTH THAT WILL PLACE THE BOTTOM FABRIC AT THE BOTTOM OF THE TRENCH. THEN BACK FILL THE BOTTOM FABRIC ON THE UPSTREAM SIDE WITH THE MATERIAL THAT WAS EXCAVATED.
5. SILT FENCE SHALL BE PLACED WHEREVER SURFACE DRAINAGE CAN LEAVE THE SITE AND AT THE TOE OF THE FILL SLOPES TO PROTECT THE WETLANDS.
6. STONE CHECK DAMS SHALL BE PLACED IN ALL DRAINAGE WAYS, BUT NOT IN STREAMS, CREEKS OR RIVERS. STONE FILTERS SHALL CONSIST OF UNIFORM MIX OF ¼" TO ¾" CLEAN STONE QRAPPED IN FILTER FABRIC AND COVERED WITH 4" STONE.
7. AREAS SHALL BE TEMPORARY SEEDED WHEN THEY ARE SUBJECT TO EROSION AND WILL LIE DORMANT FOR A PERIOD OF 7 DAYS OR MORE.
   7.A. IF SPRING, SUMMER OR EARLY FALL; SEED WITH RYE GRASS (ANNUAL OR PERENNIAL) AT 30 LBS. PER ACRE (APPROXIAMATELY 0.7 LB/1000 SQ. FT. OR USE 1 LB/1000 SQ. FT.)
   7.B. IF LATE FALL OR EARLY WINTER; THEN SEED WITH CERTIFIED 'AROOSTOCK' WINTER RYE (CEREAL RYE) AT 100 LBS. PER ACRE (2.5 LB/1000 SQ. FT.)
8. MULCH THE AREA WITH HAY OR STRAW AT 2 TONS/ACRE (APPROX. 0.05 LB/SQ. FT.). QUALITY OF HAY OR STRAW MULCH ALLOWABLE WILL BE DETERMINED BASED ON LONG TERM USE AND VISUAL CONCERNS. MULCH ANCHORING WILL BE REQUIRED WHERE WINDS OR AREAS OF CONCENTRATED WATER ARE OF CONCERN.
9. EROSION CONTROL NOTE:
   THE FOLLOWING CONDITIONS SHALL BE MET PRIOR TO THE CITY OF SARATOGA SPRINGS ACCEPTING DEICATION OF THE ROADWAY AND STORM DRAINAGE EASEMENTS:
   9.A. SEDIMENT SHALL BE REMOVED FROM ALL CATCH BASINS, DRYWELLS, DETENTION BASINS, AND STORM DRAINAGE PIPING PRIOR TO THE ROADWAY DEDICATION.

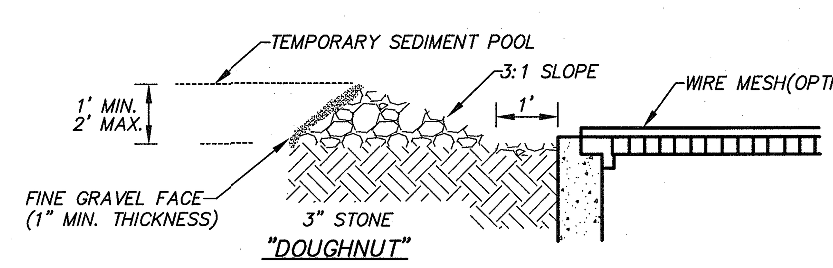


CONSTRUCTION SPECIFICATIONS

1. LAY ONE BLOCK ON EACH SIDE OF THE STRUCTURE ON ITS SIDE FOR DEWATERING. FOUNDATION SHALL BE 2" MINIMUM BELOW REST OF INLET AND BLOCKS SHALL BE PLACED AGAINST INLET FOR SUPPORT.
2. HARDWARE CLOTH OR ½" WIRE MESH SHALL BE PLACED OVER BLOCK OPENINGS TO SUPPORT STONE.
3. USE CLEAN STONE OR GRAVEL 1/2-¾ INCH IN DIAMETER PLACED 2" BELOW TOP OF THE BLOCK ON A 2:1 SLOPE OR FLATTER.
4. FOR STONE STRUCTURES ONLY, A 1 FOOT THICK LAYER OF FILTER STONE WILL BE PLACED AGAINST THE 3" STONE AS SHOWN ON THE DRAWINGS.
5. MAXIMUM DRAINAGE AREA 1 ACRE.

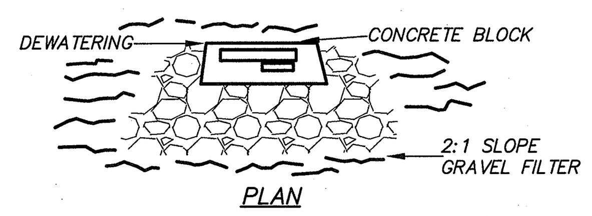


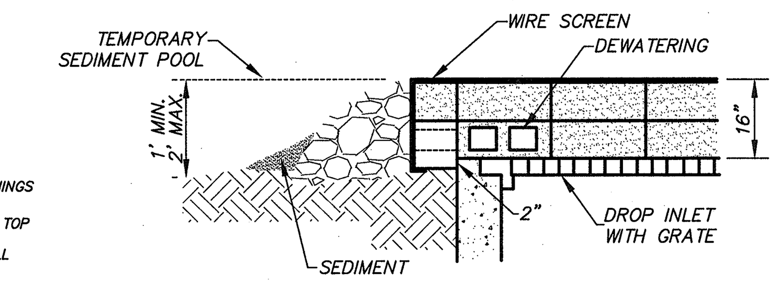


### STONE & BLOCK DROP INLET PROTECTION DETAIL
NO SCALE

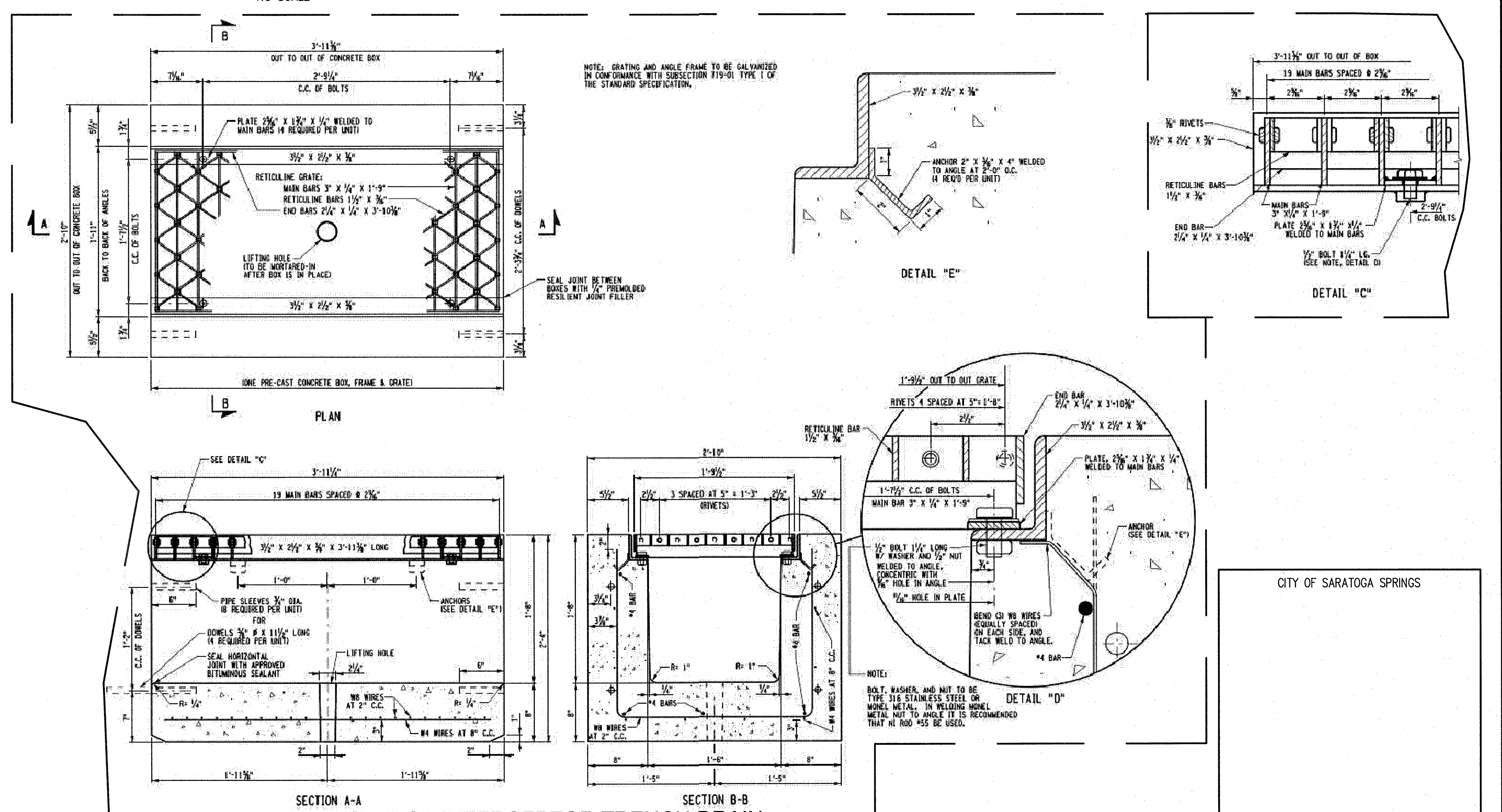


### TRANSVERSE INTERCEPTOR TRENCH DRAIN
NO SCALE

CITY OF SARATOGA SPRINGS

| NO. | REVISION | BY | APPD. | DATE |
|---|---|---|---|---|
| A | ISSUED FOR SKETCH PLAN REVIEW | R.D.D. | N.C. | 4-25-16 |
| B | ISSUED FOR SITE PLAN REVIEW | R.D.D. | N.C. | 9-9-16 |

© COPYRIGHT 2016
ADVANCE ENGINEERING & SURVEYING, PLLC
ALL RIGHTS RESERVED.
UNAUTHORIZED DUPLICATION IS A VIOLATION OF APPLICABLE LAWS.

It is a violation of the Education Law of the State of New York, for any person, unless he is acting under the direction of a Licensed Professional Engineer, to alter this document in any way.

NICHOLAS COSTA, P.E.

Design of:
ADVANCE ENGINEERING & SURVEYING, PLLC
CONSULTING IN -
CIVIL & ENVIRONMENTAL ENGINEERING
LAND SURVEYING & DEVELOPMENT
COMMERCIAL AND RESIDENTIAL
11 HERBERT DRIVE, LATHAM, N.Y. 12110
PHONE: (518) 698-3772 E-MAIL: ncostape@gmail.com

CONSTRUCTION DETAILS - 4
MIXED USE DEVELOPMENT

WEST AVENUE CITY OF SARATOGA SPRINGS
COUNTY OF SARATOGA NEW YORK

DATE: SEPTEMBER, 2016
SCALE: NONE
SHEET 8 OF 9

SHEET NO.
DET 4
9 OF 10 16046-SITE

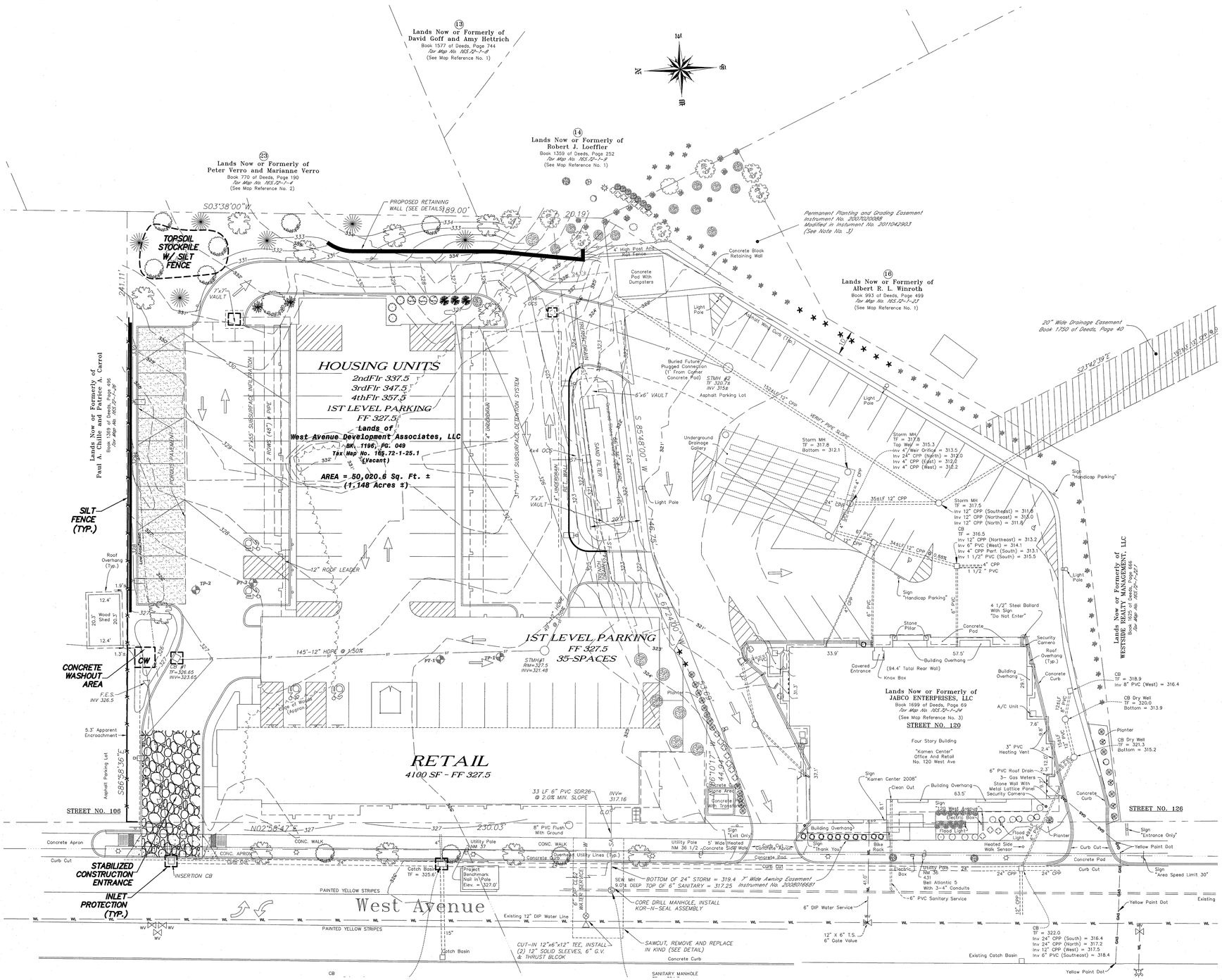


## EROSION & GRADING NOTES:

1. AREAS TO BE FILLED WILL BE CLEARED & GRUBBED. TOPSOIL WILL BE STOCKPILED FOR RE-USE.
2. FILL WILL BE PLACED IN LAYERS NOT TO EXCEED 9" & COMPACTED BY MEANS OF A MECHANICAL COMPACTOR BETWEEN LIFTS.
3. FROZEN MATERIALS OR SOFT, HIGHLY COMPRESSIBLE MATERIALS WILL NOT BE USED AS FILL.
4. FILL WILL NOT BE PLACED ON FROZEN SURFACE.
5. FILLING WILL BE COMPLETED AS A CONTINUOUS OPERATION.
6. AS SOON AS FINAL GRADES ARE ACHIEVED, THE AREAS WILL BE STABILIZED.
7. SEED & MULCH ALL DISTURBED AREAS IMMEDIATELY AFTER CONSTRUCTION.
8. CONTRACTOR MUST PROTECT ALL SURFACE WATER FROM SILTATION DURING CONSTRUCTION WITH APPROPRIATE MEASURES, INCLUDING BUT NOT LIMITED TO PLACING SILTATION FENCING AROUND THE WORK AREA.
9. ANY SOILS TRACKED OUT ONTO PUBLIC ROADS WILL BE SWEPT UP IMMEDIATELY.
10. A CONCRETE WASHOUT AREA MUST BE DUG BEFORE ANY POURING IS TO TAKE PLACE.
11. ANY PUMPING THAT IS TO BE DONE ON SITE MUST BE RUN THROUGH A FILTER AND/OR STONE.
12. A FINAL GRADING INSPECTION WILL HAVE TO BE CONDUCTED BEFORE COMPLETION OF CONSTRUCTION OR CERTIFICATE OF OCCUPANCY IS ISSUED.
13. ANY AND ALL EXPOSED SOILS MUST BE STABILIZED BEFORE COMPLETION OF CONSTRUCTION OR CERTIFICATE OF OCCUPANCY IS ISSUED.
14. ALL LAWN AREAS SHALL BE PLANTED BY HYDROSEEDING METHODS AND IF IT IS COMPLETED DURING THE WINTER IT SHALL BE PROTECTED WITH EROSION BLANKETS.
15. STABILIZED CONSTRUCTION ENTRANCE SHALL BE INSTALLED PRIOR TO ISSUANCE OF A BUILDING PERMIT.

## GENERAL EROSION & SEDIMENT CONTROL PLAN NOTES:

1. *LOCATIONS OF EROSION AND SEDIMENT CONTROL STRUCTURES ARE AS SHOWN ON THE EROSION AND SEDIMENT CONTROL PLAN.*
2. *ALL PROPOSED EROSION CONTROLS SHALL BE INSTALLED PRIOR TO BEGINNING OF CONSTRUCTION. FINAL LOCATION & CONSTRUCTION SHALL BE REVIEWED BY THE ENGINEER.*
3. *STAKEOUT OF ALL PROPOSED EROSION CONTROLS SHALL BE DONE BY A NEW YORK STATE LICENSED PROFESSIONAL SURVEYOR.*
4. *REMOVE EROSION CONTROLS ONLY UNDER THE AUTHORIZATION OF THE ENGINEER.*
5. *CONTRACTOR MUST PROTECT ALL SURFACE WATERS FROM SILTATION DURING CONSTRUCTION WITH APPROPRIATE MEASURES INCLUDING, BUT NOT LIMITED TO, PLACING STRAW BALES AND SILTATION FENCING AROUND WORK.*
6. *EROSION AND SEDIMENT CONTROL MEASURES SHOWN ON THIS PLAN ARE THE MINIMUM REQUIRED. ADDITIONAL MEASURES MAY BE REQUIRED DURING CONSTRUCTION AS DIRECTED BY THE ENGINEER.*
7. *EROSION AND SEDIMENT METHODS SHALL COMPLY WITH "THE NEW YORK GUIDELINES FOR URBAN AND SEDIMENT CONTROL" LATEST EDITION.*
8. *EROSION AND SEDIMENT CONTROL DEVICES SHALL BE INSPECTED PERIODICALLY AND AFTER EACH RAINFALL EVENT. THE CONTRACTOR SHALL REPAIR THE EROSION AND SEDIMENT CONTROL DEVICES AS NECESSARY AND AS DIRECTED BY THE ENGINEER.*
9. *ALL TEMPORARY EXPOSED FACES OF EARTH CUTS AND FILLS SHALL BE VEGETATED OR PROTECTED FROM EROSION IMMEDIATELY UPON COMPLETION OF EARTHWORK. PROVISIONS SHALL BE MADE IN ORDER TO MINIMIZE THE AREA TO BE DISTURBED AND PREVENTING WATER RUNOFF TO CONCENTRATE AND ERODE THE WORKED EARTH SLOPE.*
10. *UPON COMPLETION OF GRADING OPERATIONS THE WORKED AREAS SHALL BE STABILIZED BY THE FOLLOWING METHODS, DEPENDING UPON THE CLASSIFICATION OF THE AREA AS EITHER TO RECEIVE PERMANENT OR TEMPORARY SEEDING:*

   *SEED BED PREPARATION–*
   *IF AREAS ARE DEEMED AS REQUIRING TOPSOIL THAN APPLY TOPSOIL TO A UNIFORM MINIMUM DEPTH OF FOUR(4) INCHES. TOPSOIL SHALL BE FRIABLE AND LOAMY, FREE OF DEBRIS, OBJECTIONABLE WEEDS, AND STONES, AND CONTAIN NO TOXIC MATERIALS. IF TOPSOIL IS DEEMED UNNECESSARY THAN PREPARE SEED BED BY SCARIFYING COMPACTED AREAS AND REMOVING DEBRIS, ROCKS AND STUMPS. SEEDBED SHALL RECEIVE THE FOLLOWING SOIL AMENDMENTS:*
   *A) LIME TO A pH OF 6.0*
   *B) FERTILIZE WITH 600 LBS OF 5–10–10 OR EQUIVALENT PER ACRE (14 LBS./1000 SQ. FT)*

   *THE SOIL AMENDMENTS SHALL BE WORKED INTO THE SEED BED WITH A DISC, SPRINGTOOTH HARROW, OR OTHER SUITABLE EQUIPMENT.*
   *TEMPORARY SEEDINGS–*
   *ANNUAL RYE GRASS SEED SHALL BE APPLIED AT A RATE OF 0.9 LBS PER 1000 SQUARE FEET. USE WINTER RYE IF SEEDING DURING OCTOBER/NOVEMBER.*
   *PERMANENT SEEDINGS–*
   *SEEDINGS SHALL CONSIST OF 1 LB PER 1000 SQUARE FEET OF SEED CONTAINING AT LEAST 50% FAST SPROUTING PERENNIAL RYE GRASS AND 10% PINK CLOVER OR ALFALFA.*
   *THE SEED MIX SHALL BE SPREAD BY UTILIZING A CYCLONE SEEDER, DRILL, OR CULTIPACK SEEDER. SEED DEPTH SHALL BE FROM 1/4 TO 1/2 INCH DEEP. SEED MAY ALSO BE APPLIED BY APPROPRIATE HYDROSEEDING METHODS.*
   *ALL SEEDED AREAS SHALL BE MULCHED WITH STRAW MULCH APPLIED AT RATE OF 2 TON/ACRE (90 LBS PER 1000 SQUARE FEET) AND ANCHORED WITH "TERRA–TACK" OR EQUAL.*
11. *IF STABILIZATION BY SEEDING CANNOT OCCUR DURING THE RECOMMENDED SEEDING PERIODS, TOPSOIL, FILL, AND EXCAVATED MATERIALS AREAS SHALL BE TEMPORARILY STABILIZED WITH ANCHORED MULCH UNTIL SUCH TIME AS EFFECTIVE SEEDING CAN OCCUR.*
12. *STOCKPILE MATERIALS SHALL NOT BE LOCATED WITHIN 25 FEET OF ANY DITCH, STREAM, OR OTHER SURFACE WATER BODY.*
13. *IF CONSTRUCTION IS SUSPENDED, OR SECTIONS COMPLETED, AREAS SHALL BE SEEDED AND/OR MULCHED IMMEDIATELY.*

**APPLICANT:**

AB ACQUISITIONS, LLC
298 TROY SCHENECTADY RD.
LATHAM, N.Y. 12110

**OWNER:**

WEST AVENUE DEVELOPMENT ASSOCIATES, LLC
120 WEST AVENUE, SUITE 201
SARATOGA SPRINGS, N.Y. 12866

Dig Safely. New York
Call 811 before you dig

CITY OF SARATOGA SPRINGS

| NO. | REVISION | BY | APPD. | DATE |
|---|---|---|---|---|
| A | ISSUED FOR SKETCH PLAN REVIEW | R.D.D. | N.C. | 4-25-16 |
| B | ISSUED FOR SITE PLAN REVIEW | R.D.D. | N.C. | 9-9-16 |

© COPYRIGHT 2015
ADVANCE ENGINEERING & SURVEYING, PLLC
ALL RIGHTS RESERVED.
UNAUTHORIZED REPRODUCTION IS A VIOLATION OF APPLICABLE LAWS.

It is a violation of the Education Law of the State of New York for any person, unless acting under the direction of a Licensed Professional Engineer, to alter this document in any way.

Design of:
ADVANCE ENGINEERING & SURVEYING, PLLC
CONSULTING IN -
CIVIL & ENVIRONMENTAL ENGINEERING
LAND SURVEYING & DEVELOPMENT
COMMERCIAL AND RESIDENTIAL
11 HERBERT DRIVE, LATHAM, N.Y. 12110
PHONE: (518) 698-3772 E-MAIL: nicostape@gmail.com
NICHOLAS COSTA, P.E.

# EROSION CONTROL PLAN
# MIXED USE DEVELOPMENT

WEST AVENUE CITY OF SARATOGA SPRINGS
COUNTY OF SARATOGA NEW YORK

DATE: SEPTEMBER, 2016 SCALE: 1"= 20' SHEET 9 OF 9

SHEET NO.
ERO
10 OF 10 16046-SITE

October 27, 2016

Mark Torpey
Planning Board Chair
City of Saratoga Springs
City Hall
474 Broadway
Saratoga Springs, NY 12866

***SUBJECT: Mixed Use Development, 106-120 West Avenue***

Dear Mr. Torpey,

CDTA has reviewed plans for the above-referenced development. We appreciate the opportunity to provide comments on the site plan for the proposed mixed-use development at 106-120 West Avenue.

CDTA currently provides transit service within walking distance of this location via Route #451 (see route map and schedule attached). This route connects to the Saratoga Springs Amtrak station, Downtown Saratoga Springs, the Saratoga Race Course, the Town of Milton, and the Village of Ballston Spa.

CDTA strongly supports the following aspects of the developer's plan:

- The positioning of the building in front and parking in the rear of the site to provide street frontage and contribute to the walkability of West Avenue.
- The addition of a bicycle rack to the site.

In the interest of providing an even safer and more accessible pedestrian and transit-user environment, CDTA recommends that any driveways entering the site be constructed at the same level as the sidewalk to signal that pedestrians have the right of way. Any curb ramps that are constructed should also be ADA-compliant.

Thank you for including CDTA in the review process for this proposal.

Sincerely,

Michael Williams, Senior Planner
CDTA

CC: Kate Maynard, City of Saratoga Springs
Sandy Misciewicz, CDTC

**David M. Stackrow**
**Chairman**
**Rensselaer County**

**Georgeanna N. Lussier**
**Vice Chairwoman**
**Saratoga County**

**Joseph M. Spairana, Jr.**
**Secretary**
**Rensselaer County**

**Arthur F. Young, Jr.**
**Treasurer**
**Albany County**

**Corey L. Bixby**
**Labor Representative**

**Denise A. Figueroa**
**Albany County**

**Norman L. Miller**
**Schenectady County**

**Thomas M. Owens**
**Albany County**

**Carm Basile**
**Chief Executive Officer**

**CAPITAL DISTRICT TRANSPORTATION AUTHORITY**
**110 Watervliet Avenue Albany, N.Y. 12206**

**HANDWRITTEN APPLICATIONS WILL NOT BE ACCEPTED**

[FOR OFFICE USE]

(Application #)

(Date received)

# CITY OF SARATOGA SPRINGS

PLANNING BOARD

City Hall - 474 Broadway
Saratoga Springs, New York 12866-2296
Tel: 518-587-3550 fax: 518-580-9480
http://www.saratoga-springs.org

APPLICATION FOR:
**SITE PLAN REVIEW**
(INCLUDING PUD)

(Rev: 12/2015)

*****Application Check List - All submissions must include completed application check list and all required items.**

Project Name: Slack Chemical Company Expansion

Property Address/Location: 3 Unlimited Dr

Tax Parcel #: 178.00-1-50 Zoning District: IND-G
*(for example: 165.52-4-37)*

Proposed Use: Warehousing/Manufacturing

Date special use permit granted (if any): _____ Date zoning variance granted (if any): _____

Is property located within (check all that apply)?: ☐ Historic District ☐ Architectural Review District ☐ 500' of a State Park, city boundary, or county/state highway

| | APPLICANT(S)* | OWNER(S) *(If not applicant)* | ATTORNEY/AGENT |
|---|---|---|---|
| Name | Slack Chemical Co. | | Munter Enterprises, Inc. |
| Address | 21 Grande Blvd | | 881 Murray Rd |
| | Saratoga Springs, NY 12866 | | Middle Grove, NY 12850 |
| Phone | [redacted] | | [redacted] |
| Email | [redacted] | | |

Identify primary contact person: ☐ Applicant ☐ Owner ☑ Agent

* An applicant must be the property owner, lessee, or one with an option to lease or purchase the property in question.

Application Fee: A check for the total amount below payable to: "Commissioner of Finance" MUST accompany this application.

| | | | |
|---|---|---|---|
| ☐ | Sketch Plan - | $250 | $ _____ |
| ☑ | Final Site Plan Approval | | |
| | Residential - | $250 plus $150/unit | $ _____ |
| | Non-Residential - | $500 plus $100/1,000 SQ. FT. | $ 3490.00 |
| ☐ | Modification | | |
| | Residential - | $250 | $ _____ |
| | Non-Residential - | $500 | $ _____ |
| | | | **Total $** _____ |

Submission Deadline – Check City's website (www.saratoga-springs.org) for application deadlines and meeting dates.

Does any City officer, employee or family member thereof have a financial interest (as defined by General Municipal Law Section 809) in this application? YES ☐ NO ☑. If YES, a statement disclosing the name, residence, nature and extent of this interest must be filed with this application.

I, the undersigned owner, leasee or purchaser under contract for the property, hereby request Site Plan Review by the Planning Board for the identified property above. I agree to meet all requirements under Section 240-7.2 of the Zoning Ordinance of the City of Saratoga Springs.

Furthermore, I hereby authorize members of the Planning Board and designated City staff to enter the property associated with this application for purposes of conducting any necessary site inspections relating to this application.

Applicant Signature: Stuart Field Date: 10/19/2016

If applicant is not current owner, owner must also sign.

Owner Signature: Stuart Field POA for Bob Stortz Date: 10/19/2016

# CITY OF SARATOGA SPRINGS

PLANNING BOARD

City Hall - 474 Broadway
Saratoga Springs, New York 12866-2296
Tel: 518-587-3550 fax: 518-580-9480
http://www.saratoga-springs.org

[FOR OFFICE USE]

(Application #)

(Date received)

Rev.12/2015

## SITE PLAN REVIEW SUBMITTAL CHECKLIST

Project Name: Slack Chemical Co. Expansion

Listed below are the minimum submittal requirements for site plan review as set forth in The City of Saratoga Springs' Zoning Ordinance Appendix B. The Planning Board reserves the right to request additional information, as necessary, to support an application. The Board also reserves the right to reject the application if these minimum requirements are not met. Please complete the checklist below and provide with your submission.

**REQUIRED ITEMS: *3 hard copies and 1 digital copy of ALL materials are required.**

| CHECK EACH ITEM | ** HANDWRITTEN APPLICATIONS WILL NOT BE ACCEPTED** |
|---|---|
| ☑ | 1. Completed Site Plan Application (3 hard copies - *1 w/original signature - and 1 digital) and Fee |
| ☑ | 2. SEQR Environmental Assessment Form- short or long form as required by action. |
| ☑ | 3. Set of plans including: (3) large scale plans (sheets must be 24" x 36", drawn to a scale of not more than 1"=50 feet). One digital version of all submittal items (pdf) shall be provided. |
| ☑ | 4. Basic or Full Storm Water Pollution Prevention Plan as required per City Code Chapter 242. |
| ☐ | 5. Copy of signed DPW water connection agreement for all projects involving new water connections to the City system N/A |
| ☐ | 6. Engineering Report for Water and Sanitary N/A |
| ☐ | 7. Complete Streets Checklist N/A |
| ☑ | 8. Project Cost Estimate-Quantities of work items and estimate of costs |

## REQUIRED ITEMS ON SITE PLAN, AS APPLICABLE:

| | |
|---|---|
| ☑ | 1. Property line survey prepared by a licensed land surveyor. Site plan must reference such survey with all corners set and marked on plan. A copy of the original property survey must also be included. |
| ☑ | 2. North arrow and map scale |
| ☑ | 3. Parcel tax map number |
| ☑ | 4. Site location map |
| ☑ | 5. Site vicinity map (all features within 300 feet of property) |
| ☑ | 6. Identification of zoning district with corresponding area requirements |

| Yes | No | N/A | |
|---|---|---|---|
| ✓ | | | 7. Building setback lines, either listed or shown on plans. |
| ✓ | | | 8. Title block with project name; name and address of applicant; and name and address of property owner (if different) |
| ✓ | | | 9. Topography data tied to NGVD 1929 datum |
| ✓ | | | 10. Name of all adjacent property owners |
| ✓ | | | 11. Parcel street address (existing and any proposed postal addresses) |
| ✓ | | | 12. Identification of all existing or proposed easements, covenants or legal rights-of-way on this property |
| | | ✓ | 13. References to all prior variances or special use permits |
| ✓ | | | 14. Existing and proposed contours and spot grades (at 2 foot intervals) |
| ✓ | | | 15. Identification of all spoil or borrow areas |
| ✓ | | | 16. Identification of all watercourses, designated State wetlands, buffers, Federal wetlands, floodplains, rock outcroppings, etc. |
| ✓ | | | 17. Location of proposed storage |
| ✓ | | | 18. Identification of all existing or proposed sidewalks or pedestrian paths (show type, size and condition of existing sidewalks) |
| ✓ | | | 19. Location, design specifications and construction material for all proposed site improvements (drains, culverts, retaining walls, berms, fences, etc.) |
| ✓ | | | 20. Location and distance to fire hydrant |
| ✓ | | | 21. Location, size, and material of all existing and proposed utility services |
| ✓ | | | 22. Parking lot layout plan and identification of all loading areas (number all spaces) |
| ✓ | | | 23. Parking demand calculations |
| ✓ | | | 24. Identification of parking spaces and access points for physically impaired persons |
| ✓ | | | 25. Location and screening plan for dumpster or recycling bins |
| ✓ | | | 26. Location, design, type of construction and materials, proposed use and exterior dimensions of all buildings (existing and proposed) on site |
| ✓ | | | 27. Identification of storage of any potentially hazardous materials All inside |
| ✓ | | | 28. Planting plan identifying quantity, species and size of all proposed new plant materials. Label existing plant material to be retained or removed. |
| ✓ | | | 29. Lighting plan showing type, location and intensity of all existing and proposed exterior lighting fixtures |
| ✓ | | | 30. Erosion and sediment control plan – including designated concrete truck washout area |

Checklist prepared by: _____ Date: 10/23/16

*617.20*
*Appendix B*
*Short Environmental Assessment Form*

## Instructions for Completing

**Part 1 - Project Information. The applicant or project sponsor is responsible for the completion of Part 1.** Responses become part of the application for approval or funding, are subject to public review, and may be subject to further verification. Complete Part 1 based on information currently available. If additional research or investigation would be needed to fully respond to any item, please answer as thoroughly as possible based on current information.

Complete all items in Part 1. You may also provide any additional information which you believe will be needed by or useful to the lead agency; attach additional pages as necessary to supplement any item.

**Part 1 - Project and Sponsor Information**

Name of Action or Project:
SLACK CHEMICAL BUILIDING ADDITION

Project Location (describe, and attach a location map):
3 UNLIMITED DRIVE, GRANDE INDUSTRIAL PARK, SARATOGA SPRINGS, NY

Brief Description of Proposed Action:
29,900 SQUARE FOOT ADDITION TO EXISTING 26,100 SQUARE FOOT FACILITY. ADDITION INCLUDES ADDITIONAL TRUCK DOCKS AND SITEWORK TO PROVIDE TRUCK ACCESS TO THOSE DOCKS.

| Name of Applicant or Sponsor: | Telephone: [redacted] |
|---|---|
| SLACK CHEMICAL COMPANY | E-Mail: |

Address:
3 UNLIMITED DRIVE

| City/PO: | State: | Zip Code: |
|---|---|---|
| SARATOGA SPRINGS | NY | 12866 |

| | NO | YES |
|---|---|---|
| 1. Does the proposed action only involve the legislative adoption of a plan, local law, ordinance, administrative rule, or regulation? If Yes, attach a narrative description of the intent of the proposed action and the environmental resources that may be affected in the municipality and proceed to Part 2. If no, continue to question 2. | ☑ | ☐ |
| 2. Does the proposed action require a permit, approval or funding from any other governmental Agency? If Yes, list agency(s) name and permit or approval: NYSDEC - STORMWATER NOTICE OF INTENT | ☐ | ☑ |

3.a. Total acreage of the site of the proposed action? 6.2 acres
b. Total acreage to be physically disturbed? 2.8 acres
c. Total acreage (project site and any contiguous properties) owned or controlled by the applicant or project sponsor? 6.2 acres

4. Check all land uses that occur on, adjoining and near the proposed action.
☐ Urban ☐ Rural (non-agriculture) ☑ Industrial ☐ Commercial ☐ Residential (suburban)
☐ Forest ☐ Agriculture ☐ Aquatic ☐ Other (specify): _____
☐ Parkland

| | NO | YES | N/A |
|---|---|---|---|
| 5. Is the proposed action, | | | |
| a. A permitted use under the zoning regulations? | ☐ | ☑ | ☐ |
| b. Consistent with the adopted comprehensive plan? | ☐ | ☑ | ☐ |

| | NO | YES |
|---|---|---|
| 6. Is the proposed action consistent with the predominant character of the existing built or natural landscape? | ☐ | ☑ |
| 7. Is the site of the proposed action located in, or does it adjoin, a state listed Critical Environmental Area? If Yes, identify: _____ | ☑ | ☐ |
| 8. a. Will the proposed action result in a substantial increase in traffic above present levels? | ☑ | ☐ |
| b. Are public transportation service(s) available at or near the site of the proposed action? | ☑ | ☐ |
| c. Are any pedestrian accommodations or bicycle routes available on or near site of the proposed action? | ☑ | ☐ |
| 9. Does the proposed action meet or exceed the state energy code requirements? If the proposed action will exceed requirements, describe design features and technologies: _____ | ☐ | ☑ |
| 10. Will the proposed action connect to an existing public/private water supply? If No, describe method for providing potable water: _____ | ☐ | ☑ |
| 11. Will the proposed action connect to existing wastewater utilities? If No, describe method for providing wastewater treatment: _____ | ☐ | ☑ |
| 12. a. Does the site contain a structure that is listed on either the State or National Register of Historic Places? | ☑ | ☐ |
| b. Is the proposed action located in an archeological sensitive area? | ☑ | ☐ |
| 13. a. Does any portion of the site of the proposed action, or lands adjoining the proposed action, contain wetlands or other waterbodies regulated by a federal, state or local agency? | ☑ | ☐ |
| b. Would the proposed action physically alter, or encroach into, any existing wetland or waterbody? If Yes, identify the wetland or waterbody and extent of alterations in square feet or acres: _____ | ☑ | ☐ |

14. Identify the typical habitat types that occur on, or are likely to be found on the project site. Check all that apply:
☐ Shoreline ☑ Forest ☐ Agricultural/grasslands ☐ Early mid-successional
☐ Wetland ☐ Urban ☐ Suburban

| | NO | YES |
|---|---|---|
| 15. Does the site of the proposed action contain any species of animal, or associated habitats, listed by the State or Federal government as threatened or endangered? | ☑ | ☐ |
| 16. Is the project site located in the 100 year flood plain? | ☑ | ☐ |
| 17. Will the proposed action create storm water discharge, either from point or non-point sources? If Yes, a. Will storm water discharges flow to adjacent properties? ☑ NO ☐ YES | ☑ | ☐ |
| b. Will storm water discharges be directed to established conveyance systems (runoff and storm drains)? If Yes, briefly describe: ☑ NO ☐ YES _____ | | |

| | NO | YES |
|---|---|---|
| 18. Does the proposed action include construction or other activities that result in the impoundment of water or other liquids (e.g. retention pond, waste lagoon, dam)?<br>If Yes, explain purpose and size: | ✓ | |
| 19. Has the site of the proposed action or an adjoining property been the location of an active or closed solid waste management facility?<br>If Yes, describe: | ✓ | |
| 20. Has the site of the proposed action or an adjoining property been the subject of remediation (ongoing or completed) for hazardous waste?<br>If Yes, describe: | ✓ | |

**I AFFIRM THAT THE INFORMATION PROVIDED ABOVE IS TRUE AND ACCURATE TO THE BEST OF MY KNOWLEDGE**

Applicant/sponsor name: Slack Chemical Date: 10/24/16

Signature:

**Part 2 - Impact Assessment. The Lead Agency is responsible for the completion of Part 2.** Answer all of the following questions in Part 2 using the information contained in Part 1 and other materials submitted by the project sponsor or otherwise available to the reviewer. When answering the questions the reviewer should be guided by the concept "Have my responses been reasonable considering the scale and context of the proposed action?"

| | No, or small impact may occur | Moderate to large impact may occur |
|---|---|---|
| 1. Will the proposed action create a material conflict with an adopted land use plan or zoning regulations? | | |
| 2. Will the proposed action result in a change in the use or intensity of use of land? | | |
| 3. Will the proposed action impair the character or quality of the existing community? | | |
| 4. Will the proposed action have an impact on the environmental characteristics that caused the establishment of a Critical Environmental Area (CEA)? | | |
| 5. Will the proposed action result in an adverse change in the existing level of traffic or affect existing infrastructure for mass transit, biking or walkway? | | |
| 6. Will the proposed action cause an increase in the use of energy and it fails to incorporate reasonably available energy conservation or renewable energy opportunities? | | |
| 7. Will the proposed action impact existing:<br>a. public / private water supplies? | | |
| b. public / private wastewater treatment utilities? | | |
| 8. Will the proposed action impair the character or quality of important historic, archaeological, architectural or aesthetic resources? | | |
| 9. Will the proposed action result in an adverse change to natural resources (e.g., wetlands, waterbodies, groundwater, air quality, flora and fauna)? | | |

| | No, or small impact may occur | Moderate to large impact may occur |
|---|---|---|
| 10. Will the proposed action result in an increase in the potential for erosion, flooding or drainage problems? | ☐ | ☐ |
| 11. Will the proposed action create a hazard to environmental resources or human health? | ☐ | ☐ |

**Part 3 - Determination of significance. The Lead Agency is responsible for the completion of Part 3.** For every question in Part 2 that was answered "moderate to large impact may occur", or if there is a need to explain why a particular element of the proposed action may or will not result in a significant adverse environmental impact, please complete Part 3. Part 3 should, in sufficient detail, identify the impact, including any measures or design elements that have been included by the project sponsor to avoid or reduce impacts. Part 3 should also explain how the lead agency determined that the impact may or will not be significant. Each potential impact should be assessed considering its setting, probability of occurring, duration, irreversibility, geographic scope and magnitude. Also consider the potential for short-term, long-term and cumulative impacts.

☐ Check this box if you have determined, based on the information and analysis above, and any supporting documentation, that the proposed action may result in one or more potentially large or significant adverse impacts and an environmental impact statement is required.

☐ Check this box if you have determined, based on the information and analysis above, and any supporting documentation, that the proposed action will not result in any significant adverse environmental impacts.

| | |
|---|---|
| Name of Lead Agency | Date |
| Print or Type Name of Responsible Officer in Lead Agency | Title of Responsible Officer |
| Signature of Responsible Officer in Lead Agency | Signature of Preparer (if different from Responsible Officer) |

PRINT

# Slack Expansion

*Statement of Probable Construction Cost* *15-Oct-16*

| | | | | | |
|---|---|---|---|---|---|
| **Work within R.O.W.** | **0.00** | @ | 25% | | **0.00** |
| **Work on the Site** | **$ 161,687.00** | @ | 25% | **$** | **40,422** |

***Total Letter of Credit $ 40,422***

## No Work is Required within the R.O.W. for this Project

## Site Work

| *Item* | *Unit* | | | *Unit Price* | | *Cost* |
|---|---|---|---|---|---|---|
| ***Erosion Control*** | | | | | | |
| Sediment Control Fence | 1220 | lf | @ | $ 1.50 | = | $ 1,830.00 |
| Temporary Sediment Trap | 2 | ls | @ | $ 900.00 | = | $ 1,800.00 |
| ***Demolition and Site Clearing*** | | | | | | |
| Caution Flagging | 500 | lf | @ | $ 0.50 | = | $ 250.00 |
| Clearing and Grubbing | 1.5 | ac | @ | $ 2,000.00 | = | $ 3,000.00 |
| Strip Topsoil and Stockpile | 1540 | cy | @ | $ 3.00 | = | $ 4,620.00 |
| ***Excavation and Site Grading*** | | | | | | |
| Site Grading | 13,370 | sy | @ | $ 1.50 | = | $ 20,055.00 |
| Pavement Subbase Course | 75 | cy | @ | $ 12.00 | = | $ 900.00 |
| Spread Topsoil | 960 | cy | @ | $ 3.00 | = | $ 2,880.00 |
| ***Storm Drainage*** | | | | | | |
| Eave Trench | 3960 | sf | @ | $ 4.50 | = | $ 17,820.00 |
| Catch Basin | 2 | ea | @ | $ 600.00 | = | $ 1,200.00 |
| Drywell 8' x 8' | 7 | ea | @ | $ 1,500.00 | = | $ 10,500.00 |
| 12" HDPE | 64 | lf | @ | $ 23.00 | = | $ 1,472.00 |
| 8" Infiltration Pipe | 148 | lf | @ | $ 28.00 | = | $ 4,144.00 |
| ***Paving and Curbs*** | | | | | | |
| Segmental Retaining Wall | 415 | lf | @ | $ 56.00 | = | $ 23,240.00 |
| Stone Surface | 4200 | sy | @ | $ 13.00 | = | $ 54,600.00 |
| Asphalt Paving | 225 | sy | @ | $ 18.00 | = | $ 4,050.00 |
| ***Planting*** | | | | | | |
| Fine Grade and Seed | 5160 | sy | @ | $ 1.10 | = | $ 5,676.00 |
| Transplant Tree | 1 | ea | @ | $ 150.00 | = | $ 150.00 |
| ***Survey*** | | | | | | |
| As-Built Survey | 1 | ls | @ | $ 3,500.00 | = | $ 3,500.00 |
| | | | ***Total On-Site*** | | | ***$ 161,687.00*** |

# Slack Expansion

*Statement of Probable Construction Cost* *15-Oct-16*

| | | | | | |
|---|---|---|---|---|---|
| **Work within R.O.W.** | **0.00** | @ | 25% | | **0.00** |
| **Work on the Site** | **$ 161,687.00** | @ | 25% | **$** | **40,422** |

***Total Letter of Credit $ 40,422***

## No Work is Required within the R.O.W. for this Project

## Site Work

| *Item* | *Unit* | | | *Unit Price* | | *Cost* |
|---|---|---|---|---|---|---|
| ***Erosion Control*** | | | | | | |
| Sediment Control Fence | 1220 | lf | @ | $ 1.50 | = | $ 1,830.00 |
| Temporary Sediment Trap | 2 | ls | @ | $ 900.00 | = | $ 1,800.00 |
| ***Demolition and Site Clearing*** | | | | | | |
| Caution Flagging | 500 | lf | @ | $ 0.50 | = | $ 250.00 |
| Clearing and Grubbing | 1.5 | ac | @ | $ 2,000.00 | = | $ 3,000.00 |
| Strip Topsoil and Stockpile | 1540 | cy | @ | $ 3.00 | = | $ 4,620.00 |
| ***Excavation and Site Grading*** | | | | | | |
| Site Grading | 13,370 | sy | @ | $ 1.50 | = | $ 20,055.00 |
| Pavement Subbase Course | 75 | cy | @ | $ 12.00 | = | $ 900.00 |
| Spread Topsoil | 960 | cy | @ | $ 3.00 | = | $ 2,880.00 |
| ***Storm Drainage*** | | | | | | |
| Eave Trench | 3960 | sf | @ | $ 4.50 | = | $ 17,820.00 |
| Catch Basin | 2 | ea | @ | $ 600.00 | = | $ 1,200.00 |
| Drywell 8' x 8' | 7 | ea | @ | $ 1,500.00 | = | $ 10,500.00 |
| 12" HDPE | 64 | lf | @ | $ 23.00 | = | $ 1,472.00 |
| 8" Infiltration Pipe | 148 | lf | @ | $ 28.00 | = | $ 4,144.00 |
| ***Paving and Curbs*** | | | | | | |
| Segmental Retaining Wall | 415 | lf | @ | $ 56.00 | = | $ 23,240.00 |
| Stone Surface | 4200 | sy | @ | $ 13.00 | = | $ 54,600.00 |
| Asphalt Paving | 225 | sy | @ | $ 18.00 | = | $ 4,050.00 |
| ***Planting*** | | | | | | |
| Fine Grade and Seed | 5160 | sy | @ | $ 1.10 | = | $ 5,676.00 |
| Transplant Tree | 1 | ea | @ | $ 150.00 | = | $ 150.00 |
| ***Survey*** | | | | | | |
| As-Built Survey | 1 | ls | @ | $ 3,500.00 | = | $ 3,500.00 |
| | | | | ***Total On-Site*** | | ***$ 161,687.00*** |

# Slack Expansion

***Statement of Probable Construction Cost*** ***15-Oct-16***

| | | | | | |
|---|---|---|---|---|---|
| **Work within R.O.W.** | **0.00** | @ | 25% | | **0.00** |
| **Work on the Site** | **$ 161,687.00** | @ | 25% | **$** | **40,422** |

***Total Letter of Credit $ 40,422***

## No Work is Required within the R.O.W. for this Project

## Site Work

| *Item* | *Unit* | | | *Unit Price* | | *Cost* |
|---|---|---|---|---|---|---|
| ***Erosion Control*** | | | | | | |
| Sediment Control Fence | 1220 | lf | @ | $ 1.50 | = | $ 1,830.00 |
| Temporary Sediment Trap | 2 | ls | @ | $ 900.00 | = | $ 1,800.00 |
| ***Demolition and Site Clearing*** | | | | | | |
| Caution Flagging | 500 | lf | @ | $ 0.50 | = | $ 250.00 |
| Clearing and Grubbing | 1.5 | ac | @ | $ 2,000.00 | = | $ 3,000.00 |
| Strip Topsoil and Stockpile | 1540 | cy | @ | $ 3.00 | = | $ 4,620.00 |
| ***Excavation and Site Grading*** | | | | | | |
| Site Grading | 13,370 | sy | @ | $ 1.50 | = | $ 20,055.00 |
| Pavement Subbase Course | 75 | cy | @ | $ 12.00 | = | $ 900.00 |
| Spread Topsoil | 960 | cy | @ | $ 3.00 | = | $ 2,880.00 |
| ***Storm Drainage*** | | | | | | |
| Eave Trench | 3960 | sf | @ | $ 4.50 | = | $ 17,820.00 |
| Catch Basin | 2 | ea | @ | $ 600.00 | = | $ 1,200.00 |
| Drywell 8' x 8' | 7 | ea | @ | $ 1,500.00 | = | $ 10,500.00 |
| 12" HDPE | 64 | lf | @ | $ 23.00 | = | $ 1,472.00 |
| 8" Infiltration Pipe | 148 | lf | @ | $ 28.00 | = | $ 4,144.00 |
| ***Paving and Curbs*** | | | | | | |
| Segmental Retaining Wall | 415 | lf | @ | $ 56.00 | = | $ 23,240.00 |
| Stone Surface | 4200 | sy | @ | $ 13.00 | = | $ 54,600.00 |
| Asphalt Paving | 225 | sy | @ | $ 18.00 | = | $ 4,050.00 |
| ***Planting*** | | | | | | |
| Fine Grade and Seed | 5160 | sy | @ | $ 1.10 | = | $ 5,676.00 |
| Transplant Tree | 1 | ea | @ | $ 150.00 | = | $ 150.00 |
| ***Survey*** | | | | | | |
| As-Built Survey | 1 | ls | @ | $ 3,500.00 | = | $ 3,500.00 |
| | | | ***Total On-Site*** | | | ***$ 161,687.00*** |

# Slack Expansion

***Statement of Probable Construction Cost*** ***15-Oct-16***

| | | | | | |
|---|---|---|---|---|---|
| **Work within R.O.W.** | **0.00** | @ | 25% | | **0.00** |
| **Work on the Site** | **$ 161,687.00** | @ | 25% | **$** | **40,422** |

***Total Letter of Credit $ 40,422***

## No Work is Required within the R.O.W. for this Project

## Site Work

| *Item* | *Unit* | | | *Unit Price* | | *Cost* |
|---|---|---|---|---|---|---|
| ***Erosion Control*** | | | | | | |
| Sediment Control Fence | 1220 | lf | @ | $ 1.50 | = | $ 1,830.00 |
| Temporary Sediment Trap | 2 | ls | @ | $ 900.00 | = | $ 1,800.00 |
| ***Demolition and Site Clearing*** | | | | | | |
| Caution Flagging | 500 | lf | @ | $ 0.50 | = | $ 250.00 |
| Clearing and Grubbing | 1.5 | ac | @ | $ 2,000.00 | = | $ 3,000.00 |
| Strip Topsoil and Stockpile | 1540 | cy | @ | $ 3.00 | = | $ 4,620.00 |
| ***Excavation and Site Grading*** | | | | | | |
| Site Grading | 13,370 | sy | @ | $ 1.50 | = | $ 20,055.00 |
| Pavement Subbase Course | 75 | cy | @ | $ 12.00 | = | $ 900.00 |
| Spread Topsoil | 960 | cy | @ | $ 3.00 | = | $ 2,880.00 |
| ***Storm Drainage*** | | | | | | |
| Eave Trench | 3960 | sf | @ | $ 4.50 | = | $ 17,820.00 |
| Catch Basin | 2 | ea | @ | $ 600.00 | = | $ 1,200.00 |
| Drywell 8' x 8' | 7 | ea | @ | $ 1,500.00 | = | $ 10,500.00 |
| 12" HDPE | 64 | lf | @ | $ 23.00 | = | $ 1,472.00 |
| 8" Infiltration Pipe | 148 | lf | @ | $ 28.00 | = | $ 4,144.00 |
| ***Paving and Curbs*** | | | | | | |
| Segmental Retaining Wall | 415 | lf | @ | $ 56.00 | = | $ 23,240.00 |
| Stone Surface | 4200 | sy | @ | $ 13.00 | = | $ 54,600.00 |
| Asphalt Paving | 225 | sy | @ | $ 18.00 | = | $ 4,050.00 |
| ***Planting*** | | | | | | |
| Fine Grade and Seed | 5160 | sy | @ | $ 1.10 | = | $ 5,676.00 |
| Transplant Tree | 1 | ea | @ | $ 150.00 | = | $ 150.00 |
| ***Survey*** | | | | | | |
| As-Built Survey | 1 | ls | @ | $ 3,500.00 | = | $ 3,500.00 |
| | | | ***Total On-Site*** | | | ***$ 161,687.00*** |

# STORMWATER MANAGEMENT REPORT
# and
# STORMWATER POLLUTION PREVENTION PLAN NARATIVE
# for

# SLACK CHEMICAL COMPANY, INC.

# PROPOSED EXPANSION

City of Saratoga
Saratoga County, New York
**Planning Board #16.--**


Prepared by: NACE ENGINEERING, P.C.
169 HAVILAND ROAD
QUEENSBURY, NY 12804

Thomas W. Nace, P.E.

October 24, 2016
File: #47618

# STORMWATER MANAGEMENT REPORT
# MUNTER ENTERPRISES
# SLACK CHEMICAL COMPANY – PROPOSED EXPANSION

## Site Location

The project site is a currently developed lot in the eastern portion of W.J. Grande Industrial Park, on the northeast side of Unlimited Drive. The 6.9 acre lot is owned by Slack Chemical Company and was developed two years ago.

## Existing Conditions

Current development of the site includes office space, manufacturing space and warehouse space totaling 26,120 sq. ft. The existing building was positioned on the site so that expansion of the building could occur on both the east and west sides of the existing building. The area of the proposed additions is currently wooded.

The USDA Soil Survey of Saratoga County shows the soils to be Windsor, loamy sands (hydrologic soils group A), with rapid percolation and groundwater deeper than 6 feet (see attached USDA soils map). Soil testing done for the adjacent Unlimited Potential and SCA Tissue sites showed medium sands to a depth of 5 to 7 feet underlain by coarse sand. No indication of seasonal high water table was evident to a depth of over 8 feet. Percolation rates were slightly less than one minute. Additionally, excavations for the existing Slack Chemical building verified the soils to be well drained coarse sand to a depth of 12+ feet.

The existing site and drainage patterns are shown on the Existing Conditions Plan.

Existing Conditions Summary:

| | | | |
|---|---|---|---|
| Parcel Area: | 6.92 acres | | |
| Building & Pavement Coverage: | 1.52 acres | – | 21.9 % |
| Pervious Surface: | 5.40 acres | = | 78.1 % |

## Proposed Development

The proposed project consists of additions on the east and west sides of the existing building totaling 29,900 sq. ft. The project also includes truck docks on the north side of the additions and modification of the existing truck access drive to provide access to the docks.

The proposed project will result in the following lot coverage:

Proposed Conditions Summary

| | | | |
|---|---|---|---|
| Parcel Area: | 6.92 acres | | |
| Building & Pavement Coverage: | 2.76 acres | = | 39.9 % |
| Pervious Surface: | 5.45 acres | = | 60.1 % |

The proposed development will result in an increase of impervious surface of 18.0%

**Construction Phasing**
The project will be constructed in a single phase.

**Green Infrastructure Practices and Requirements**
As stated in the *New York State Stormwater Management Design Manual*, Section 3.2 – *Green Infrastructure for Stormwater Management* "The objective is to replicate pre-development hydrology by maintaining pre-construction infiltration, peak runoff flow, discharge volume, as well as minimizing concentrated flow by using runoff control techniques to provide treatment in a distributed manner before runoff reaches the collection system".

Due to the highly permeable nature of the existing site soil, there is the opportunity to use infiltration practices for runoff from all portions of the developed site.

Specific Green Infrastructure Practice goals are being addressed as follows:

Planning Practices for Preservation of Natural Features and Conservation

*Preservation of undisturbed areas* - This project is located in an industrial park which is substantially developed. However, a substantial natural buffer across the east and west sides of the site will remain undisturbed to preserve the natural woodland. Within the developed portion of the site a large area of existing trees will be maintained between the building and the truck assess road to the rear of the building.

*Reduction of clearing and grading* – parking and site circulation roads kept to a minimum.

*Locating development in less sensitive areas* – all planned development has been located in the center of the site, retaining natural buffers around the perimeter. There are no environmentally sensitive areas within or adjacent to the site.

*Open space design* – as previously stated, wide perimeter buffers are being maintained.

*Soil restoration* – Existing soil on the site is very permeable. Soil restoration will be required only on lawn areas which have been compacted as a result of construction activities.

Planning Practices for Reduction of Impervious Cover

*Sidewalk reduction* – Sidewalk length has been kept to a minimum required for access.

*Driveway reduction* – Driveway length has been dictated by the necessity for truck and emergency vehicle access to the building.

*Building footprint reduction* – nature of project is not conducive to multi-story building.

*Parking reduction* – parking dictated by code requirement.

Green Infrastructure Techniques

*Rain Gardens* – mainly used for residential development, rain gardens are generally not appropriate for larger commercial or industrial projects.

*Green Roofs* – Green roofs are very expensive to construct and maintain. Additionally, they are only marginally suitable for cold climates. They were not considered for this project because better alternatives were available.

*Stormwater Planters* – Generally used for small areas of pavement, stormwater planters were not considered for this project due to the size of the hard surfaces to be accommodated.

*Rain Barrels* – Like stormwater planters, rain barrels are generally used for small roof areas unless there is a great need for the collected water. Additionally, they are generally unsuitable for cold climates.

*Porous Pavement* – On this project, porous pavement would only be considered appropriate for the parking lot. However, it is not in general use in this area and the special asphalt mixes and placement requirements, as well as maintenance requirements have ruled it out for this project.

**Proposed Stormwater Management**

To the maximum extent possible drainage patterns and facilities established and constructed with the initial site development will be maintained.

All runoff from existing and proposed development will be handled by infiltration into the sandy, well drained soils on the site.

Runoff from the building roof will be handled by 6 foot wide by 4 foot deep, stone filled eave trenches along the front and sides of the building.

Runoff from the entrance drive and parking lot on the south side of the building will remain as is, handled by an infiltration swale which overflows into a drywell.

Runoff from the truck entrance drive, loading dock area and remainder of the developed site will be directed to two depressions located in the rear of the site. The depressions will provide pretreatment and sediment collection. The eastern most depression will include two drywells located so that their inlets are 6" above the bottom of the depression. The western most depression will include a catch basin located so that its inlet is located 6" above the bottom of the depression. The outfall of the catch basin will be piped to a series of four drywells which are interconnected with infiltration/equalization trenches.

**Calculations**

For analysis purposes the project is broken into three stormwater management areas:

- Building roof (subcatchments #1, 2 & 3)

- Western rear portion of lot (subcatchment #4)
- Eastern rear portion of lot (subcatchment #5).
- South portion of lot (subcatchment #6)

Stormwater Management Worksheets for each of these stormwater management areas (SMA) are included in the appendices. These provide the calculations for Water Quality Volume (WQv), minimum Runoff Reduction Volume (RRv) required, and RRv provided. These calculations are summarized as follows:

**Water Quality Control**

The Water Quality Volume (WQv) as defined by P x Rv x A / 12 represents the anticipated runoff from the developed site during a 90% rainfall event. In accordance with the *New York State Stormwater Management Design Manual*, the WQv must be treated either through green infrastructure practices or through standard WQv treatment practices such as ponds and wetlands. The following table summarizes the required WQv and the provided WQv for each stormwater management area as derived in the Stormwater Management Worksheets in the appendices. (note that the WQv required is equal to the WQv provided because all runoff from the 90% storm -1" rainfall – is being infiltrated in the proposed infiltration facilities)

Required WQv

| Stormwater Management Area | WQv Required (cf) | WQv Provided (cf) |
|---|---|---|
| Building roof | 4,966 | 4,966 |
| Rear west | 3,179 | 3,179 |
| Rear east | 1,231 | 1,231 |
| South | 935 | 935 |

Pretreatment is required prior to infiltration facilities. Since the native soils are in hydrologic soil group A, 100% of the WQv runoff must receive treatment. Pretreatment for the infiltration trenches and drywells is provided by a combination of grass filter strips adjacent to the paved surfaces and shallow grass swales conveying the runoff to the infiltration facilities.

Pretreatment

| Stormwater Management Area | Contributing WQv (cf) | Required % Treatment | Required Treatment (cf) | Pretreatment Type | Pretreatment Provided (cf) |
|---|---|---|---|---|---|
| Rear west | 3,180 | 100% | 3,180 | Filter Strip / Grass Swale | 3,180 |
| Rear east | 1,231 | 100% | 1,231 | Filter Strip / Grass Swale | 1,231 |
| South | 935 | 100% | 935 | Filter Strip / Grass Swale | 935 |

**Runoff Reduction**

The *New York State Stormwater Management Design Manual* requires that Area Reduction, Impervious Disconnection and Source Control Practices be utilized to achieve a Runoff Reduction Volume RRv that, if possible, equals the Water Quality Volume WQv. At a minimum, RRv must

meet a minimum value which is a % of WQv dependent on the hydrologic soil group. The complete RRv calculations for each stormwater management areas are provided in the Stormwater Management Worksheets included in the appendices. A summary of the results are provided in the table below.

Runoff Reduction Volumes

| Stormwater Management Area | WQv (cf) | Min. RRv (cf) | RRv Provided (cf) | RRv % WQv |
|---|---|---|---|---|
| Building roof | 4,966 | 2,731 | 4,902 | 99% |
| Rear west | 3,180 | 1,669 | 5,131 | 307% |
| Rear east | 1,231 | 626 | 1,736 | 141% |
| south | 935 | 474 | 1,272 | 136% |

**HydroCAD Analysis**

HydroCAD stormwater modeling software has been used to analyze the pre and post development stormwater runoff from the site. The developed site has been modeled as a series of subcatchments (discrete drainage areas), reaches and ponds as shown on the attached HydroCAD drainage diagram. As in the WQv and RRv analysis, the site has been divided into three stormwater management areas. All calculations are based upon the following:

- All computations SCS TR-20, HydroCAD
- 1 year, 24 hour storm - Type II rainfall = 2.2"
- 10 year, 24 hour storm - Type II rainfall = 3.8"
- 100 year, 24 hour storm - Type II rainfall = 6.4"
- Soils – Winsor Sands – hydrologic soil group A, infiltration rate = 60 in/hr
- Design infiltration rate = 45 in/hr (inc. safety factor of 1.5) for the drywells, infiltration swale and eave trenches.

The attached HydroCAD calculations show the stormwater routing for the site and results for each of the subcatchments and ponds.

**Channel Protection Volume**

Channel protection is required by the DEC Stormwater Management Design Manual. This requires 24 hour extended detention of the 1 year 24 hour storm which is obviously meet since all of the 1-year storm is infiltrated. The HydroCAD analysis of the developed site shows that the Channel Protection Volume (CPv) is as presented in the table below:

Required Channel Protection Volume

| Stormwater Management Area | CPv Required (cf) | Detention Volume Provided (cf) |
|---|---|---|
| Building roof | 9,627 | 9,627 |
| Rear west | 1,699 | 1,699 |
| Rear east | 348 | 348 |
| South | 218 | 218 |

**Overbank Flood Control**

Overbank flood control is required by the DEC Stormwater Management Design Manual. The overbank flood control requires that the peak discharge rate from the 10 year 24 hour storm be

reduced to pre-development rates. This requirement is obviously met since all of the 10-year storm is infilterated. HydroCAD analysis shows the pre and post development discharges from each Stormwater Management Area to be as follows:

Overbank Flood Control

| Stormwater Management Area | Predeveloped 10 yr storm (cfs) | Postdeveloped 10 yr storm (cfs) |
|---|---|---|
| Building roof | 0 | 0 |
| Rear west | 0 | 0 |
| Rear east | 0 | 0 |
| South | 0 | 0 |

**Extreme Storm Control**

Extreme storm control is required by the DEC Stormwater Management Design Manual. The extreme storm control requires that the peak discharge from the 100 year storm be reduced to pre-development rates. HydroCAD analysis shows the pre and post development discharges from each Stormwater Management Area to be as follows:

Extreme Storm Control

| Stormwater Management Area | Predeveloped 100 yr storm (cfs) | Postdeveloped 100 yr storm (cfs) |
|---|---|---|
| Building roof | 0 | 0 |
| Rear west | 0 | 0 |
| Rear east | 0 | 0 |
| South | 0 | 0 |

**Conclusions**

The proposed stormwater management systems will contain and infiltrate all runoff, up through a 100-year storm. As shown in the calculations they meet all of the green infrastructure requirements as well as the water quality and peak discharge requirements.

**Historical Places or Archaeological Resources**

The proposed project will not adversely affect any properties listed or eligible to be listed on the National Register of Historic Places; nor will it affect any properties mapped as archaeologically sensitive by OPRHP. A copy of the OPRHP sensitivity map was submitted with the original project.

**Temporary Erosion and Sediment Control Measures**

Erosion and sediment control measures will be incorporated into the construction of the project. These practices will comply with the New York State Department of Environmental Conservation publication entitled "New York Guidelines for Urban Erosion and Sediment Control" (the blue book).

Separate erosion and sediment controls will be installed for each phase of construction. The following temporary erosion and sediment control devices will be utilized as shown on the Sediment and Erosion Control Plans.

Sediment Control Fence: Silt fence shall be used to control erosion from sheet flow on slopes not to exceed 3 on 1. Concentrated flows shall not be directed toward the silt fence. The silt fence must be installed parallel to the contour lines to eliminate drainage along the fence.

Temporary Seeding: Land that is stripped of vegetation will be seeded and planted as soon as possible. Any area that will remain cleared but not under construction for 10 days or longer will be seeded with a ryegrass mixture and mulched to stabilize soil until construction resumes.

Temporary Silt Basin: A Temporary Silt Basins shall be constructed at low points outside of the pavement area and discharge clean stormwater into the drainage swale which shall be protected from sedimentation.

Temporary Diversion Swales: Temporary diversion swales shall be constructed as required, either to divert clean stormwater runoff from newly graded areas or to direct sediment laden runoff to a sediment trapping device.

Stabilized Construction Entrance: Existing roads will be protected by installation of a crushed stone blanket for cleaning construction vehicle wheels. Blankets shall be placed at any intersection of a construction road with a paved or publicly owned road. Stabilized construction entrances shall be installed as shown on the plans.

Tree Protection: Trees to be preserved within areas of construction shall be protected by placing construction fencing around the drip lines. Construction workers will be directed to avoid storing equipment or soil under trees to be preserved. There shall be no parking of automobiles or construction vehicles under trees.

Dust Control: Measures for dust control during construction shall be implemented as needed (daily water sprays will be used during dry conditions. In addition to water sprays, temporary mulching, temporary seeding and covering stockpiles with tarps shall be implemented when necessary.

Rock Check Dam: Small stone check dams shall be constructed in any temporary drainage channels during construction. These dams shall be constructed in the locations shown on the plans and as

necessary to control any drainage from the construction site which concentrates in flow paths or channels. Dams shall be constructed as detailed on the Erosion and Sediment Control Plan. Dams shall be cleaned of any sediment after each rainfall as needed.

**Control of Litter, Construction Debris and Construction Chemicals**
During the course of infrastructure and home construction, the site shall be kept clear of debris and litter which could be transported by water or wind. This material shall be picked up daily and shall be stored in waste debris containers where it is securely held.

All petroleum products or other waste contaminants which are water soluble or could be dispersed and transported by stormwater shall be stored in covered containers and be regularly removed from the site and properly and legally disposed of. All petroleum or other hazardous materials shall be stored and handled in conformance with NYSDEC spill prevention and containment requirements.

**Sequence of Construction**
Construction sequencing is specified in detail on the Erosion and Sediment Control Plans.

**Maintenance of Temporary Erosion and Sediment Control Devices**
The sediment basins shall be inspected at least weekly and after every rain event by the Contractor. When 50% of the volume of the trap is full, The Contractor shall remove collected sediment and dispose of properly.

The Contractor shall inspect the sediment control fence weekly and after every rain event and remove trapped sediment and maintain the devices in good working order.

**Permanent Erosion Control**
All pervious areas shall be graded, topsoil installed and seeded or planted as soon as practical. Seed beds shall be mulched with straw or hydro-mulch with tackifier and plant beds shall be mulched with pine bark mulch. Seeded areas on slopes over 3:1 shall be stabilized with erosion control netting as specified on the plans.

**Post-Construction Operation and Maintenance of Stormwater Control Devices**
All portions of the stormwater control system shall be inspected on a periodic basis and shall be cleaned and/or repaired as appropriate.

- Roadside infiltration swales - Inspect and clean fall and spring; mow twice per year.
- Eave trenches - Inspect and clean surface fall and spring
- Infiltration basins / depressions - Inspect and remove leaves fall and spring.
- Drywells - Inspect and clean grates monthly; inspect and clean inside biannually.

Keep maintenance records showing dates and descriptions of all inspections and maintenance.

# Appendix

- **Stormwater Management Worksheets**
- **Drainage Area Maps**
- **HydroCAD Drainage Diagram**
- **Post Developed Conditions – 1 Year Design Storm**
- **Post Developed Conditions – 10 Year Design Storm**
- **Post Developed Conditions – 100 Year Design Storm**

# STORMWATER MANAGEMENT WORKSHEETS

## *STORMWATER MANAGEMENT WORKSHEET*

---

## *SLACK CHEMOICAL - ROOF STORMWATER MANAGEMENT AREA*

Project: 47618- Slack Addition roof management area  Date: 10/21/2016

Watershed Drainage Area  Soils:

DA: 1.44 (acres)  HSG(s): A  90% Rain (P): 1 (inches)

### WATER QUALITY VOLUME (before runoff reduction)

Rv = 0.05 + 0.009(I) where I is % Impervious Cover: Rv minimum = 0.2

I = Percent Impervious Cover

A = Area of Site In Acres (Contributing Area)

1. ***Water Quality Volume (WQv) = P•A•Rv/12***

DA= 1.44  AI*= 1.44 acres  Rv= 0.9500

I = 100  Applied Rv = 0.9500

| | | |
|---|---|---|
| **Original WQv=** | **0.1140** | **ac-ft** |
| | **4965.84** | **cf** |

**If soil restoration is not practiced, include construction compacted areas as impervious.*

2. ***Minimum RRv Requirements*** *(when 100% WQv reduction cannot be achieved):* ***RRv = P x 0.95 x S x AI / 12***

with S= 0.55 (A soils) 0.40 (B soils) 0.30 (C soils) 0.20 (D soils) OR weighted HSG average in DA

P= 1 inches  S= 0.55  AI= 1.44 acres

| | | |
|---|---|---|
| **Min. RRv required=** | **0.0627** | **ac-ft** |
| | **2731.21** | **cf** |

### AREA REDUCTION PRACTICES

3. ***Area Reduction Practices (complete for all applicable practices): (area includes practice and contributing area)***

- Conservation of natural areas: (contributing AI = 0.00 ac.)  Area = 0.00 ac.
- Riparian buffers/filter strips: (contributing AI = ____ ac.)  Area = ____ ac.
- Tree planting/tree preservation: (contributing AI = ____ ac.)  Area = ____ ac.
- Total area reduction:  Total Area Reduced = 0.00 ac.
- Total impervious area within area reduction:  AI in Reduced Area = 0.00 ac.

4. ***Subtract total area reduction from DA:***

**Remaining Drainage Area =** 1.44 ac.

**Remaining AI =** 1.44 ac.

5. ***Recalculate WQv for site area remaining after area reductions:***

Remaining DA = 1.44  Remaining AI = 1.44 ac.  Rv = 0.9500

I = 100.00

| | | |
|---|---|---|
| **Area Reduced WQv =** | **0.1140** | **ac-ft** |
| | **4965.84** | **cf** |

6. ***Runoff reduction volume (RRv) = original WQv - area reduced WQv***

| | | |
|---|---|---|
| **RRv =** | **0.0000** | **ac-ft** |
| | **0** | **cf -** |

## *STORMWATER MANAGEMENT WORKSHEET*

---

## *SLACK CHEMOICAL - ROOF STORMWATER MANAGEMENT AREA*

### IMPERVIOUS DISCONNECTION

7. ***Impervious Area Disconnection:***

Total disconnected impervious area (now considered pervious for RV calculation(s)) — Area = 0.00 ac.

8. ***Recalculate WQv with RV modified for impervious disconnection:***

DA = 1.44 ac. Remaining AI 1.44 ac. Rv = 0.95 — Imperv. Disc. Reduced WQv = 0.1140 ac-ft; 4965.84 cf

I = 100.00

9. ***Runoff reduction volume = area reduced WQv - Rv reduced WQv*** — RRv = 0.0000 ac-ft; 0 cf

### SOURCE CONTROL WQv TREATMENT PRACTICES (from attached worksheet)

**10a.** Subtotal DA tributary to Source Control treatment practices = 1.440 acres

**10b.** Subtotal Source Control WQv Treatment Volume = 0.114 ac-ft

**10c.** Subtotal Runoff Reduction Volume (RRv): — **Subtotal (Rv) RRv = 0.103 ac-ft; 4469.26 cf**

**10d.** Subtotal AI = 1.4400

### TOTAL RUNOFF REDUCTION VOLUME (RRv)

11. ***Total drainage area treated with runoff reduction/source control practices =*** 1.44 acres

(Area reduction (#3) + total DA tributary to source control (#10a))

12. ***Total impervious area (AI) treated with area reduction or source control RRv =*** 1.44 ac-ft

(AI #3 + AI #7 + AI # 10d)

13. ***Total RRv provided (#6 + #9 + #10c) = Total (RRv) =*** — **Total Provided RRv = 0.1026 ac-ft; 4469.256 cf**

14. ***Is Total Provided RRv ≥ Original WQv?*** Yes ✓ No _____ If yes, skip to #19

15. ***Is Total Provided RRv ≥ Minimum RRv?*** Yes ✓ No _____ If no, provide additional RRv and recalculate

## *STORMWATER MANAGEMENT WORKSHEET*

---

## *SLACK CHEMICAL- NORTHWEST MANAGEMENT AREA*

Project: 47618- Slack Addition northrear west management area Date: 10/21/2016

Watershed Drainage Area: Soils:

DA: 1.68 (acres) HSG(s): A 90% Rain (P): 1 (inches)

### WATER QUALITY VOLUME (before runoff reduction)

Rv = 0.05 + 0.009(I) where I is % Impervious Cover: Rv minimum = 0.2

I = Percent Impervious Cover

A = Area of Site In Acres (Contributing Area)

1. ***Water Quality Volume (WQv) = P•A•Rv/12***

DA= 1.68 AI*= 0.88 acres Rv= 0.5214

I = 52.381 Applied Rv = 0.5214

| | | |
|---|---|---|
| **Original WQv=** | **0.0730** | **ac-ft** |
| | **3179.88** | **cf** |

**If soil restoration is not practiced, include construction compacted areas as impervious.*

2. ***Minimum RRv Requirements*** *(when 100% WQv reduction cannot be achieved).* ***RRv = P x 0.95 x S x AI / 12***

with S= 0.55 (A soils) 0.40 (B soils) 0.30 (C soils) 0.20 (D soils) OR weighted HSG average in DA

P= 1 inches S= 0.55 AI= 0.88 acres

| | | |
|---|---|---|
| **Min. RRv required=** | **0.0383** | **ac-ft** |
| | **1669.07** | **cf** |

### AREA REDUCTION PRACTICES

3. ***Area Reduction Practices (complete for all applicable practices): (area includes practice and contributing area)***

- Conservation of natural areas: (contributing AI = 0.00 ac.) Area = 0.00 ac.
- Riparian buffers/filter strips: (contributing AI = ac.) Area = ac.
- Tree planting/tree preservation: (contributing AI = ac.) Area = ac.
- Total area reduction: Total Area Reduced = 0.00 ac.
- Total impervious area within area reduction: AI in Reduced Area = 0.00 ac.

4. ***Subtract total area reduction from DA:***

**Remaining Drainage Area =** 1.68 ac.

**Remaining AI =** 0.88 ac.

5. ***Recalculate WQv for site area remaining after area reductions:***

Remaining DA = 1.68 Remaining AI = 0.88 ac. Rv = 0.5214

I = 52.38

| | | |
|---|---|---|
| **Area Reduced WQv =** | **0.0730** | **ac-ft** |
| | **3179.88** | **cf** |

6. ***Runoff reduction volume (RRv) = original WQv - area reduced WQv***

| | | |
|---|---|---|
| **RRv =** | **0.0000** | **ac-ft** |
| | **0** | **cf** |

## *STORMWATER MANAGEMENT WORKSHEET*

---

## *SLACK CHEMICAL- NORTHWEST MANAGEMENT AREA*

### IMPERVIOUS DISCONNECTION

7. ***Impervious Area Disconnection:***

   Total disconnected impervious area (now considered pervious for RV calculation(s)) — Area = 0.00 ac.

8. ***Recalculate WQv with RV modified for impervious disconnection:***

   DA = 1.68 ac. Remaining AI 0.88 ac. Rv = 0.52143

   I = 52.38

   Imperv. Disc. Reduced WQv = 0.0730 ac-ft
   3179.88 cf

9. ***Runoff reduction volume = area reduced WQv - Rv reduced WQv***

   **RRv = 0.0000 ac-ft**
   0 cf

### SOURCE CONTROL WQv TREATMENT PRACTICES (from attached worksheet)

**10a.** Subtotal DA tributary to Source Control treatment practices = 1.680 acres

**10b.** Subtotal Source Control WQv Treatment Volume = 0.073 ac-ft

**10c.** Subtotal Runoff Reduction Volume (RRv):

**10d.** Subtotal AI = 0.8800

**Subtotal (Rv) RRv = 0.066 ac-ft**
**2861.89 cf**

### TOTAL RUNOFF REDUCTION VOLUME (RRv)

11. ***Total drainage area treated with runoff reduction/source control practices =*** 1.68 acres

    (Area reduction (#3) + total DA tributary to source control (#10a))

12. ***Total impervious area (AI) treated with area reduction or source control RRv =*** 0.88 ac-ft

    (AI #3 + AI #7 + AI # 10d)

13. ***Total RRv provided (#6 + #9 + #10c) = Total (RRv) =***

    **Total Provided RRv = 0.0657 ac-ft**
    **2861.892 cf**

14. ***Is Total Provided RRv ≥ Original WQv?*** Yes ✓ No _____ If yes, skip to #19

15. ***Is Total Provided RRv ≥ Minimum RRv?*** Yes ✓ No _____ If no, provide additional RRv and recalculate

STORMWATER MANAGEMENT WORKSHEET

---

SLACK CHEMICAL - NORTHEAST MANAGEMENT AREA

Project: 47618- Slack Addition northeast management area Date: 10/21/2016

Watershed Drainage Area: Soils:

DA: 0.84 (acres) HSG(s): A 90% Rain (P): 1 (inches)

## WATER QUALITY VOLUME (before runoff reduction)

Rv = 0.05 + 0.009(I) where I is % Impervious Cover: Rv minimum = 0.2

I = Percent Impervious Cover

A = Area of Site In Acres (Contributing Area)

1. ***Water Quality Volume (WQv) = P•A•Rv/12***

DA= 0.84 AI*= 0.33 acres Rv= 0.4036

I = 39.2857 Applied Rv = 0.4036

| | | |
|---|---|---|
| **Original WQv=** | **0.0283** | **ac-ft** |
| | **1230.57** | **cf** |

**If soil restoration is not practiced, include construction compacted areas as impervious.*

2. ***Minimum RRv Requirements*** *(when 100% WQv reduction cannot be achieved):* ***RRv = P x 0.95 x S x AI / 12***

with S= 0.55 (A soils) 0.40 (B soils) 0.30 (C soils) 0.20 (D soils) OR weighted HSG average in DA

P= 1 inches S= 0.55 AI= 0.33 acres

| | | |
|---|---|---|
| **Min. RRv required=** | **0.0144** | **ac-ft** |
| | **625.90** | **cf** |

## AREA REDUCTION PRACTICES

3. ***Area Reduction Practices (complete for all applicable practices): (area includes practice and contributing area)***

- Conservation of natural areas: (contributing AI = 0.00 ac.) Area = 0.00 ac.
- Riparian buffers/filter strips: (contributing AI = ____ ac.) Area = ____ ac.
- Tree planting/tree preservation: (contributing AI = ____ ac.) Area = ____ ac.
- Total area reduction: Total Area Reduced = 0.00 ac.
- Total impervious area within area reduction: AI in Reduced Area = 0.00 ac.

4. ***Subtract total area reduction from DA:***

**Remaining Drainage Area =** 0.84 ac.

**Remaining AI =** 0.33 ac.

5. ***Recalculate WQv for site area remaining after area reductions:***

Remaining DA = 0.84 Remaining AI = 0.33 ac. Rv = 0.4036

I = 39.29

| | | |
|---|---|---|
| **Area Reduced WQv =** | **0.0283** | **ac-ft** |
| | **1230.57** | **cf** |

6. ***Runoff reduction volume (RRv) = original WQv - area reduced WQv***

| | | |
|---|---|---|
| **RRv =** | **0.0000** | **ac-ft** |
| | **0** | **cf** |

STORMWATER MANAGEMENT WORKSHEET

---

SLACK CHEMICAL - NORTHEAST MANAGEMENT AREA

## IMPERVIOUS DISCONNECTION

7. ***Impervious Area Disconnection:***

Total disconnected impervious area (now considered pervious for RV calculation(s)) — Area = 0.64 ac.

8. ***Recalculate WQv with RV modified for impervious disconnection:***

DA = 0.84 ac. Remaining AI -0.31 ac. Rv = -0.2821

I = -36.90

Imperv. Disc. Reduced WQv = -0.0198 ac-ft

-860.31 cf

9. ***Runoff reduction volume = area reduced WQv - Rv reduced WQv***

**RRv = 0.0480 ac-ft**

2090.88 cf

## SOURCE CONTROL WQv TREATMENT PRACTICES (from attached worksheet)

**10a.** Subtotal DA tributary to Source Control treatment practices = 0.840 acres

**10b.** Subtotal Source Control WQv Treatment Volume = 0.028 ac-ft

**10c.** Subtotal Runoff Reduction Volume (RRv):

**10d.** Subtotal AI = 0.3300

**Subtotal (Rv) RRv = 0.025 ac-ft**

**1107.51 cf**

## TOTAL RUNOFF REDUCTION VOLUME (RRv)

11. ***Total drainage area treated with runoff reduction/source control practices =*** 0.84 acres

(Area reduction (#3) + total DA tributary to source control (#10a))

12. ***Total impervious area (AI) treated with area reduction or source control RRv =*** 0.97 ac-ft

(AI #3 + AI #7 + AI # 10d)

13. ***Total RRv provided (#6 + #9 + #10c) = Total (RRv) =***

**Total Provided RRv = 0.0734 ac-ft**

**3198.393 cf**

14. ***Is Total Provided RRv ≥ Original WQv?*** Yes ✓ No _____ If yes, skip to #19

15. ***Is Total Provided RRv ≥ Minimum RRv?*** Yes ✓ No _____ If no, provide additional RRv and recalculate

## *STORMWATER MANAGEMENT WORKSHEET*
## ---
## *SLACK CHEMICAL - SOUTH MANAGEMENT AREA*

Project: 47618- Slack Addition south management area  Date: 10/21/2016

Watershed Drainage Area:  Soils:

DA: 0.65 (acres)  HSG(s): A  90% Rain (P): 1 (inches)

### WATER QUALITY VOLUME (before runoff reduction)

Rv = 0.05 + 0.009(I) where I is % Impervious Cover: Rv minimum = 0.2

I = Percent Impervious Cover

A = Area of Site In Acres (Contributing Area)

1. ***Water Quality Volume (WQv) = P•A•Rv/12***

DA= 0.65  AI*= 0.25 acres  Rv= 0.3962

I = 38.4615  Applied Rv = 0.3962

| | | |
|---|---|---|
| **Original WQv=** | **0.0215** | **ac-ft** |
| | **934.73** | **cf** |

**If soil restoration is not practiced, include construction compacted areas as impervious.*

2. ***Minimum RRv Requirements*** *(when 100% WQv reduction cannot be achieved):* ***RRv = P x 0.95 x S x AI / 12***

with S= 0.55 (A soils) 0.40 (B soils) 0.30 (C soils) 0.20 (D soils) OR weighted HSG average in DA

P= 1 inches  S= 0.55  AI= 0.25 acres

| | | |
|---|---|---|
| **Min. RRv required=** | **0.0109** | **ac-ft** |
| | **474.17** | **cf** |

### AREA REDUCTION PRACTICES

3. ***Area Reduction Practices (complete for all applicable practices): (area includes practice and contributing area)***

- Conservation of natural areas: (contributing AI = 0.00 ac.)  Area = 0.00 ac.
- Riparian buffers/filter strips: (contributing AI = ____ ac.)  Area = ____ ac.
- Tree planting/tree preservation: (contributing AI = ____ ac.)  Area = ____ ac.
- Total area reduction:  Total Area Reduced = 0.00 ac.
- Total impervious area within area reduction:  AI in Reduced Area = 0.00 ac.

4. ***Subtract total area reduction from DA:***

**Remaining Drainage Area =** 0.65 ac.

**Remaining AI =** 0.25 ac.

5. ***Recalculate WQv for site area remaining after area reductions:***

Remaining DA = 0.65  Remaining AI = 0.25 ac.  Rv = 0.3962

I = 38.46

| | | |
|---|---|---|
| **Area Reduced WQv =** | **0.0215** | **ac-ft** |
| | **934.725** | **cf** |

6. ***Runoff reduction volume (RRv) = original WQv - area reduced WQv***

| | | |
|---|---|---|
| **RRv =** | **0.0000** | **ac-ft** |
| | **0** | **cf** |

*STORMWATER MANAGEMENT WORKSHEET*

---

*SLACK CHEMICAL - SOUTH MANAGEMENT AREA*

## IMPERVIOUS DISCONNECTION

7. ***Impervious Area Disconnection:***

   Total disconnected impervious area (now considered pervious for RV calculation(s)) — Area = 0.00 ac.

8. ***Recalculate WQv with RV modified for impervious disconnection:***

   DA = 0.65 ac. Remaining AI 0.25 ac. Rv = 0.39615

   I = 38.46

   Imperv. Disc. Reduced WQv = 0.0215 ac-ft; 934.725 cf

9. ***Runoff reduction volume = area reduced WQv - Rv reduced WQv***

   **RRv = 0.0000 ac-ft**; 0 cf

## SOURCE CONTROL WQv TREATMENT PRACTICES (from attached worksheet)

**10a.** Subtotal DA tributary to Source Control treatment practices = 0.650 acres

**10b.** Subtotal Source Control WQv Treatment Volume = 0.021 ac-ft

**10c.** Subtotal Runoff Reduction Volume (RRv):

**10d.** Subtotal AI = 0.2500

**Subtotal (Rv) RRv = 0.019 ac-ft**; **841.25 cf**

## TOTAL RUNOFF REDUCTION VOLUME (RRv)

11. ***Total drainage area treated with runoff reduction/source control practices =*** 0.65 acres

    (Area reduction (#3) + total DA tributary to source control (#10a))

12. ***Total impervious area (AI) treated with area reduction or source control RRv =*** 0.25 ac-ft

    (AI #3 + AI #7 + AI # 10d)

13. ***Total RRv provided (#6 + #9 + #10c) = Total (RRv) =***

    **Total Provided RRv = 0.0193 ac-ft**; **841.2525 cf**

14. ***Is Total Provided RRv ≥ Original WQv?*** Yes ✓ No _____ If yes, skip to #19

15. ***Is Total Provided RRv ≥ Minimum RRv?*** Yes ✓ No _____ If no, provide additional RRv and recalculate

# DRAINAGE AREA MAP

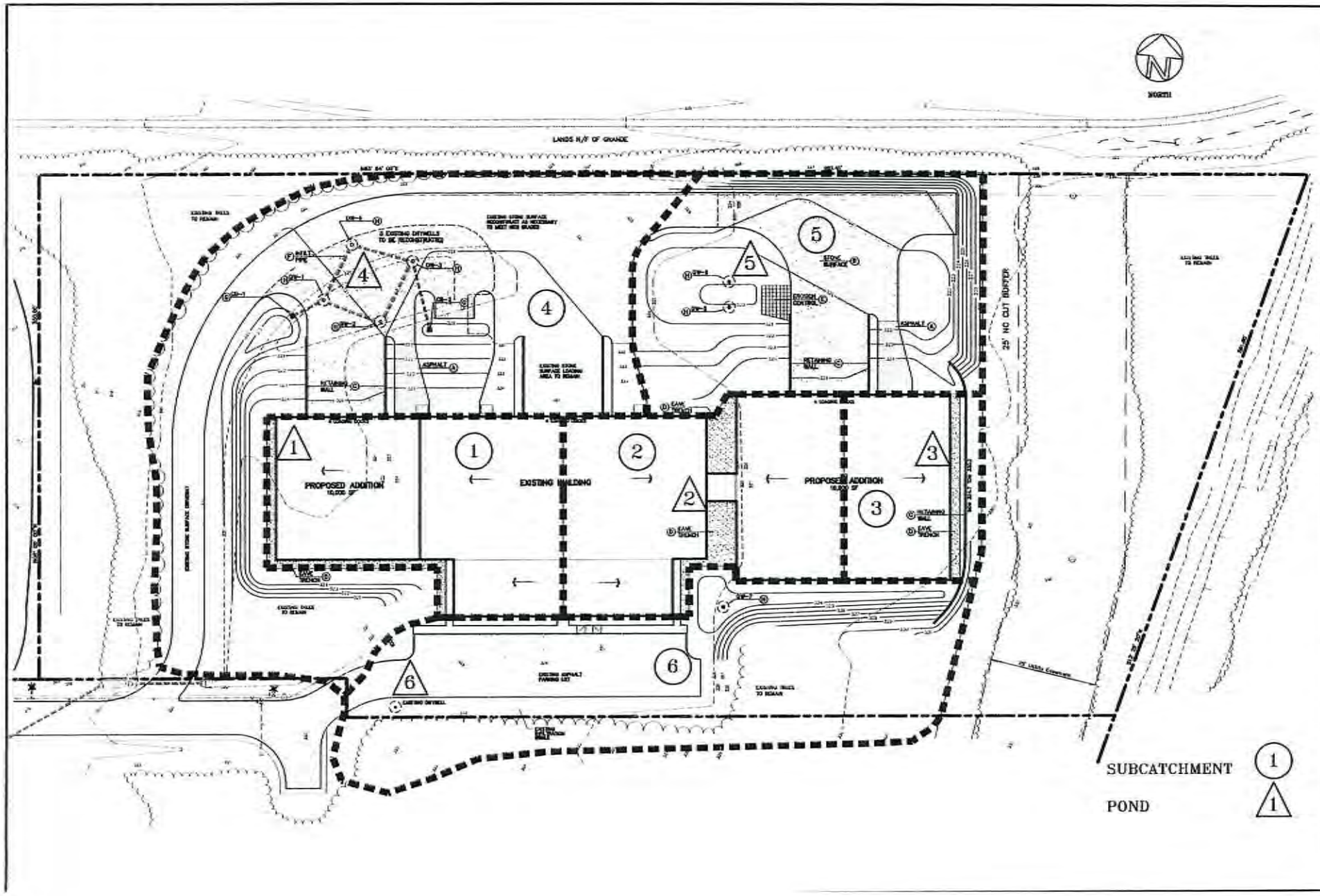


# DRAINAGE REPORT
## PROPOSED CONDITIONS

JOB #47816 SCALE: 1" = 80' DATE: 10/18/2016

# SLACK CHEMICAL COMPANY ADDITION

MUNTER ENTERPRISES

2 UNLIMITED DRIVE, SARATOGA SPRINGS, NY

NACE ENGINEERING,P.C.
169 HAVILAND ROAD
QUEENSBURY, NY

# HydroCAD DRAINAGE DIAGRAM

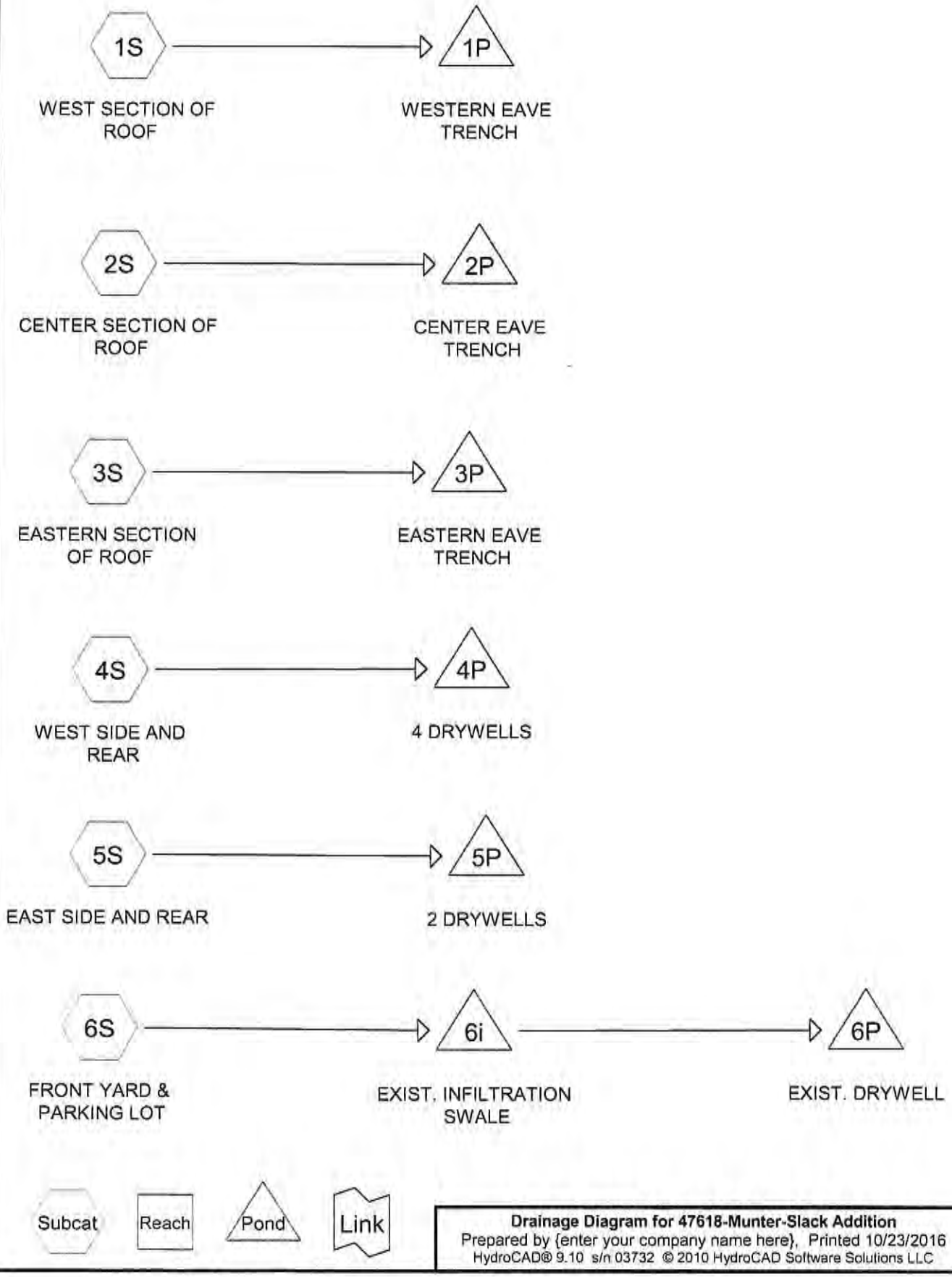


**Drainage Diagram for 47618-Munter-Slack Addition**
Prepared by {enter your company name here}, Printed 10/23/2016
HydroCAD® 9.10 s/n 03732 © 2010 HydroCAD Software Solutions LLC

# HydroCAD RESULTS

# POST DEVELOPED CONDITIONS
# 1-YEAR DESIGN STORM

Time span=5.00-20.00 hrs, dt=0.05 hrs, 301 points
Runoff by SCS TR-20 method, UH=SCS
Reach routing by Stor-Ind+Trans method - Pond routing by Stor-Ind method

**Subcatchment 1S: WEST SECTION OF** Runoff Area=24,693 sf 100.00% Impervious Runoff Depth>1.84"
Flow Length=190' Slope=0.0420 '/' Tc=1.7 min CN=98 Runoff=1.87 cfs 0.087 af

**Subcatchment 2S: CENTER SECTION OF** Runoff Area=25,563 sf 100.00% Impervious Runoff Depth>1.84"
Flow Length=100' Slope=0.0420 '/' Tc=1.0 min CN=98 Runoff=2.00 cfs 0.090 af

**Subcatchment 3S: EASTERN SECTION** Runoff Area=12,494 sf 100.00% Impervious Runoff Depth>1.84"
Flow Length=100' Slope=0.0420 '/' Tc=1.0 min CN=98 Runoff=0.98 cfs 0.044 af

**Subcatchment 4S: WEST SIDE AND REAR** Runoff Area=73,395 sf 52.52% Impervious Runoff Depth>0.28"
Flow Length=264' Tc=4.2 min CN=70 Runoff=0.82 cfs 0.039 af

**Subcatchment 5S: EAST SIDE AND REAR** Runoff Area=36,490 sf 39.44% Impervious Runoff Depth>0.11"
Flow Length=340' Tc=5.2 min CN=62 Runoff=0.06 cfs 0.008 af

**Subcatchment 6S: FRONT YARD &** Runoff Area=28,445 sf 37.78% Impervious Runoff Depth>0.09"
Flow Length=60' Slope=0.0300 '/' Tc=0.8 min CN=61 Runoff=0.04 cfs 0.005 af

**Pond 1P: WESTERN EAVE TRENCH** Peak Elev=0.17' Storage=100 cf Inflow=1.87 cfs 0.087 af
Discarded=1.52 cfs 0.087 af Primary=0.00 cfs 0.000 af Outflow=1.52 cfs 0.087 af

**Pond 2P: CENTER EAVE TRENCH** Peak Elev=0.03' Storage=30 cf Inflow=2.00 cfs 0.090 af
Discarded=1.97 cfs 0.090 af Primary=0.00 cfs 0.000 af Outflow=1.97 cfs 0.090 af

**Pond 3P: EASTERN EAVE TRENCH** Peak Elev=0.11' Storage=35 cf Inflow=0.98 cfs 0.044 af
Discarded=0.86 cfs 0.044 af Primary=0.00 cfs 0.000 af Outflow=0.86 cfs 0.044 af

**Pond 4P: 4 DRYWELLS** Peak Elev=0.87' Storage=129 cf Inflow=0.82 cfs 0.039 af
Outflow=0.50 cfs 0.039 af

**Pond 5P: 2 DRYWELLS** Peak Elev=0.04' Storage=2 cf Inflow=0.06 cfs 0.008 af
Outflow=0.06 cfs 0.007 af

**Pond 6i: EXIST. INFILTRATION SWALE** Peak Elev=0.00' Storage=1 cf Inflow=0.04 cfs 0.005 af
Discarded=0.04 cfs 0.005 af Primary=0.00 cfs 0.000 af Outflow=0.04 cfs 0.005 af

**Pond 6P: EXIST. DRYWELL** Peak Elev=0.00' Storage=0 cf Inflow=0.00 cfs 0.000 af
Outflow=0.00 cfs 0.000 af

**Total Runoff Area = 4.616 ac Runoff Volume = 0.272 af Average Runoff Depth = 0.71"**
**37.12% Pervious = 1.714 ac 62.88% Impervious = 2.903 ac**

## Summary for Subcatchment 1S: WEST SECTION OF ROOF

Runoff = 1.87 cfs @ 11.91 hrs, Volume= 0.087 af, Depth> 1.84"

Runoff by SCS TR-20 method, UH=SCS, Time Span= 5.00-20.00 hrs, dt= 0.05 hrs
Type II 24-hr 1-YEAR Rainfall=2.20"

| | Area (sf) | CN | Description |
|---|---|---|---|
| * | 24,693 | 98 | ROOF + EAVE TRENCH |
| | 24,693 | | 100.00% Impervious Area |

| Tc (min) | Length (feet) | Slope (ft/ft) | Velocity (ft/sec) | Capacity (cfs) | Description |
|---|---|---|---|---|---|
| 1.7 | 190 | 0.0420 | 1.82 | | **Sheet Flow, ACROSS ROOF TO EAVE** Smooth surfaces n= 0.011 P2= 2.40" |

## Summary for Subcatchment 2S: CENTER SECTION OF ROOF

Runoff = 2.00 cfs @ 11.90 hrs, Volume= 0.090 af, Depth> 1.84"

Runoff by SCS TR-20 method, UH=SCS, Time Span= 5.00-20.00 hrs, dt= 0.05 hrs
Type II 24-hr 1-YEAR Rainfall=2.20"

| | Area (sf) | CN | Description |
|---|---|---|---|
| * | 25,563 | 98 | ROOF + EAVE TRENCH |
| | 25,563 | | 100.00% Impervious Area |

| Tc (min) | Length (feet) | Slope (ft/ft) | Velocity (ft/sec) | Capacity (cfs) | Description |
|---|---|---|---|---|---|
| 1.0 | 100 | 0.0420 | 1.60 | | **Sheet Flow, ACROSS ROOF TO EAVE** Smooth surfaces n= 0.011 P2= 2.40" |

## Summary for Subcatchment 3S: EASTERN SECTION OF ROOF

Runoff = 0.98 cfs @ 11.90 hrs, Volume= 0.044 af, Depth> 1.84"

Runoff by SCS TR-20 method, UH=SCS, Time Span= 5.00-20.00 hrs, dt= 0.05 hrs
Type II 24-hr 1-YEAR Rainfall=2.20"

| | Area (sf) | CN | Description |
|---|---|---|---|
| * | 12,494 | 98 | ROOF + EAVE TRENCH |
| | 12,494 | | 100.00% Impervious Area |

| Tc (min) | Length (feet) | Slope (ft/ft) | Velocity (ft/sec) | Capacity (cfs) | Description |
|---|---|---|---|---|---|
| 1.0 | 100 | 0.0420 | 1.60 | | **Sheet Flow, ACROSS ROOF TO EAVE** Smooth surfaces n= 0.011 P2= 2.40" |

## Summary for Subcatchment 4S: WEST SIDE AND REAR

Runoff = 0.82 cfs @ 11.97 hrs, Volume= 0.039 af, Depth> 0.28"

Runoff by SCS TR-20 method, UH=SCS, Time Span= 5.00-20.00 hrs, dt= 0.05 hrs
Type II 24-hr 1-YEAR Rainfall=2.20"

| | Area (sf) | CN | Description |
|---|---|---|---|
| * | 38,544 | 98 | PAVEMENT |
| | 34,851 | 39 | >75% Grass cover, Good, HSG A |
| | 73,395 | 70 | Weighted Average |
| | 34,851 | | 47.48% Pervious Area |
| | 38,544 | | 52.52% Impervious Area |

| Tc (min) | Length (feet) | Slope (ft/ft) | Velocity (ft/sec) | Capacity (cfs) | Description |
|---|---|---|---|---|---|
| 0.4 | 24 | 0.0200 | 0.90 | | **Sheet Flow, ACROSS PAVEMENT TO SWALE** Smooth surfaces n= 0.011 P2= 2.40" |
| 3.8 | 240 | 0.0050 | 1.06 | | **Shallow Concentrated Flow, SHALLOW SWALE TO CB** Grassed Waterway Kv= 15.0 fps |
| 4.2 | 264 | Total | | | |

## Summary for Subcatchment 5S: EAST SIDE AND REAR

Runoff = 0.06 cfs @ 12.02 hrs, Volume= 0.008 af, Depth> 0.11"

Runoff by SCS TR-20 method, UH=SCS, Time Span= 5.00-20.00 hrs, dt= 0.05 hrs
Type II 24-hr 1-YEAR Rainfall=2.20"

| | Area (sf) | CN | Description |
|---|---|---|---|
| * | 14,393 | 98 | PAVEMENT |
| | 22,097 | 39 | >75% Grass cover, Good, HSG A |
| | 36,490 | 62 | Weighted Average |
| | 22,097 | | 60.56% Pervious Area |
| | 14,393 | | 39.44% Impervious Area |

| Tc (min) | Length (feet) | Slope (ft/ft) | Velocity (ft/sec) | Capacity (cfs) | Description |
|---|---|---|---|---|---|
| 1.4 | 100 | 0.0200 | 1.19 | | **Sheet Flow, ACROSS PAVEMENT TO SWALE** Smooth surfaces n= 0.011 P2= 2.40" |
| 3.8 | 240 | 0.0050 | 1.06 | | **Shallow Concentrated Flow, SHALLOW SWALE TO CB** Grassed Waterway Kv= 15.0 fps |
| 5.2 | 340 | Total | | | |

## Summary for Subcatchment 6S: FRONT YARD & PARKING LOT

Runoff = 0.04 cfs @ 11.97 hrs, Volume= 0.005 af, Depth> 0.09"

Runoff by SCS TR-20 method, UH=SCS, Time Span= 5.00-20.00 hrs, dt= 0.05 hrs
Type II 24-hr 1-YEAR Rainfall=2.20"

| | Area (sf) | CN | Description |
|---|---|---|---|
| * | 10,746 | 98 | PAVEMENT & SIDEWALK |
| | 17,699 | 39 | >75% Grass cover, Good, HSG A |
| | 28,445 | 61 | Weighted Average |
| | 17,699 | | 62.22% Pervious Area |
| | 10,746 | | 37.78% Impervious Area |

| Tc (min) | Length (feet) | Slope (ft/ft) | Velocity (ft/sec) | Capacity (cfs) | Description |
|---|---|---|---|---|---|
| 0.8 | 60 | 0.0300 | 1.26 | | **Sheet Flow, ACROSS PAVEMENT TO SWALE** Smooth surfaces n= 0.011 P2= 2.40" |

## Summary for Pond 1P: WESTERN EAVE TRENCH

Inflow Area = 0.567 ac,100.00% Impervious, Inflow Depth > 1.84" for 1-YEAR event
Inflow = 1.87 cfs @ 11.91 hrs, Volume= 0.087 af
Outflow = 1.52 cfs @ 11.95 hrs, Volume= 0.087 af, Atten= 19%, Lag= 2.4 min
Discarded = 1.52 cfs @ 11.95 hrs, Volume= 0.087 af
Primary = 0.00 cfs @ 5.00 hrs, Volume= 0.000 af

Routing by Stor-Ind method, Time Span= 5.00-20.00 hrs, dt= 0.05 hrs
Peak Elev= 0.17' @ 11.95 hrs Surf.Area= 1,433 sf Storage= 100 cf

Plug-Flow detention time= (not calculated: outflow precedes inflow)
Center-of-Mass det. time= 0.3 min ( 734.4 - 734.1 )

| Volume | Invert | Avail.Storage | Storage Description |
|---|---|---|---|
| #1 | 0.00' | 2,294 cf | **Custom Stage Data (Conic)** Listed below (Recalc) 5,734 cf Overall x 40.0% Voids |

| Elevation (feet) | Surf.Area (sq-ft) | Inc.Store (cubic-feet) | Cum.Store (cubic-feet) | Wet.Area (sq-ft) |
|---|---|---|---|---|
| 0.00 | 1,433 | 0 | 0 | 1,433 |
| 4.00 | 1,434 | 5,734 | 5,734 | 1,970 |

| Device | Routing | Invert | Outlet Devices |
|---|---|---|---|
| #1 | Discarded | 0.00' | **45.000 in/hr Exfiltration over Wetted area** |
| #2 | Primary | 3.90' | **170.0' long x 10.0' breadth Broad-Crested Rectangular Weir** Head (feet) 0.20 0.40 0.60 0.80 1.00 1.20 1.40 1.60 Coef. (English) 2.49 2.56 2.70 2.69 2.68 2.69 2.67 2.64 |

**Discarded OutFlow** Max=1.52 cfs @ 11.95 hrs HW=0.17' (Free Discharge)
└─**1=Exfiltration** (Exfiltration Controls 1.52 cfs)

**Primary OutFlow** Max=0.00 cfs @ 5.00 hrs HW=0.00' (Free Discharge)
└─**2=Broad-Crested Rectangular Weir** ( Controls 0.00 cfs)

## Summary for Pond 2P: CENTER EAVE TRENCH

| | | | | |
|---|---|---|---|---|
| Inflow Area = | 0.587 ac,100.00% Impervious, Inflow Depth > 1.84" for 1-YEAR event | | | |
| Inflow = | 2.00 cfs @ | 11.90 hrs, Volume= | 0.090 af | |
| Outflow = | 1.97 cfs @ | 11.90 hrs, Volume= | 0.090 af, | Atten= 2%, Lag= 0.2 min |
| Discarded = | 1.97 cfs @ | 11.90 hrs, Volume= | 0.090 af | |
| Primary = | 0.00 cfs @ | 5.00 hrs, Volume= | 0.000 af | |

Routing by Stor-Ind method, Time Span= 5.00-20.00 hrs, dt= 0.05 hrs
Peak Elev= 0.03' @ 11.90 hrs Surf.Area= 2,153 sf Storage= 30 cf

Plug-Flow detention time= 0.3 min calculated for 0.090 af (100% of inflow)
Center-of-Mass det. time= 0.2 min ( 733.8 - 733.6 )

| Volume | Invert | Avail.Storage | Storage Description |
|---|---|---|---|
| #1 | 0.00' | 3,446 cf | **Custom Stage Data (Conic)** Listed below (Recalc)<br>8,614 cf Overall x 40.0% Voids |

| Elevation (feet) | Surf.Area (sq-ft) | Inc.Store (cubic-feet) | Cum.Store (cubic-feet) | Wet.Area (sq-ft) |
|---|---|---|---|---|
| 0.00 | 2,153 | 0 | 0 | 2,153 |
| 4.00 | 2,154 | 8,614 | 8,614 | 2,811 |

| Device | Routing | Invert | Outlet Devices |
|---|---|---|---|
| #1 | Discarded | 0.00' | **45.000 in/hr Exfiltration over Wetted area** |
| #2 | Primary | 3.90' | **170.0' long x 10.0' breadth Broad-Crested Rectangular Weir**<br>Head (feet) 0.20 0.40 0.60 0.80 1.00 1.20 1.40 1.60<br>Coef. (English) 2.49 2.56 2.70 2.69 2.68 2.69 2.67 2.64 |

**Discarded OutFlow** Max=2.25 cfs @ 11.90 hrs HW=0.03' (Free Discharge)
└─**1=Exfiltration** (Exfiltration Controls 2.25 cfs)

**Primary OutFlow** Max=0.00 cfs @ 5.00 hrs HW=0.00' (Free Discharge)
└─**2=Broad-Crested Rectangular Weir** ( Controls 0.00 cfs)

## Summary for Pond 3P: EASTERN EAVE TRENCH

| | | | | |
|---|---|---|---|---|
| Inflow Area = | 0.287 ac,100.00% Impervious, Inflow Depth > 1.84" for 1-YEAR event | | | |
| Inflow = | 0.98 cfs @ | 11.90 hrs, Volume= | 0.044 af | |
| Outflow = | 0.86 cfs @ | 11.93 hrs, Volume= | 0.044 af, | Atten= 11%, Lag= 1.7 min |
| Discarded = | 0.86 cfs @ | 11.93 hrs, Volume= | 0.044 af | |
| Primary = | 0.00 cfs @ | 5.00 hrs, Volume= | 0.000 af | |

Routing by Stor-Ind method, Time Span= 5.00-20.00 hrs, dt= 0.05 hrs

Peak Elev= 0.11' @ 11.93 hrs Surf.Area= 780 sf Storage= 35 cf

Plug-Flow detention time= (not calculated: outflow precedes inflow)
Center-of-Mass det. time= 0.3 min ( 733.8 - 733.6 )

| Volume | Invert | Avail.Storage | Storage Description |
|---|---|---|---|
| #1 | 0.00' | 1,249 cf | **Custom Stage Data (Conic)** Listed below (Recalc)<br>3,122 cf Overall x 40.0% Voids |

| Elevation (feet) | Surf.Area (sq-ft) | Inc.Store (cubic-feet) | Cum.Store (cubic-feet) | Wet.Area (sq-ft) |
|---|---|---|---|---|
| 0.00 | 780 | 0 | 0 | 780 |
| 4.00 | 781 | 3,122 | 3,122 | 1,176 |

| Device | Routing | Invert | Outlet Devices |
|---|---|---|---|
| #1 | Discarded | 0.00' | **45.000 in/hr Exfiltration over Wetted area** |
| #2 | Primary | 3.90' | **170.0' long x 10.0' breadth Broad-Crested Rectangular Weir**<br>Head (feet) 0.20 0.40 0.60 0.80 1.00 1.20 1.40 1.60<br>Coef. (English) 2.49 2.56 2.70 2.69 2.68 2.69 2.67 2.64 |

**Discarded OutFlow** Max=0.82 cfs @ 11.93 hrs HW=0.10' (Free Discharge)
└**1=Exfiltration** (Exfiltration Controls 0.82 cfs)

**Primary OutFlow** Max=0.00 cfs @ 5.00 hrs HW=0.00' (Free Discharge)
└**2=Broad-Crested Rectangular Weir** ( Controls 0.00 cfs)

## Summary for Pond 4P: 4 DRYWELLS

| | | | | |
|---|---|---|---|---|
| Inflow Area = | 1.685 ac, 52.52% Impervious, Inflow Depth > 0.28" for 1-YEAR event | | | |
| Inflow = | 0.82 cfs @ | 11.97 hrs, Volume= | 0.039 af | |
| Outflow = | 0.50 cfs @ | 12.04 hrs, Volume= | 0.039 af, | Atten= 39%, Lag= 4.2 min |
| Discarded = | 0.50 cfs @ | 12.04 hrs, Volume= | 0.039 af | |

Routing by Stor-Ind method, Time Span= 5.00-20.00 hrs, dt= 0.05 hrs
Peak Elev= 0.87' @ 12.04 hrs Surf.Area= 432 sf Storage= 129 cf

Plug-Flow detention time= (not calculated: outflow precedes inflow)
Center-of-Mass det. time= 1.1 min ( 844.4 - 843.3 )

| Volume | Invert | Avail.Storage | Storage Description |
|---|---|---|---|
| #1 | 0.00' | 4,802 cf | **10.00'D x 10.00'H Vertical Cone/Cylinder Z=1.0** x 4<br>13,614 cf Overall - 1,608 cf Embedded = 12,005 cf x 40.0% Voids |
| #2 | 1.00' | 1,608 cf | **8.00'D x 8.00'H Vertical Cone/Cylinder** x 4 Inside #1 |
| | | 6,411 cf | Total Available Storage |

| Device | Routing | Invert | Outlet Devices |
|---|---|---|---|
| #1 | Discarded | 0.00' | **45.000 in/hr Exfiltration over Wetted area** |

**Discarded OutFlow** Max=0.50 cfs @ 12.04 hrs HW=0.85' (Free Discharge)
└**1=Exfiltration** (Exfiltration Controls 0.50 cfs)

## Summary for Pond 5P: 2 DRYWELLS

| | | | | |
|---|---|---|---|---|
| Inflow Area = | 0.838 ac, 39.44% Impervious, Inflow Depth > 0.11" for 1-YEAR event | | | |
| Inflow = | 0.06 cfs @ 12.02 hrs, Volume= | 0.008 af | | |
| Outflow = | 0.06 cfs @ 12.04 hrs, Volume= | 0.007 af, Atten= 2%, Lag= 1.3 min | | |
| Discarded = | 0.06 cfs @ 12.04 hrs, Volume= | 0.007 af | | |

Routing by Stor-Ind method, Time Span= 5.00-20.00 hrs, dt= 0.05 hrs
Peak Elev= 0.04' @ 12.04 hrs Surf.Area= 159 sf Storage= 2 cf

Plug-Flow detention time= 0.6 min calculated for 0.007 af (100% of inflow)
Center-of-Mass det. time= 0.4 min ( 893.8 - 893.4 )

| Volume | Invert | Avail.Storage | Storage Description |
|---|---|---|---|
| #1 | 0.00' | 2,401 cf | **10.00'D x 10.00'H Vertical Cone/Cylinder Z=1.0** x 2<br>6,807 cf Overall - 804 cf Embedded = 6,003 cf x 40.0% Voids |
| #2 | 1.00' | 804 cf | **8.00'D x 8.00'H Vertical Cone/Cylinder** x 2 Inside #1 |
| | | 3,205 cf | Total Available Storage |

| Device | Routing | Invert | Outlet Devices |
|---|---|---|---|
| #1 | Discarded | 0.00' | **45.000 in/hr Exfiltration over Wetted area** |

**Discarded OutFlow** Max=0.17 cfs @ 12.04 hrs HW=0.03' (Free Discharge)
└**1=Exfiltration** (Exfiltration Controls 0.17 cfs)

## Summary for Pond 6i: EXIST. INFILTRATION SWALE

| | | | | |
|---|---|---|---|---|
| Inflow Area = | 0.653 ac, 37.78% Impervious, Inflow Depth > 0.09" for 1-YEAR event | | | |
| Inflow = | 0.04 cfs @ 11.97 hrs, Volume= | 0.005 af | | |
| Outflow = | 0.04 cfs @ 11.98 hrs, Volume= | 0.005 af, Atten= 10%, Lag= 0.7 min | | |
| Discarded = | 0.04 cfs @ 11.98 hrs, Volume= | 0.005 af | | |
| Primary = | 0.00 cfs @ 5.00 hrs, Volume= | 0.000 af | | |

Routing by Stor-Ind method, Time Span= 5.00-20.00 hrs, dt= 0.05 hrs
Peak Elev= 0.00' @ 11.98 hrs Surf.Area= 390 sf Storage= 1 cf

Plug-Flow detention time= 0.2 min calculated for 0.005 af (100% of inflow)
Center-of-Mass det. time= 0.2 min ( 900.2 - 900.0 )

| Volume | Invert | Avail.Storage | Storage Description |
|---|---|---|---|
| #1 | 0.00' | 624 cf | **2.00'W x 195.00'L x 4.00'H Prismatoid**<br>1,560 cf Overall x 40.0% Voids |

| Device | Routing | Invert | Outlet Devices |
|---|---|---|---|
| #1 | Discarded | 0.00' | **45.000 in/hr Exfiltration over Wetted area** |
| #2 | Primary | 3.90' | **1.5" x 4.5" Horiz. Orifice/Grate X 18.00** C= 0.600<br>Limited to weir flow at low heads |

**Discarded OutFlow** Max=0.41 cfs @ 11.98 hrs HW=0.00' (Free Discharge)
└─**1=Exfiltration** (Exfiltration Controls 0.41 cfs)

**Primary OutFlow** Max=0.00 cfs @ 5.00 hrs HW=0.00' (Free Discharge)
└─**2=Orifice/Grate** ( Controls 0.00 cfs)

## Summary for Pond 6P: EXIST. DRYWELL

| | | | | |
|---|---|---|---|---|
| Inflow Area = | 0.653 ac, 37.78% Impervious, Inflow Depth = 0.00" for 1-YEAR event | | | |
| Inflow = | 0.00 cfs @ | 5.00 hrs, Volume= | 0.000 af | |
| Outflow = | 0.00 cfs @ | 5.00 hrs, Volume= | 0.000 af, Atten= 0%, Lag= 0.0 min | |
| Discarded = | 0.00 cfs @ | 5.00 hrs, Volume= | 0.000 af | |

Routing by Stor-Ind method, Time Span= 5.00-20.00 hrs, dt= 0.05 hrs
Peak Elev= 0.00' @ 5.00 hrs Surf.Area= 79 sf Storage= 0 cf

Plug-Flow detention time= (not calculated: initial storage excedes outflow)
Center-of-Mass det. time= (not calculated: no inflow)

| Volume | Invert | Avail.Storage | Storage Description |
|---|---|---|---|
| #1 | 0.00' | 425 cf | **10.00'D x 6.00'H Vertical Cone/Cylinder Z=1.0**<br>1,263 cf Overall - 201 cf Embedded = 1,062 cf x 40.0% Voids |
| #2 | 1.00' | 201 cf | **8.00'D x 4.00'H Vertical Cone/Cylinder** Inside #1 |
| | | 626 cf | Total Available Storage |

| Device | Routing | Invert | Outlet Devices |
|---|---|---|---|
| #1 | Discarded | 0.00' | **45.000 in/hr Exfiltration over Wetted area** |

**Discarded OutFlow** Max=0.00 cfs @ 5.00 hrs HW=0.00' (Free Discharge)
└─**1=Exfiltration** (Passes 0.00 cfs of 0.08 cfs potential flow)

# HydroCAD RESULTS

# POST DEVELOPED CONDITIONS
# 10-YEAR DESIGN STORM

Time span=5.00-20.00 hrs, dt=0.05 hrs, 301 points
Runoff by SCS TR-20 method, UH=SCS
Reach routing by Stor-Ind+Trans method - Pond routing by Stor-Ind method

**Subcatchment 1S: WEST SECTION OF** Runoff Area=24,693 sf 100.00% Impervious Runoff Depth>3.29"
Flow Length=190' Slope=0.0420 '/' Tc=1.7 min CN=98 Runoff=3.28 cfs 0.155 af

**Subcatchment 2S: CENTER SECTION OF** Runoff Area=25,563 sf 100.00% Impervious Runoff Depth>3.29"
Flow Length=100' Slope=0.0420 '/' Tc=1.0 min CN=98 Runoff=3.50 cfs 0.161 af

**Subcatchment 3S: EASTERN SECTION** Runoff Area=12,494 sf 100.00% Impervious Runoff Depth>3.29"
Flow Length=100' Slope=0.0420 '/' Tc=1.0 min CN=98 Runoff=1.71 cfs 0.079 af

**Subcatchment 4S: WEST SIDE AND REAR** Runoff Area=73,395 sf 52.52% Impervious Runoff Depth>1.08"
Flow Length=264' Tc=4.2 min CN=70 Runoff=3.73 cfs 0.152 af

**Subcatchment 5S: EAST SIDE AND REAR** Runoff Area=36,490 sf 39.44% Impervious Runoff Depth>0.67"
Flow Length=340' Tc=5.2 min CN=62 Runoff=1.04 cfs 0.047 af

**Subcatchment 6S: FRONT YARD &** Runoff Area=28,445 sf 37.78% Impervious Runoff Depth>0.63"
Flow Length=60' Slope=0.0300 '/' Tc=0.8 min CN=61 Runoff=0.85 cfs 0.034 af

**Pond 1P: WESTERN EAVE TRENCH** Peak Elev=1.32' Storage=758 cf Inflow=3.28 cfs 0.155 af
Discarded=1.68 cfs 0.156 af Primary=0.00 cfs 0.000 af Outflow=1.68 cfs 0.156 af

**Pond 2P: CENTER EAVE TRENCH** Peak Elev=0.45' Storage=386 cf Inflow=3.50 cfs 0.161 af
Discarded=2.32 cfs 0.163 af Primary=0.00 cfs 0.000 af Outflow=2.32 cfs 0.163 af

**Pond 3P: EASTERN EAVE TRENCH** Peak Elev=1.08' Storage=337 cf Inflow=1.71 cfs 0.079 af
Discarded=0.92 cfs 0.079 af Primary=0.00 cfs 0.000 af Outflow=0.92 cfs 0.079 af

**Pond 4P: 4 DRYWELLS** Peak Elev=4.26' Storage=1,516 cf Inflow=3.73 cfs 0.152 af
Outflow=1.45 cfs 0.152 af

**Pond 5P: 2 DRYWELLS** Peak Elev=2.48' Storage=335 cf Inflow=1.04 cfs 0.047 af
Outflow=0.45 cfs 0.047 af

**Pond 6i: EXIST. INFILTRATION SWALE** Peak Elev=0.54' Storage=83 cf Inflow=0.85 cfs 0.034 af
Discarded=0.63 cfs 0.034 af Primary=0.00 cfs 0.000 af Outflow=0.63 cfs 0.034 af

**Pond 6P: EXIST. DRYWELL** Peak Elev=0.00' Storage=0 cf Inflow=0.00 cfs 0.000 af
Outflow=0.00 cfs 0.000 af

**Total Runoff Area = 4.616 ac Runoff Volume = 0.627 af Average Runoff Depth = 1.63"**
**37.12% Pervious = 1.714 ac 62.88% Impervious = 2.903 ac**

## Summary for Subcatchment 1S: WEST SECTION OF ROOF

Runoff = 3.28 cfs @ 11.91 hrs, Volume= 0.155 af, Depth> 3.29"

Runoff by SCS TR-20 method, UH=SCS, Time Span= 5.00-20.00 hrs, dt= 0.05 hrs
Type II 24-hr 10-YEAR Rainfall=3.80"

| | Area (sf) | CN | Description |
|---|---|---|---|
| * | 24,693 | 98 | ROOF + EAVE TRENCH |
| | 24,693 | | 100.00% Impervious Area |

| Tc (min) | Length (feet) | Slope (ft/ft) | Velocity (ft/sec) | Capacity (cfs) | Description |
|---|---|---|---|---|---|
| 1.7 | 190 | 0.0420 | 1.82 | | **Sheet Flow, ACROSS ROOF TO EAVE** Smooth surfaces n= 0.011 P2= 2.40" |

## Summary for Subcatchment 2S: CENTER SECTION OF ROOF

Runoff = 3.50 cfs @ 11.90 hrs, Volume= 0.161 af, Depth> 3.29"

Runoff by SCS TR-20 method, UH=SCS, Time Span= 5.00-20.00 hrs, dt= 0.05 hrs
Type II 24-hr 10-YEAR Rainfall=3.80"

| | Area (sf) | CN | Description |
|---|---|---|---|
| * | 25,563 | 98 | ROOF + EAVE TRENCH |
| | 25,563 | | 100.00% Impervious Area |

| Tc (min) | Length (feet) | Slope (ft/ft) | Velocity (ft/sec) | Capacity (cfs) | Description |
|---|---|---|---|---|---|
| 1.0 | 100 | 0.0420 | 1.60 | | **Sheet Flow, ACROSS ROOF TO EAVE** Smooth surfaces n= 0.011 P2= 2.40" |

## Summary for Subcatchment 3S: EASTERN SECTION OF ROOF

Runoff = 1.71 cfs @ 11.90 hrs, Volume= 0.079 af, Depth> 3.29"

Runoff by SCS TR-20 method, UH=SCS, Time Span= 5.00-20.00 hrs, dt= 0.05 hrs
Type II 24-hr 10-YEAR Rainfall=3.80"

| | Area (sf) | CN | Description |
|---|---|---|---|
| * | 12,494 | 98 | ROOF + EAVE TRENCH |
| | 12,494 | | 100.00% Impervious Area |

| Tc (min) | Length (feet) | Slope (ft/ft) | Velocity (ft/sec) | Capacity (cfs) | Description |
|---|---|---|---|---|---|
| 1.0 | 100 | 0.0420 | 1.60 | | **Sheet Flow, ACROSS ROOF TO EAVE** Smooth surfaces n= 0.011 P2= 2.40" |

## Summary for Subcatchment 4S: WEST SIDE AND REAR

Runoff = 3.73 cfs @ 11.95 hrs, Volume= 0.152 af, Depth> 1.08"

Runoff by SCS TR-20 method, UH=SCS, Time Span= 5.00-20.00 hrs, dt= 0.05 hrs
Type II 24-hr 10-YEAR Rainfall=3.80"

| | Area (sf) | CN | Description |
|---|---|---|---|
| * | 38,544 | 98 | PAVEMENT |
| | 34,851 | 39 | >75% Grass cover, Good, HSG A |
| | 73,395 | 70 | Weighted Average |
| | 34,851 | | 47.48% Pervious Area |
| | 38,544 | | 52.52% Impervious Area |

| Tc (min) | Length (feet) | Slope (ft/ft) | Velocity (ft/sec) | Capacity (cfs) | Description |
|---|---|---|---|---|---|
| 0.4 | 24 | 0.0200 | 0.90 | | **Sheet Flow, ACROSS PAVEMENT TO SWALE** Smooth surfaces n= 0.011 P2= 2.40" |
| 3.8 | 240 | 0.0050 | 1.06 | | **Shallow Concentrated Flow, SHALLOW SWALE TO CB** Grassed Waterway Kv= 15.0 fps |
| 4.2 | 264 | Total | | | |

## Summary for Subcatchment 5S: EAST SIDE AND REAR

Runoff = 1.04 cfs @ 11.98 hrs, Volume= 0.047 af, Depth> 0.67"

Runoff by SCS TR-20 method, UH=SCS, Time Span= 5.00-20.00 hrs, dt= 0.05 hrs
Type II 24-hr 10-YEAR Rainfall=3.80"

| | Area (sf) | CN | Description |
|---|---|---|---|
| * | 14,393 | 98 | PAVEMENT |
| | 22,097 | 39 | >75% Grass cover, Good, HSG A |
| | 36,490 | 62 | Weighted Average |
| | 22,097 | | 60.56% Pervious Area |
| | 14,393 | | 39.44% Impervious Area |

| Tc (min) | Length (feet) | Slope (ft/ft) | Velocity (ft/sec) | Capacity (cfs) | Description |
|---|---|---|---|---|---|
| 1.4 | 100 | 0.0200 | 1.19 | | **Sheet Flow, ACROSS PAVEMENT TO SWALE** Smooth surfaces n= 0.011 P2= 2.40" |
| 3.8 | 240 | 0.0050 | 1.06 | | **Shallow Concentrated Flow, SHALLOW SWALE TO CB** Grassed Waterway Kv= 15.0 fps |
| 5.2 | 340 | Total | | | |

## Summary for Subcatchment 6S: FRONT YARD & PARKING LOT

Runoff = 0.85 cfs @ 11.92 hrs, Volume= 0.034 af, Depth> 0.63"

Runoff by SCS TR-20 method, UH=SCS, Time Span= 5.00-20.00 hrs, dt= 0.05 hrs
Type II 24-hr 10-YEAR Rainfall=3.80"

| | Area (sf) | CN | Description |
|---|---|---|---|
| * | 10,746 | 98 | PAVEMENT & SIDEWALK |
| | 17,699 | 39 | >75% Grass cover, Good, HSG A |
| | 28,445 | 61 | Weighted Average |
| | 17,699 | | 62.22% Pervious Area |
| | 10,746 | | 37.78% Impervious Area |

| Tc (min) | Length (feet) | Slope (ft/ft) | Velocity (ft/sec) | Capacity (cfs) | Description |
|---|---|---|---|---|---|
| 0.8 | 60 | 0.0300 | 1.26 | | **Sheet Flow, ACROSS PAVEMENT TO SWALE** Smooth surfaces n= 0.011 P2= 2.40" |

## Summary for Pond 1P: WESTERN EAVE TRENCH

Inflow Area = 0.567 ac,100.00% Impervious, Inflow Depth > 3.29" for 10-YEAR event
Inflow = 3.28 cfs @ 11.91 hrs, Volume= 0.155 af
Outflow = 1.68 cfs @ 11.99 hrs, Volume= 0.156 af, Atten= 49%, Lag= 5.2 min
Discarded = 1.68 cfs @ 11.99 hrs, Volume= 0.156 af
Primary = 0.00 cfs @ 5.00 hrs, Volume= 0.000 af

Routing by Stor-Ind method, Time Span= 5.00-20.00 hrs, dt= 0.05 hrs
Peak Elev= 1.32' @ 11.99 hrs Surf.Area= 1,433 sf Storage= 758 cf

Plug-Flow detention time= (not calculated: outflow precedes inflow)
Center-of-Mass det. time= 1.6 min ( 730.3 - 728.7 )

| Volume | Invert | Avail.Storage | Storage Description |
|---|---|---|---|
| #1 | 0.00' | 2,294 cf | **Custom Stage Data (Conic)** Listed below (Recalc) 5,734 cf Overall x 40.0% Voids |

| Elevation (feet) | Surf.Area (sq-ft) | Inc.Store (cubic-feet) | Cum.Store (cubic-feet) | Wet.Area (sq-ft) |
|---|---|---|---|---|
| 0.00 | 1,433 | 0 | 0 | 1,433 |
| 4.00 | 1,434 | 5,734 | 5,734 | 1,970 |

| Device | Routing | Invert | Outlet Devices |
|---|---|---|---|
| #1 | Discarded | 0.00' | **45.000 in/hr Exfiltration over Wetted area** |
| #2 | Primary | 3.90' | **170.0' long x 10.0' breadth Broad-Crested Rectangular Weir** Head (feet) 0.20 0.40 0.60 0.80 1.00 1.20 1.40 1.60 Coef. (English) 2.49 2.56 2.70 2.69 2.68 2.69 2.67 2.64 |

**Discarded OutFlow** Max=1.67 cfs @ 11.99 hrs HW=1.30' (Free Discharge)
└**1=Exfiltration** (Exfiltration Controls 1.67 cfs)

**Primary OutFlow** Max=0.00 cfs @ 5.00 hrs HW=0.00' (Free Discharge)
└**2=Broad-Crested Rectangular Weir** ( Controls 0.00 cfs)

## Summary for Pond 2P: CENTER EAVE TRENCH

| | | | | |
|---|---|---|---|---|
| Inflow Area = | 0.587 ac,100.00% Impervious, Inflow Depth > 3.29" for 10-YEAR event | | | |
| Inflow = | 3.50 cfs @ | 11.90 hrs, Volume= | 0.161 af | |
| Outflow = | 2.32 cfs @ | 11.96 hrs, Volume= | 0.163 af, | Atten= 34%, Lag= 3.5 min |
| Discarded = | 2.32 cfs @ | 11.96 hrs, Volume= | 0.163 af | |
| Primary = | 0.00 cfs @ | 5.00 hrs, Volume= | 0.000 af | |

Routing by Stor-Ind method, Time Span= 5.00-20.00 hrs, dt= 0.05 hrs
Peak Elev= 0.45' @ 11.96 hrs Surf.Area= 2,153 sf Storage= 386 cf

Plug-Flow detention time= (not calculated: outflow precedes inflow)
Center-of-Mass det. time= 0.6 min ( 728.7 - 728.2 )

| Volume | Invert | Avail.Storage | Storage Description |
|---|---|---|---|
| #1 | 0.00' | 3,446 cf | **Custom Stage Data (Conic)** Listed below (Recalc)<br>8,614 cf Overall x 40.0% Voids |

| Elevation (feet) | Surf.Area (sq-ft) | Inc.Store (cubic-feet) | Cum.Store (cubic-feet) | Wet.Area (sq-ft) |
|---|---|---|---|---|
| 0.00 | 2,153 | 0 | 0 | 2,153 |
| 4.00 | 2,154 | 8,614 | 8,614 | 2,811 |

| Device | Routing | Invert | Outlet Devices |
|---|---|---|---|
| #1 | Discarded | 0.00' | **45.000 in/hr Exfiltration over Wetted area** |
| #2 | Primary | 3.90' | **170.0' long x 10.0' breadth Broad-Crested Rectangular Weir**<br>Head (feet) 0.20 0.40 0.60 0.80 1.00 1.20 1.40 1.60<br>Coef. (English) 2.49 2.56 2.70 2.69 2.68 2.69 2.67 2.64 |

**Discarded OutFlow** Max=2.32 cfs @ 11.96 hrs HW=0.43' (Free Discharge)
└**1=Exfiltration** (Exfiltration Controls 2.32 cfs)

**Primary OutFlow** Max=0.00 cfs @ 5.00 hrs HW=0.00' (Free Discharge)
└**2=Broad-Crested Rectangular Weir** ( Controls 0.00 cfs)

## Summary for Pond 3P: EASTERN EAVE TRENCH

| | | | | |
|---|---|---|---|---|
| Inflow Area = | 0.287 ac,100.00% Impervious, Inflow Depth > 3.29" for 10-YEAR event | | | |
| Inflow = | 1.71 cfs @ | 11.90 hrs, Volume= | 0.079 af | |
| Outflow = | 0.92 cfs @ | 11.97 hrs, Volume= | 0.079 af, | Atten= 46%, Lag= 4.5 min |
| Discarded = | 0.92 cfs @ | 11.97 hrs, Volume= | 0.079 af | |
| Primary = | 0.00 cfs @ | 5.00 hrs, Volume= | 0.000 af | |

Routing by Stor-Ind method, Time Span= 5.00-20.00 hrs, dt= 0.05 hrs

Peak Elev= 1.08' @ 11.97 hrs Surf.Area= 780 sf Storage= 337 cf

Plug-Flow detention time= (not calculated: outflow precedes inflow)
Center-of-Mass det. time= 1.3 min ( 729.5 - 728.2 )

| Volume | Invert | Avail.Storage | Storage Description |
|---|---|---|---|
| #1 | 0.00' | 1,249 cf | **Custom Stage Data (Conic)** Listed below (Recalc)<br>3,122 cf Overall x 40.0% Voids |

| Elevation (feet) | Surf.Area (sq-ft) | Inc.Store (cubic-feet) | Cum.Store (cubic-feet) | Wet.Area (sq-ft) |
|---|---|---|---|---|
| 0.00 | 780 | 0 | 0 | 780 |
| 4.00 | 781 | 3,122 | 3,122 | 1,176 |

| Device | Routing | Invert | Outlet Devices |
|---|---|---|---|
| #1 | Discarded | 0.00' | **45.000 in/hr Exfiltration over Wetted area** |
| #2 | Primary | 3.90' | **170.0' long x 10.0' breadth Broad-Crested Rectangular Weir**<br>Head (feet) 0.20 0.40 0.60 0.80 1.00 1.20 1.40 1.60<br>Coef. (English) 2.49 2.56 2.70 2.69 2.68 2.69 2.67 2.64 |

**Discarded OutFlow** Max=0.92 cfs @ 11.97 hrs HW=1.04' (Free Discharge)
└**1=Exfiltration** (Exfiltration Controls 0.92 cfs)

**Primary OutFlow** Max=0.00 cfs @ 5.00 hrs HW=0.00' (Free Discharge)
└**2=Broad-Crested Rectangular Weir** ( Controls 0.00 cfs)

## Summary for Pond 4P: 4 DRYWELLS

Inflow Area = 1.685 ac, 52.52% Impervious, Inflow Depth > 1.08" for 10-YEAR event
Inflow = 3.73 cfs @ 11.95 hrs, Volume= 0.152 af
Outflow = 1.45 cfs @ 12.06 hrs, Volume= 0.152 af, Atten= 61%, Lag= 6.4 min
Discarded = 1.45 cfs @ 12.06 hrs, Volume= 0.152 af

Routing by Stor-Ind method, Time Span= 5.00-20.00 hrs, dt= 0.05 hrs
Peak Elev= 4.26' @ 12.06 hrs Surf.Area= 1,078 sf Storage= 1,516 cf

Plug-Flow detention time= 7.4 min calculated for 0.151 af (100% of inflow)
Center-of-Mass det. time= 7.3 min ( 815.8 - 808.5 )

| Volume | Invert | Avail.Storage | Storage Description |
|---|---|---|---|
| #1 | 0.00' | 4,802 cf | **10.00'D x 10.00'H Vertical Cone/Cylinder Z=1.0** x 4<br>13,614 cf Overall - 1,608 cf Embedded = 12,005 cf x 40.0% Voids |
| #2 | 1.00' | 1,608 cf | **8.00'D x 8.00'H Vertical Cone/Cylinder** x 4 Inside #1 |
| | | 6,411 cf | Total Available Storage |

| Device | Routing | Invert | Outlet Devices |
|---|---|---|---|
| #1 | Discarded | 0.00' | **45.000 in/hr Exfiltration over Wetted area** |

**Discarded OutFlow** Max=1.44 cfs @ 12.06 hrs HW=4.23' (Free Discharge)
└**1=Exfiltration** (Exfiltration Controls 1.44 cfs)

## Summary for Pond 5P: 2 DRYWELLS

| | | | | |
|---|---|---|---|---|
| Inflow Area = | 0.838 ac, 39.44% Impervious, Inflow Depth > 0.67" for 10-YEAR event | | | |
| Inflow = | 1.04 cfs @ 11.98 hrs, Volume= | 0.047 af | | |
| Outflow = | 0.45 cfs @ 12.08 hrs, Volume= | 0.047 af, Atten= 57%, Lag= 6.0 min | | |
| Discarded = | 0.45 cfs @ 12.08 hrs, Volume= | 0.047 af | | |

Routing by Stor-Ind method, Time Span= 5.00-20.00 hrs, dt= 0.05 hrs
Peak Elev= 2.48' @ 12.08 hrs Surf.Area= 351 sf Storage= 335 cf

Plug-Flow detention time= 4.3 min calculated for 0.047 af (100% of inflow)
Center-of-Mass det. time= 4.2 min ( 833.1 - 829.0 )

| Volume | Invert | Avail.Storage | Storage Description |
|---|---|---|---|
| #1 | 0.00' | 2,401 cf | **10.00'D x 10.00'H Vertical Cone/Cylinder Z=1.0** x 2<br>6,807 cf Overall - 804 cf Embedded = 6,003 cf x 40.0% Voids |
| #2 | 1.00' | 804 cf | **8.00'D x 8.00'H Vertical Cone/Cylinder** x 2 Inside #1 |
| | | 3,205 cf | Total Available Storage |

| Device | Routing | Invert | Outlet Devices |
|---|---|---|---|
| #1 | Discarded | 0.00' | **45.000 in/hr Exfiltration over Wetted area** |

**Discarded OutFlow** Max=0.45 cfs @ 12.08 hrs HW=2.46' (Free Discharge)
└**1=Exfiltration** (Exfiltration Controls 0.45 cfs)

## Summary for Pond 6i: EXIST. INFILTRATION SWALE

| | | | | |
|---|---|---|---|---|
| Inflow Area = | 0.653 ac, 37.78% Impervious, Inflow Depth > 0.63" for 10-YEAR event | | | |
| Inflow = | 0.85 cfs @ 11.92 hrs, Volume= | 0.034 af | | |
| Outflow = | 0.63 cfs @ 11.96 hrs, Volume= | 0.034 af, Atten= 27%, Lag= 2.8 min | | |
| Discarded = | 0.63 cfs @ 11.96 hrs, Volume= | 0.034 af | | |
| Primary = | 0.00 cfs @ 5.00 hrs, Volume= | 0.000 af | | |

Routing by Stor-Ind method, Time Span= 5.00-20.00 hrs, dt= 0.05 hrs
Peak Elev= 0.54' @ 11.96 hrs Surf.Area= 390 sf Storage= 83 cf

Plug-Flow detention time= (not calculated: outflow precedes inflow)
Center-of-Mass det. time= 0.5 min ( 829.4 - 828.8 )

| Volume | Invert | Avail.Storage | Storage Description |
|---|---|---|---|
| #1 | 0.00' | 624 cf | **2.00'W x 195.00'L x 4.00'H Prismatoid**<br>1,560 cf Overall x 40.0% Voids |

| Device | Routing | Invert | Outlet Devices |
|---|---|---|---|
| #1 | Discarded | 0.00' | **45.000 in/hr Exfiltration over Wetted area** |
| #2 | Primary | 3.90' | **1.5" x 4.5" Horiz. Orifice/Grate X 18.00** C= 0.600<br>Limited to weir flow at low heads |

**Discarded OutFlow** Max=0.61 cfs @ 11.96 hrs HW=0.50' (Free Discharge)
└─**1=Exfiltration** (Exfiltration Controls 0.61 cfs)

**Primary OutFlow** Max=0.00 cfs @ 5.00 hrs HW=0.00' (Free Discharge)
└─**2=Orifice/Grate** ( Controls 0.00 cfs)

## Summary for Pond 6P: EXIST. DRYWELL

| | | | | |
|---|---|---|---|---|
| Inflow Area = | 0.653 ac, 37.78% Impervious, Inflow Depth = 0.00" for 10-YEAR event | | | |
| Inflow = | 0.00 cfs @ | 5.00 hrs, Volume= | 0.000 af | |
| Outflow = | 0.00 cfs @ | 5.00 hrs, Volume= | 0.000 af, Atten= 0%, Lag= 0.0 min | |
| Discarded = | 0.00 cfs @ | 5.00 hrs, Volume= | 0.000 af | |

Routing by Stor-Ind method, Time Span= 5.00-20.00 hrs, dt= 0.05 hrs
Peak Elev= 0.00' @ 5.00 hrs Surf.Area= 79 sf Storage= 0 cf

Plug-Flow detention time= (not calculated: initial storage excedes outflow)
Center-of-Mass det. time= (not calculated: no inflow)

| Volume | Invert | Avail.Storage | Storage Description |
|---|---|---|---|
| #1 | 0.00' | 425 cf | **10.00'D x 6.00'H Vertical Cone/Cylinder Z=1.0**<br>1,263 cf Overall - 201 cf Embedded = 1,062 cf x 40.0% Voids |
| #2 | 1.00' | 201 cf | **8.00'D x 4.00'H Vertical Cone/Cylinder** Inside #1 |
| | | 626 cf | Total Available Storage |

| Device | Routing | Invert | Outlet Devices |
|---|---|---|---|
| #1 | Discarded | 0.00' | **45.000 in/hr Exfiltration over Wetted area** |

**Discarded OutFlow** Max=0.00 cfs @ 5.00 hrs HW=0.00' (Free Discharge)
└─**1=Exfiltration** (Passes 0.00 cfs of 0.08 cfs potential flow)

# HydroCAD RESULTS

# POST DEVELOPED CONDITIONS
# 100-YEAR DESIGN STORM

Time span=5.00-20.00 hrs, dt=0.05 hrs, 301 points
Runoff by SCS TR-20 method, UH=SCS
Reach routing by Stor-Ind+Trans method - Pond routing by Stor-Ind method

**Subcatchment 1S: WEST SECTION OF** Runoff Area=24,693 sf 100.00% Impervious Runoff Depth>5.63"
Flow Length=190' Slope=0.0420 '/' Tc=1.7 min CN=98 Runoff=5.55 cfs 0.266 af

**Subcatchment 2S: CENTER SECTION OF** Runoff Area=25,563 sf 100.00% Impervious Runoff Depth>5.63"
Flow Length=100' Slope=0.0420 '/' Tc=1.0 min CN=98 Runoff=5.93 cfs 0.275 af

**Subcatchment 3S: EASTERN SECTION** Runoff Area=12,494 sf 100.00% Impervious Runoff Depth>5.63"
Flow Length=100' Slope=0.0420 '/' Tc=1.0 min CN=98 Runoff=2.90 cfs 0.134 af

**Subcatchment 4S: WEST SIDE AND REAR** Runoff Area=73,395 sf 52.52% Impervious Runoff Depth>2.88"
Flow Length=264' Tc=4.2 min CN=70 Runoff=9.82 cfs 0.404 af

**Subcatchment 5S: EAST SIDE AND REAR** Runoff Area=36,490 sf 39.44% Impervious Runoff Depth>2.15"
Flow Length=340' Tc=5.2 min CN=62 Runoff=3.53 cfs 0.150 af

**Subcatchment 6S: FRONT YARD &** Runoff Area=28,445 sf 37.78% Impervious Runoff Depth>2.07"
Flow Length=60' Slope=0.0300 '/' Tc=0.8 min CN=61 Runoff=3.00 cfs 0.113 af

**Pond 1P: WESTERN EAVE TRENCH** Peak Elev=3.88' Storage=2,225 cf Inflow=5.55 cfs 0.266 af
Discarded=2.04 cfs 0.266 af Primary=0.00 cfs 0.000 af Outflow=2.04 cfs 0.266 af

**Pond 2P: CENTER EAVE TRENCH** Peak Elev=1.92' Storage=1,654 cf Inflow=5.93 cfs 0.275 af
Discarded=2.57 cfs 0.275 af Primary=0.00 cfs 0.000 af Outflow=2.57 cfs 0.275 af

**Pond 3P: EASTERN EAVE TRENCH** Peak Elev=3.28' Storage=1,023 cf Inflow=2.90 cfs 0.134 af
Discarded=1.15 cfs 0.134 af Primary=0.00 cfs 0.000 af Outflow=1.15 cfs 0.134 af

**Pond 4P: 4 DRYWELLS** Peak Elev=8.80' Storage=5,131 cf Inflow=9.82 cfs 0.404 af
Outflow=3.39 cfs 0.404 af

**Pond 5P: 2 DRYWELLS** Peak Elev=7.07' Storage=1,736 cf Inflow=3.53 cfs 0.150 af
Outflow=1.28 cfs 0.150 af

**Pond 6i: EXIST. INFILTRATION SWALE** Peak Elev=3.94' Storage=615 cf Inflow=3.00 cfs 0.113 af
Discarded=2.02 cfs 0.112 af Primary=0.23 cfs 0.001 af Outflow=2.25 cfs 0.113 af

**Pond 6P: EXIST. DRYWELL** Peak Elev=0.45' Storage=16 cf Inflow=0.23 cfs 0.001 af
Outflow=0.11 cfs 0.001 af

**Total Runoff Area = 4.616 ac Runoff Volume = 1.342 af Average Runoff Depth = 3.49"**
**37.12% Pervious = 1.714 ac 62.88% Impervious = 2.903 ac**

## Summary for Subcatchment 1S: WEST SECTION OF ROOF

Runoff = 5.55 cfs @ 11.91 hrs, Volume= 0.266 af, Depth> 5.63"

Runoff by SCS TR-20 method, UH=SCS, Time Span= 5.00-20.00 hrs, dt= 0.05 hrs
Type II 24-hr 100-YEAR Rainfall=6.40"

| | Area (sf) | CN | Description |
|---|---|---|---|
| * | 24,693 | 98 | ROOF + EAVE TRENCH |
| | 24,693 | | 100.00% Impervious Area |

| Tc (min) | Length (feet) | Slope (ft/ft) | Velocity (ft/sec) | Capacity (cfs) | Description |
|---|---|---|---|---|---|
| 1.7 | 190 | 0.0420 | 1.82 | | **Sheet Flow, ACROSS ROOF TO EAVE** Smooth surfaces n= 0.011 P2= 2.40" |

## Summary for Subcatchment 2S: CENTER SECTION OF ROOF

Runoff = 5.93 cfs @ 11.90 hrs, Volume= 0.275 af, Depth> 5.63"

Runoff by SCS TR-20 method, UH=SCS, Time Span= 5.00-20.00 hrs, dt= 0.05 hrs
Type II 24-hr 100-YEAR Rainfall=6.40"

| | Area (sf) | CN | Description |
|---|---|---|---|
| * | 25,563 | 98 | ROOF + EAVE TRENCH |
| | 25,563 | | 100.00% Impervious Area |

| Tc (min) | Length (feet) | Slope (ft/ft) | Velocity (ft/sec) | Capacity (cfs) | Description |
|---|---|---|---|---|---|
| 1.0 | 100 | 0.0420 | 1.60 | | **Sheet Flow, ACROSS ROOF TO EAVE** Smooth surfaces n= 0.011 P2= 2.40" |

## Summary for Subcatchment 3S: EASTERN SECTION OF ROOF

Runoff = 2.90 cfs @ 11.90 hrs, Volume= 0.134 af, Depth> 5.63"

Runoff by SCS TR-20 method, UH=SCS, Time Span= 5.00-20.00 hrs, dt= 0.05 hrs
Type II 24-hr 100-YEAR Rainfall=6.40"

| | Area (sf) | CN | Description |
|---|---|---|---|
| * | 12,494 | 98 | ROOF + EAVE TRENCH |
| | 12,494 | | 100.00% Impervious Area |

| Tc (min) | Length (feet) | Slope (ft/ft) | Velocity (ft/sec) | Capacity (cfs) | Description |
|---|---|---|---|---|---|
| 1.0 | 100 | 0.0420 | 1.60 | | **Sheet Flow, ACROSS ROOF TO EAVE** Smooth surfaces n= 0.011 P2= 2.40" |

## Summary for Subcatchment 4S: WEST SIDE AND REAR

Runoff = 9.82 cfs @ 11.95 hrs, Volume= 0.404 af, Depth> 2.88"

Runoff by SCS TR-20 method, UH=SCS, Time Span= 5.00-20.00 hrs, dt= 0.05 hrs
Type II 24-hr 100-YEAR Rainfall=6.40"

| | Area (sf) | CN | Description |
|---|---|---|---|
| * | 38,544 | 98 | PAVEMENT |
| | 34,851 | 39 | >75% Grass cover, Good, HSG A |
| | 73,395 | 70 | Weighted Average |
| | 34,851 | | 47.48% Pervious Area |
| | 38,544 | | 52.52% Impervious Area |

| Tc (min) | Length (feet) | Slope (ft/ft) | Velocity (ft/sec) | Capacity (cfs) | Description |
|---|---|---|---|---|---|
| 0.4 | 24 | 0.0200 | 0.90 | | **Sheet Flow, ACROSS PAVEMENT TO SWALE** Smooth surfaces n= 0.011 P2= 2.40" |
| 3.8 | 240 | 0.0050 | 1.06 | | **Shallow Concentrated Flow, SHALLOW SWALE TO CB** Grassed Waterway Kv= 15.0 fps |
| 4.2 | 264 | Total | | | |

## Summary for Subcatchment 5S: EAST SIDE AND REAR

Runoff = 3.53 cfs @ 11.97 hrs, Volume= 0.150 af, Depth> 2.15"

Runoff by SCS TR-20 method, UH=SCS, Time Span= 5.00-20.00 hrs, dt= 0.05 hrs
Type II 24-hr 100-YEAR Rainfall=6.40"

| | Area (sf) | CN | Description |
|---|---|---|---|
| * | 14,393 | 98 | PAVEMENT |
| | 22,097 | 39 | >75% Grass cover, Good, HSG A |
| | 36,490 | 62 | Weighted Average |
| | 22,097 | | 60.56% Pervious Area |
| | 14,393 | | 39.44% Impervious Area |

| Tc (min) | Length (feet) | Slope (ft/ft) | Velocity (ft/sec) | Capacity (cfs) | Description |
|---|---|---|---|---|---|
| 1.4 | 100 | 0.0200 | 1.19 | | **Sheet Flow, ACROSS PAVEMENT TO SWALE** Smooth surfaces n= 0.011 P2= 2.40" |
| 3.8 | 240 | 0.0050 | 1.06 | | **Shallow Concentrated Flow, SHALLOW SWALE TO CB** Grassed Waterway Kv= 15.0 fps |
| 5.2 | 340 | Total | | | |

## Summary for Subcatchment 6S: FRONT YARD & PARKING LOT

Runoff = 3.00 cfs @ 11.90 hrs, Volume= 0.113 af, Depth> 2.07"

Runoff by SCS TR-20 method, UH=SCS, Time Span= 5.00-20.00 hrs, dt= 0.05 hrs
Type II 24-hr 100-YEAR Rainfall=6.40"

| | Area (sf) | CN | Description |
|---|---|---|---|
| * | 10,746 | 98 | PAVEMENT & SIDEWALK |
| | 17,699 | 39 | >75% Grass cover, Good, HSG A |
| | 28,445 | 61 | Weighted Average |
| | 17,699 | | 62.22% Pervious Area |
| | 10,746 | | 37.78% Impervious Area |

| Tc (min) | Length (feet) | Slope (ft/ft) | Velocity (ft/sec) | Capacity (cfs) | Description |
|---|---|---|---|---|---|
| 0.8 | 60 | 0.0300 | 1.26 | | **Sheet Flow, ACROSS PAVEMENT TO SWALE** Smooth surfaces n= 0.011 P2= 2.40" |

## Summary for Pond 1P: WESTERN EAVE TRENCH

Inflow Area = 0.567 ac,100.00% Impervious, Inflow Depth > 5.63" for 100-YEAR event
Inflow = 5.55 cfs @ 11.91 hrs, Volume= 0.266 af
Outflow = 2.04 cfs @ 12.01 hrs, Volume= 0.266 af, Atten= 63%, Lag= 6.4 min
Discarded = 2.04 cfs @ 12.01 hrs, Volume= 0.266 af
Primary = 0.00 cfs @ 5.00 hrs, Volume= 0.000 af

Routing by Stor-Ind method, Time Span= 5.00-20.00 hrs, dt= 0.05 hrs
Peak Elev= 3.88' @ 12.01 hrs Surf.Area= 1,434 sf Storage= 2,225 cf

Plug-Flow detention time= 4.9 min calculated for 0.265 af (100% of inflow)
Center-of-Mass det. time= 4.8 min ( 730.6 - 725.9 )

| Volume | Invert | Avail.Storage | Storage Description |
|---|---|---|---|
| #1 | 0.00' | 2,294 cf | **Custom Stage Data (Conic)** Listed below (Recalc) 5,734 cf Overall x 40.0% Voids |

| Elevation (feet) | Surf.Area (sq-ft) | Inc.Store (cubic-feet) | Cum.Store (cubic-feet) | Wet.Area (sq-ft) |
|---|---|---|---|---|
| 0.00 | 1,433 | 0 | 0 | 1,433 |
| 4.00 | 1,434 | 5,734 | 5,734 | 1,970 |

| Device | Routing | Invert | Outlet Devices |
|---|---|---|---|
| #1 | Discarded | 0.00' | **45.000 in/hr Exfiltration over Wetted area** |
| #2 | Primary | 3.90' | **170.0' long x 10.0' breadth Broad-Crested Rectangular Weir** Head (feet) 0.20 0.40 0.60 0.80 1.00 1.20 1.40 1.60 Coef. (English) 2.49 2.56 2.70 2.69 2.68 2.69 2.67 2.64 |

**Discarded OutFlow** Max=2.03 cfs @ 12.01 hrs HW=3.82' (Free Discharge)
└**1=Exfiltration** (Exfiltration Controls 2.03 cfs)

**Primary OutFlow** Max=0.00 cfs @ 5.00 hrs HW=0.00' (Free Discharge)
└**2=Broad-Crested Rectangular Weir** ( Controls 0.00 cfs)

## Summary for Pond 2P: CENTER EAVE TRENCH

| | | | | |
|---|---|---|---|---|
| Inflow Area = | 0.587 ac,100.00% Impervious, Inflow Depth > 5.63" for 100-YEAR event | | | |
| Inflow = | 5.93 cfs @ | 11.90 hrs, Volume= | 0.275 af | |
| Outflow = | 2.57 cfs @ | 11.99 hrs, Volume= | 0.275 af, | Atten= 57%, Lag= 5.5 min |
| Discarded = | 2.57 cfs @ | 11.99 hrs, Volume= | 0.275 af | |
| Primary = | 0.00 cfs @ | 5.00 hrs, Volume= | 0.000 af | |

Routing by Stor-Ind method, Time Span= 5.00-20.00 hrs, dt= 0.05 hrs
Peak Elev= 1.92' @ 11.99 hrs Surf.Area= 2,153 sf Storage= 1,654 cf

Plug-Flow detention time= (not calculated: outflow precedes inflow)
Center-of-Mass det. time= 2.4 min ( 727.7 - 725.4 )

| Volume | Invert | Avail.Storage | Storage Description |
|---|---|---|---|
| #1 | 0.00' | 3,446 cf | **Custom Stage Data (Conic)** Listed below (Recalc)<br>8,614 cf Overall x 40.0% Voids |

| Elevation (feet) | Surf.Area (sq-ft) | Inc.Store (cubic-feet) | Cum.Store (cubic-feet) | Wet.Area (sq-ft) |
|---|---|---|---|---|
| 0.00 | 2,153 | 0 | 0 | 2,153 |
| 4.00 | 2,154 | 8,614 | 8,614 | 2,811 |

| Device | Routing | Invert | Outlet Devices |
|---|---|---|---|
| #1 | Discarded | 0.00' | **45.000 in/hr Exfiltration over Wetted area** |
| #2 | Primary | 3.90' | **170.0' long x 10.0' breadth Broad-Crested Rectangular Weir**<br>Head (feet) 0.20 0.40 0.60 0.80 1.00 1.20 1.40 1.60<br>Coef. (English) 2.49 2.56 2.70 2.69 2.68 2.69 2.67 2.64 |

**Discarded OutFlow** Max=2.57 cfs @ 11.99 hrs HW=1.89' (Free Discharge)
└**1=Exfiltration** (Exfiltration Controls 2.57 cfs)

**Primary OutFlow** Max=0.00 cfs @ 5.00 hrs HW=0.00' (Free Discharge)
└**2=Broad-Crested Rectangular Weir** ( Controls 0.00 cfs)

## Summary for Pond 3P: EASTERN EAVE TRENCH

| | | | | |
|---|---|---|---|---|
| Inflow Area = | 0.287 ac,100.00% Impervious, Inflow Depth > 5.63" for 100-YEAR event | | | |
| Inflow = | 2.90 cfs @ | 11.90 hrs, Volume= | 0.134 af | |
| Outflow = | 1.15 cfs @ | 12.00 hrs, Volume= | 0.134 af, | Atten= 60%, Lag= 5.9 min |
| Discarded = | 1.15 cfs @ | 12.00 hrs, Volume= | 0.134 af | |
| Primary = | 0.00 cfs @ | 5.00 hrs, Volume= | 0.000 af | |

Routing by Stor-Ind method, Time Span= 5.00-20.00 hrs, dt= 0.05 hrs

Peak Elev= 3.28' @ 12.00 hrs Surf.Area= 781 sf Storage= 1,023 cf

Plug-Flow detention time= 3.9 min calculated for 0.134 af (100% of inflow)
Center-of-Mass det. time= 3.8 min ( 729.2 - 725.4 )

| Volume | Invert | Avail.Storage | Storage Description |
|---|---|---|---|
| #1 | 0.00' | 1,249 cf | **Custom Stage Data (Conic)** Listed below (Recalc)<br>3,122 cf Overall x 40.0% Voids |

| Elevation (feet) | Surf.Area (sq-ft) | Inc.Store (cubic-feet) | Cum.Store (cubic-feet) | Wet.Area (sq-ft) |
|---|---|---|---|---|
| 0.00 | 780 | 0 | 0 | 780 |
| 4.00 | 781 | 3,122 | 3,122 | 1,176 |

| Device | Routing | Invert | Outlet Devices |
|---|---|---|---|
| #1 | Discarded | 0.00' | **45.000 in/hr Exfiltration over Wetted area** |
| #2 | Primary | 3.90' | **170.0' long x 10.0' breadth Broad-Crested Rectangular Weir**<br>Head (feet) 0.20 0.40 0.60 0.80 1.00 1.20 1.40 1.60<br>Coef. (English) 2.49 2.56 2.70 2.69 2.68 2.69 2.67 2.64 |

**Discarded OutFlow** Max=1.15 cfs @ 12.00 hrs HW=3.26' (Free Discharge)
└**1=Exfiltration** (Exfiltration Controls 1.15 cfs)

**Primary OutFlow** Max=0.00 cfs @ 5.00 hrs HW=0.00' (Free Discharge)
└**2=Broad-Crested Rectangular Weir** ( Controls 0.00 cfs)

## Summary for Pond 4P: 4 DRYWELLS

| | | | | |
|---|---|---|---|---|
| Inflow Area = | 1.685 ac, 52.52% Impervious, Inflow Depth > 2.88" for 100-YEAR event | | | |
| Inflow = | 9.82 cfs @ | 11.95 hrs, Volume= | 0.404 af | |
| Outflow = | 3.39 cfs @ | 12.07 hrs, Volume= | 0.404 af, Atten= 66%, Lag= 7.0 min | |
| Discarded = | 3.39 cfs @ | 12.07 hrs, Volume= | 0.404 af | |

Routing by Stor-Ind method, Time Span= 5.00-20.00 hrs, dt= 0.05 hrs
Peak Elev= 8.80' @ 12.07 hrs Surf.Area= 2,392 sf Storage= 5,131 cf

Plug-Flow detention time= 13.4 min calculated for 0.402 af (100% of inflow)
Center-of-Mass det. time= 13.3 min ( 801.0 - 787.8 )

| Volume | Invert | Avail.Storage | Storage Description |
|---|---|---|---|
| #1 | 0.00' | 4,802 cf | **10.00'D x 10.00'H Vertical Cone/Cylinder Z=1.0** x 4<br>13,614 cf Overall - 1,608 cf Embedded = 12,005 cf x 40.0% Voids |
| #2 | 1.00' | 1,608 cf | **8.00'D x 8.00'H Vertical Cone/Cylinder** x 4 Inside #1 |
| | | 6,411 cf | Total Available Storage |

| Device | Routing | Invert | Outlet Devices |
|---|---|---|---|
| #1 | Discarded | 0.00' | **45.000 in/hr Exfiltration over Wetted area** |

**Discarded OutFlow** Max=3.36 cfs @ 12.07 hrs HW=8.74' (Free Discharge)
└**1=Exfiltration** (Exfiltration Controls 3.36 cfs)

## Summary for Pond 5P: 2 DRYWELLS

| | | | | | |
|---|---|---|---|---|---|
| Inflow Area = | 0.838 ac, | 39.44% Impervious, | Inflow Depth > | 2.15" | for 100-YEAR event |
| Inflow = | 3.53 cfs @ | 11.97 hrs, | Volume= | 0.150 af | |
| Outflow = | 1.28 cfs @ | 12.09 hrs, | Volume= | 0.150 af, | Atten= 64%, Lag= 7.2 min |
| Discarded = | 1.28 cfs @ | 12.09 hrs, | Volume= | 0.150 af | |

Routing by Stor-Ind method, Time Span= 5.00-20.00 hrs, dt= 0.05 hrs
Peak Elev= 7.07' @ 12.09 hrs Surf.Area= 916 sf Storage= 1,736 cf

Plug-Flow detention time= 11.5 min calculated for 0.150 af (100% of inflow)
Center-of-Mass det. time= 11.4 min ( 813.5 - 802.1 )

| Volume | Invert | Avail.Storage | Storage Description |
|---|---|---|---|
| #1 | 0.00' | 2,401 cf | **10.00'D x 10.00'H Vertical Cone/Cylinder Z=1.0** x 2<br>6,807 cf Overall - 804 cf Embedded = 6,003 cf x 40.0% Voids |
| #2 | 1.00' | 804 cf | **8.00'D x 8.00'H Vertical Cone/Cylinder** x 2 Inside #1 |
| | | 3,205 cf | Total Available Storage |

| Device | Routing | Invert | Outlet Devices |
|---|---|---|---|
| #1 | Discarded | 0.00' | **45.000 in/hr Exfiltration over Wetted area** |

**Discarded OutFlow** Max=1.28 cfs @ 12.09 hrs HW=7.05' (Free Discharge)
**1=Exfiltration** (Exfiltration Controls 1.28 cfs)

## Summary for Pond 6i: EXIST. INFILTRATION SWALE

| | | | | | |
|---|---|---|---|---|---|
| Inflow Area = | 0.653 ac, | 37.78% Impervious, | Inflow Depth > | 2.07" | for 100-YEAR event |
| Inflow = | 3.00 cfs @ | 11.90 hrs, | Volume= | 0.113 af | |
| Outflow = | 2.25 cfs @ | 11.95 hrs, | Volume= | 0.113 af, | Atten= 25%, Lag= 3.0 min |
| Discarded = | 2.02 cfs @ | 11.96 hrs, | Volume= | 0.112 af | |
| Primary = | 0.23 cfs @ | 11.95 hrs, | Volume= | 0.001 af | |

Routing by Stor-Ind method, Time Span= 5.00-20.00 hrs, dt= 0.05 hrs
Peak Elev= 3.94' @ 11.96 hrs Surf.Area= 390 sf Storage= 615 cf

Plug-Flow detention time= 2.0 min calculated for 0.113 af (100% of inflow)
Center-of-Mass det. time= 1.9 min ( 802.5 - 800.6 )

| Volume | Invert | Avail.Storage | Storage Description |
|---|---|---|---|
| #1 | 0.00' | 624 cf | **2.00'W x 195.00'L x 4.00'H Prismatoid**<br>1,560 cf Overall x 40.0% Voids |

| Device | Routing | Invert | Outlet Devices |
|---|---|---|---|
| #1 | Discarded | 0.00' | **45.000 in/hr Exfiltration over Wetted area** |
| #2 | Primary | 3.90' | **1.5" x 4.5" Horiz. Orifice/Grate X 18.00** C= 0.600<br>Limited to weir flow at low heads |

**Discarded OutFlow** Max=1.99 cfs @ 11.96 hrs HW=3.85' (Free Discharge)
└**1=Exfiltration** (Exfiltration Controls 1.99 cfs)

**Primary OutFlow** Max=0.21 cfs @ 11.95 hrs HW=3.92' (Free Discharge)
└**2=Orifice/Grate** (Weir Controls 0.21 cfs @ 0.50 fps)

## Summary for Pond 6P: EXIST. DRYWELL

| | | | | | |
|---|---|---|---|---|---|
| Inflow Area = | 0.653 ac, | 37.78% Impervious, | Inflow Depth = | 0.02" | for 100-YEAR event |
| Inflow = | 0.23 cfs @ | 11.95 hrs, Volume= | 0.001 af | | |
| Outflow = | 0.11 cfs @ | 11.98 hrs, Volume= | 0.001 af, | Atten= 53%, | Lag= 1.7 min |
| Discarded = | 0.11 cfs @ | 11.98 hrs, Volume= | 0.001 af | | |

Routing by Stor-Ind method, Time Span= 5.00-20.00 hrs, dt= 0.05 hrs
Peak Elev= 0.45' @ 11.98 hrs Surf.Area= 93 sf Storage= 16 cf

Plug-Flow detention time= 2.0 min calculated for 0.001 af (100% of inflow)
Center-of-Mass det. time= 2.4 min ( 719.4 - 717.0 )

| Volume | Invert | Avail.Storage | Storage Description |
|---|---|---|---|
| #1 | 0.00' | 425 cf | **10.00'D x 6.00'H Vertical Cone/Cylinder Z=1.0**<br>1,263 cf Overall - 201 cf Embedded = 1,062 cf x 40.0% Voids |
| #2 | 1.00' | 201 cf | **8.00'D x 4.00'H Vertical Cone/Cylinder** Inside #1 |
| | | 626 cf | Total Available Storage |

| Device | Routing | Invert | Outlet Devices |
|---|---|---|---|
| #1 | Discarded | 0.00' | **45.000 in/hr Exfiltration over Wetted area** |

**Discarded OutFlow** Max=0.10 cfs @ 11.98 hrs HW=0.39' (Free Discharge)
└**1=Exfiltration** (Exfiltration Controls 0.10 cfs)

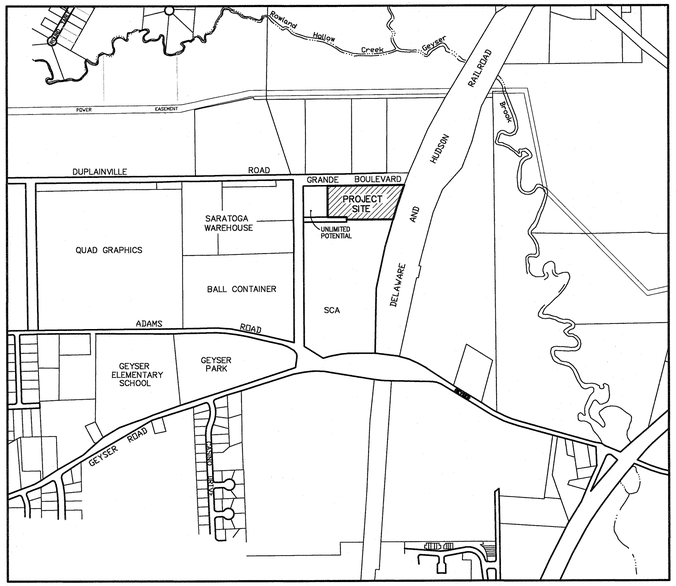


Location Plan Scale: 1" = 800'

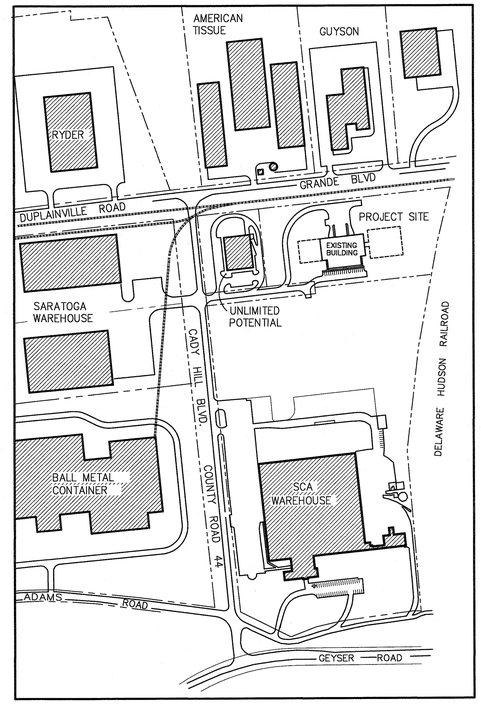


Vicinity Plan Not to Scale

## AREA REQUIREMENTS

| | DISTRICT | MINIMUM LOT SIZE | MINIMUM MEAN WIDTH (FEET) | MAXIMUM PERCENTAGE OF LOT TO BE OCCUPIED | | MINIMUM YARD DEMENSION (FEET) | | | | PRINCIPAL BUILDINGS | | ACCESSORY BUILDINGS MINIMUM DISTANCE TO (FEET) | | | | |
|---|---|---|---|---|---|---|---|---|---|---|---|---|---|---|---|---|
| | | | | PRINCIPAL BUILDING | ACCESSORY BUILDING | FRONT | SIDE | TOTAL SIDE | REAR | MIMIMUM 1st FLOOR AREA (SF) | MAXIMUM HEIGHT (FEET) | PRINCIPAL BUILDING | FRONT LOT LINE | FRONT LOT | SIDE LOT LINE | MIMIMUM % OF LOT TO BE PERMEABLE |
| REQUIRED | IND-G | 40,000 SF | 200' | 40% | 30% | 40 | 15 | 30 | 15 | – | 50 | 10 | 40 | 40 | 10 | 30% |
| EXISTING | | 301,605 SF | 819.1' | 8.6% | 0 | 70.1 | 304.5+263.5 | 569.6 | 167.4 | 26,120 SF | 0 | – | – | – | – | 78.1% |
| PROPOSED | | 301,605 SF | 819.1' | 18.6% | 0 | 70.1 | 163.5+139.2 | 302.7 | 152.4 | 56,020 sf | – | – | – | – | – | 60.1% |

## SITE STATISTICS

TAX MAP PARCEL – 178.00-1-50.1
ZONING: IND-G – GENERAL INDUSTRIAL
PROPOSED USE: LIGHT INDUSTRIAL
SITE AREA: 6.9 ACRES (301,605 sf)

### PROPOSED SITE UTILIZATION

BUILDING AREA: 56,020 sf = 18.6%
PAVEMENTS: 64,103 sf = 21.3%
PERMEABLE AREA: 181,482 sf = 60.1% (30% REQUIRED)

### PROPOSED PARKING AND LOADING

–PROPOSED LOADING: 12 LOADING DOCKS AT REAR OF BUILDING PLUS 4 GRADE ACCESS VEHICLE DOORS AT REAR OF BUILDING

–REQUIRED PARKING: 1 per 2 EMPLOYEES (40) = 20
PLUS 1 per COMPANY VEHICLE (3) = 21 REQUIRED TOTAL

PROPOSED PARKING: 23 SPACES
1 ACCESSIBLE PARKING SPACE PROVIDED

## NOTES

1. BASE INFORMATION FOR THIS PLAN WAS TAKEN FROM A BOUNDARY AND TOPOGRAPHIC SURVEY PREPARED BY AZIMUTH SURVEYING AND CARTOGRAPHY, JAMES WHITE LAND SURVEYOR, DATED MAY 2, 2005.
2. FOR PROPERTY LINE AND EXISTING CONDITIONS INFORMATION SEE "AS-BUILT 3 UNLIMITED DRIVE" MAP INCLUDED AT THE END OF THIS SET.
3. UTILITY LOCATIONS INDICATED ON THIS PLAN ARE APPROXIMATE. THE CONTRACTOR SHALL NOTIFY ALL UTILITY OWNERS PRIOR TO THE COMMENCEMENT OF WORK. THE CONTRACTOR SHALL VERIFY THE ACCURATE LOCATIONS IN THE FIELD AND NOTIFY THE ENGINEER OF ANY DISCREPANCIES.
4. THE CONTRACTOR SHALL STAKEOUT ALL PROPOSED WORK, INCLUDING FINISHED GRADE ELEVATIONS, PRIOR TO THE START OF CONSTRUCTION AND NOTIFY THE ENGINEER OF ANY DISCREPANCIES. THE CONTRACTOR SHALL NOT PROCEED WITH THE WORK UNTIL THE THE STAKEOUT HAS MET THE SATISFACTION OF THE ENGINEER AND THE OWNER,
5. THE CONTRACTOR SHALL PROTECT EXISTING PAVEMENTS AND IMPROVEMENTS TO REMAIN FROM DAMAGE DURING DEMOLITION AND CONSTRUCTION ACTIVITIES.

## CITY OF SARATOGA SPRINGS STANDARD NOTES

1. ALL WORK MUST CONFORM TO ALL FEDERAL, STATE AND CITY CODES, SPECIFICATIONS, ORDINANCES, RULES AND REGULATIONS.
2. THE ELEVATION BASE FOR THE CONTOURS AND BENCHMARKS ARE BASED ON THE NATIONAL GEODETIC VERTICAL DATUM, 1929.
3. ALL REFUSE, DEBRIS AND MISCELLANEOUS ITEMS TO BE REMOVED SHALL BE LEGALLY DISPOSED OF OFF-SITE BY THE CONTRACTOR TO A LOCATION APPROVED BY THE CITY ENGINEER.
4. THE CONTRACTOR MUST SET UP A PRE-CONSTRUCTION MEETING WITH THE CITY ENGINEER PRIOR TO ANY CONSTRUCTION. CONSTRUCTION INSPECTIONS BY THE DESIGN PROFESSIONAL ARE REQUIRED. THE COST OF THE CONSTRUCTION INSPECTIONS IS THE RESPONSIBILITY OF THE APPLICANT/DEVELOPER.
5. THE CONTRACTOR MUST OBTAIN A BLASTING PERMIT FROM THE BUILDING INSPECTOR IF ANY BLASTING IS REQUIRED FOR THE PROJECT.
6. THE CONTRACTOR MUST OBTAIN A STREET OPENING PERMIT ISSUED BY THE DEPARTMENT OF PUBLIC WORKS FOR ANY WORK IN THE STREET OR RIGHT-OF-WAY OF ANY CITY STREET ROAD OR ALLEY.
7. ALL POINTS OF CONSTRUCTION INGRESS OR EGRESS SHALL BE MAINTAINED TO PREVENT TRACKING OR FLOWING OF SEDIMENT OR DEBRIS ONTO A PUBLIC ROAD.
8. A CERTIFICATE OF OCCUPANCY CANNOT BE ISSUED UNTIL ALL SITE WORK IS COMPLETED IN ACCORDANCE WITH THE APPROVED PLANS: AND AN AS-BUILT DRAWING HAS BEEN PREPARED IN ACCORDANCE WITH THE REQUIREMENTS OF THE CITY ENGINEER.

NOTICE
CALL BEFORE YOU DIG
DIG SAFELY NEW YORK
1-800-962-7962
48 HOURS NOTICE REQUIRED

## LIST OF DRAWINGS


SP-1 SITE LOCATION PLAN AND SITE DATA
SP-2 SITE LAYOUT PLAN
SP-3 SITE GRADING AND DRAINAGE PLAN
SP-4 EROSION AND SEDIMENT CONTROL PLAN
AS-BUILT – 3 UNLIMITED DRIVE


Planning Board No. 16.0

APPROVED UNDER AUTHORITY OF A RESOLUTION ADOPTED _____ BY THE PLANNING BOARD OF THE CITY OF SARATOGA SPRINGS

_____ CHAIRMAN

DATE SIGNED _____


GENERAL CONTRACTORS EST. 1972 Munter ENTERPRISE, INC.

Nace Engineering, PC
CIVIL ENGINEERS
169 Haviland Road
Queensbury, NY 12804
(518) 745-4400
FAX (518) 792-8511


# SLACK CHEMICAL COMPANY EXPANSION

3 Unlimited Drive, City of Saratoga Springs, Saratoga County, New York

Owner/Applicant: Slack Chemical Company
3 Unlimited Drive, Saratoga Springs NY 12866

SITE LOCATION PLAN

Date: October 24, 2016

Revisions

SP-1

SHEET 1 OF 4

LANDS N/F OF GRANDE

N83° 54' 00"E 881.41'

EXISTING TREES TO REMAIN

LAWN

15' SETBACK

EXISTING STONE SURFACE

STONE SURFACE (B)

3 PK SPACES

21 22 23

30'R 20'R 40'R 29.0' 41.0' 54.0' 7.0' 14.0' 27.0' 55.0' 24.0' 10.0' 6.0' 4.0' 20' 150' 200' 100' 130' 153' 40' 60'R

ASPHALT (A)

RETAINING WALL (C)

EROSION CONTROL MAT (E)

EXISTING ASPHALT

EXISTING STONE SURFACE LOADING AREA

4 LOADING DOCKS

EAVE TRENCH (D)

3 BUILDING MOUNTED CUT OFF LIGHTS MATCH EXISTING

4 EXISTING BUILDING MOUNTED CUT OFF LIGHTS

PROPOSED ADDITION 10,000 SF

WAREHOUSE

EXISTING BUILDING 26,120 sf

WAREHOUSE 20,000 SF

OFFICE 6,120 SF

PROPOSED ADDITION 19,900 SF

WAREHOUSE

25' NO CUT BUFFER TO PROTECT KARNER BLUE BUTTERFLY HABITAT LOCATED WITHIN THE UTILITY EASEMENT PER AGREEMENT WITH NYS DEC

EXISTING TREES TO BE REMOVED

3 CRABAPPLE TO REMAIN MOVE ONE AS NECESSARY

4 EXISIING WALKWAY LIGHTS EXISIING PLANTING

EXISTING SIDEWALK

EXISTING FREESTANDING SIGN & PLANTING

2 MAPLES TO REMAIN

EXISTING WATER SERVICE

EXISTING ASPHALT

15' SETBACK

40' SETBACK

N06° 06' 00"W 350.00'

92.0' 22.3' 43.2'

139.2'

S13° 25' 20"W

581.85'

75' Utility Easement Granted to National Grid

UTILITY EASEMENT TO CITY OF SARATOGA SPRINGS

CONNECT TO EXISTING CAPPED

EXISTING SANITARY MANHOLE RIM 322.2 INV IN 315.70 INV OUT 315.80

LOT 1
301,605 SF = 6.9 ACRES

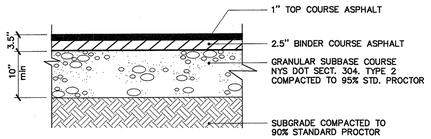


(A) ASPHALT PAVEMENT

NOT TO SCALE

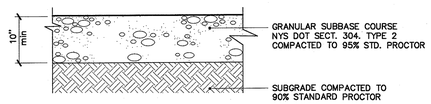


(B) STONE SURFACE

NOT TO SCALE

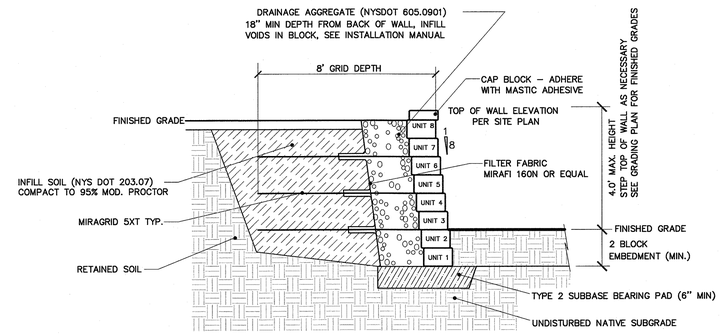


NOTE: WALL IS DETAILED AS ROCKWOOD WALL – CLASSIC 8 SYSTEM BY ROCKWOOD SYSTEMS OR APPROVED EQUAL COMPLY WITH MANUFACTURER'S DESIGN AND INSTALLATION RECOMMENDATIONS

(C) SEGMENTAL RETAINING WALL

NOT TO SCALE

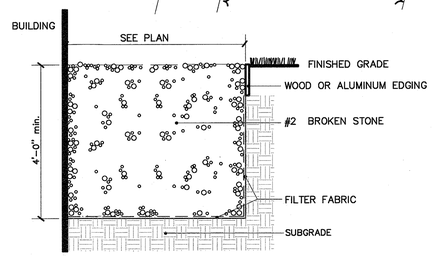


(D) EAVE TRENCH DETAIL

NOT TO SCALE

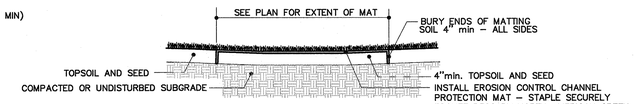


(E) EROSION CONTROL MAT

NOT TO SCALE

NOTICE
CALL BEFORE YOU DIG
DIG SAFELY NEW YORK
1-800-962-7962
48 HOURS NOTICE REQUIRED

## Legend

- EXISTING TREELINE
- TREES TO BE CLEARED
- EXISTING TREES
- EXISTING SEWER MANHOLE
- EXISTING SEWER MAIN
- PROPERTY LINE
- EXISTING HYDRANT
- EXISTING WATER VALVE
- EXISTING WATER MAIN
- DETAIL SYMBOL
- GRADING LIMIT LINE LIMITS OF CONSTRUCTION

Planning Board No. 16.0

APPROVED UNDER AUTHORITY OF A RESOLUTION ADOPTED _____ BY THE PLANNING BOARD OF THE CITY OF SARATOGA SPRINGS

_____ CHAIRMAN

DATE SIGNED _____

GENERAL CONTRACTORS EST. 1972 Munter ENTERPRISES, INC.


Nace Engineering, PC
CIVIL ENGINEERS
169 Haviland Road
Queensbury, NY 12804
(518) 745-4400
FAX (518) 792-8511


# SLACK CHEMICAL COMPANY EXPANSION

3 Unlimited Drive, City of Saratoga Springs, Saratoga County, New York

Owner/Applicant: Slack Chemical Company
3 Unlimited Drive, Saratoga Springs NY 12866

## SITE LALYOUT PLAN

NORTH
SCALE 1" = 30'

Date: October 24, 2016

Revisions

SP-2

SHEET 2 OF 4

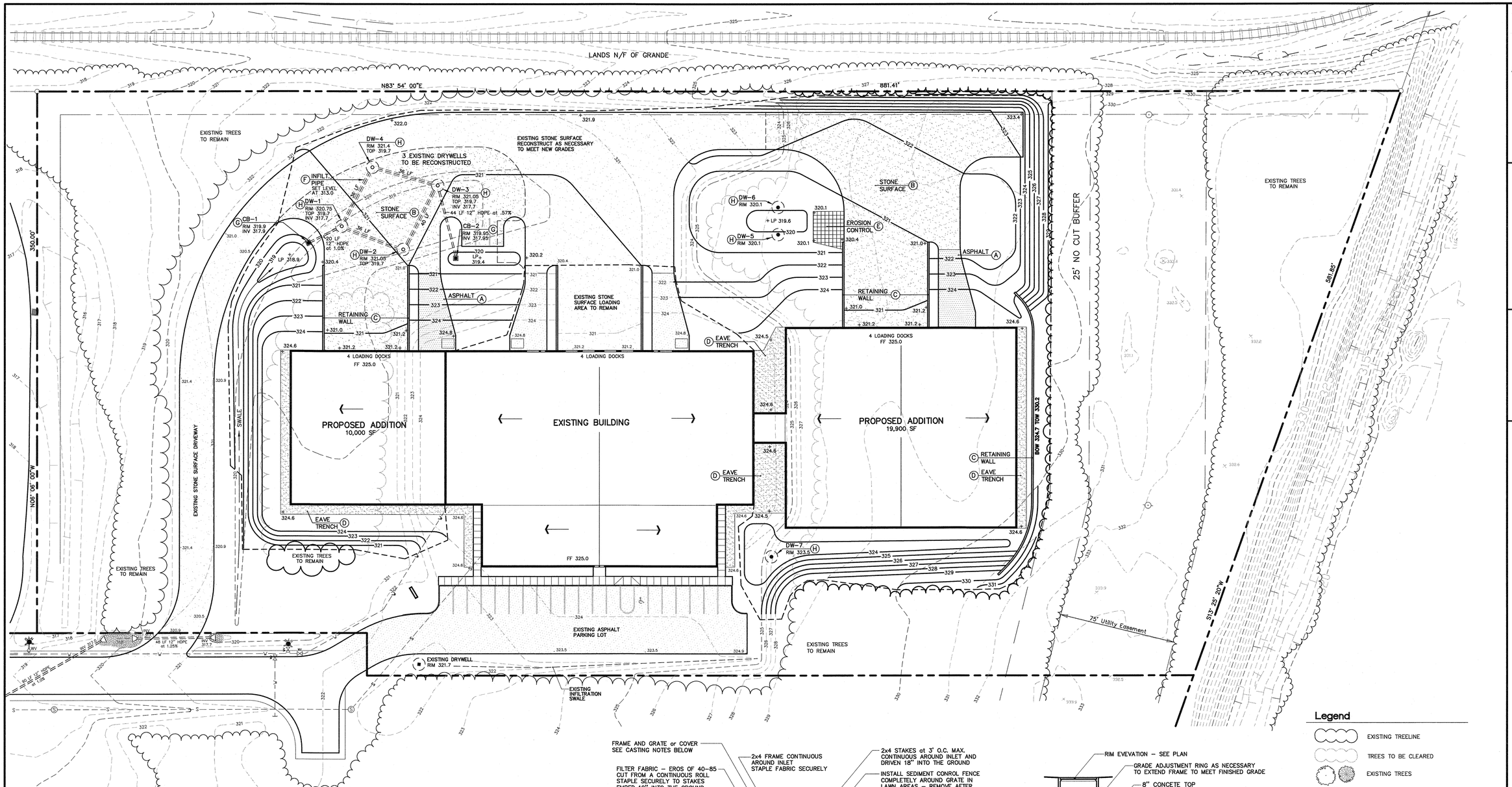


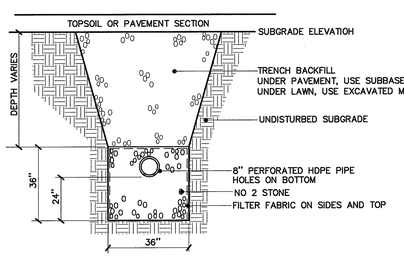


F INFILTRATION PIPE DETAIL

NOT TO SCALE

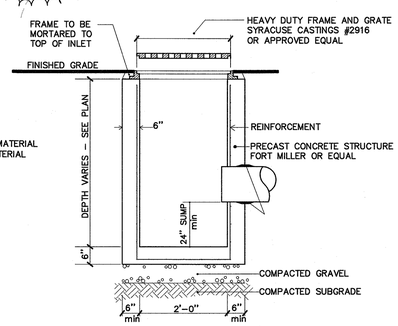


G CATCH BASIN – SQUARE

NOT TO SCALE

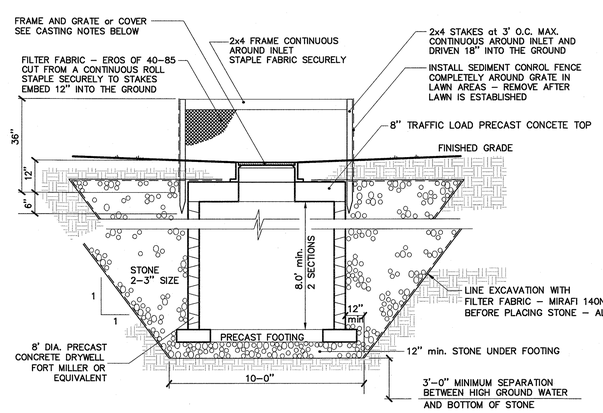


H 8' X 8' DEEP DRYWELL

NOT TO SCALE

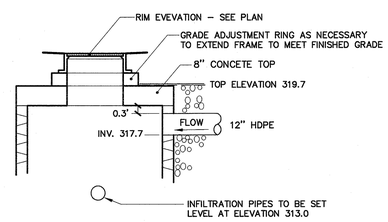


DRYWELL IN PAVEMENT WITH PIPE DETAIL

**CASTING NOTES**

DRYWELLS NO. 1-4 TO RECEIVE A FRAME AND COVER NEENAH FOUNDRY MODEL R-1795-F OR APPROVED EQUAL

DRYWELLS NO. 5-7 TO RECEIVE A FRAME AND GRATE NEENAH FOUNDRY MODEL R-2554 OR APPROVED EQUAL

## Legend

- EXISTING TREELINE
- TREES TO BE CLEARED
- EXISTING TREES
- EXISTING SEWER MANHOLE
- EXISTING SEWER MAIN
- PROPERTY LINE
- EXISTING HYDRANT
- EXISTING WATER VALVE
- EXISTING WATER MAIN
- DETAIL SYMBOL
- 326 EXISTING CONTOUR LINE
- 326 NEW FINISHED GRADE CONTOUR LINE
- 321.4 EXISTING SPOT ELEVATION
- 324.9+ NEW FINISHED SPOT ELEVATION
- GRADING LIMIT LINE LIMITS OF CONSTRUCTION

Planning Board No. 16.0

APPROVED UNDER AUTHORITY OF A RESOLUTION ADOPTED _____ BY THE PLANNING BOARD OF THE CITY OF SARATOGA SPRINGS

_____ CHAIRMAN

DATE SIGNED _____

GENERAL CONTRACTORS EST. 1972 Munter ENTERPRISES, INC.


Miller Associates
LANDSCAPE ARCHITECTS

Nace Engineering, PC
CIVIL ENGINEERS

169 Haviland Road
Queensbury, NY 12804
(518) 745-4400
FAX (518) 792-8511


# SLACK CHEMICAL COMPANY EXPANSION

3 Unlimited Drive, City of Saratoga Springs, Saratoga County, New York

Owner/Applicant: Slack Chemical Company
3 Unlimited Drive, Saratoga Springs NY 12866

## GRADING AND DRAINAGE PLAN

NORTH
SCALE 1" = 30'

Date: October 24, 2016

Revisions

SP-3

SHEET 3 OF 4

## LEGEND

- EXISTING CONTOUR
- PROPOSED CONTOUR
- SEDIMENT CONTROL FENCE
- TREE LINE – LIMITS OF CLEARING
- TEMPORARY SEDIMENT TRAP

GRADE THE TEMPORAY SEDIMENT TRAP (BASIN) TO THE SIZE INDICATED TO COLLECT RUNOFF AND SEDIMENT FROM THE CONSTRUCTION SITE. REMOVE THE SEDIMENT TRAPS AND COLLECTED SEDIMENT WHEN PERMANENT STORMWATER BASINS ARE INSTALLED.

- LIMITS OF DISTURBANCE

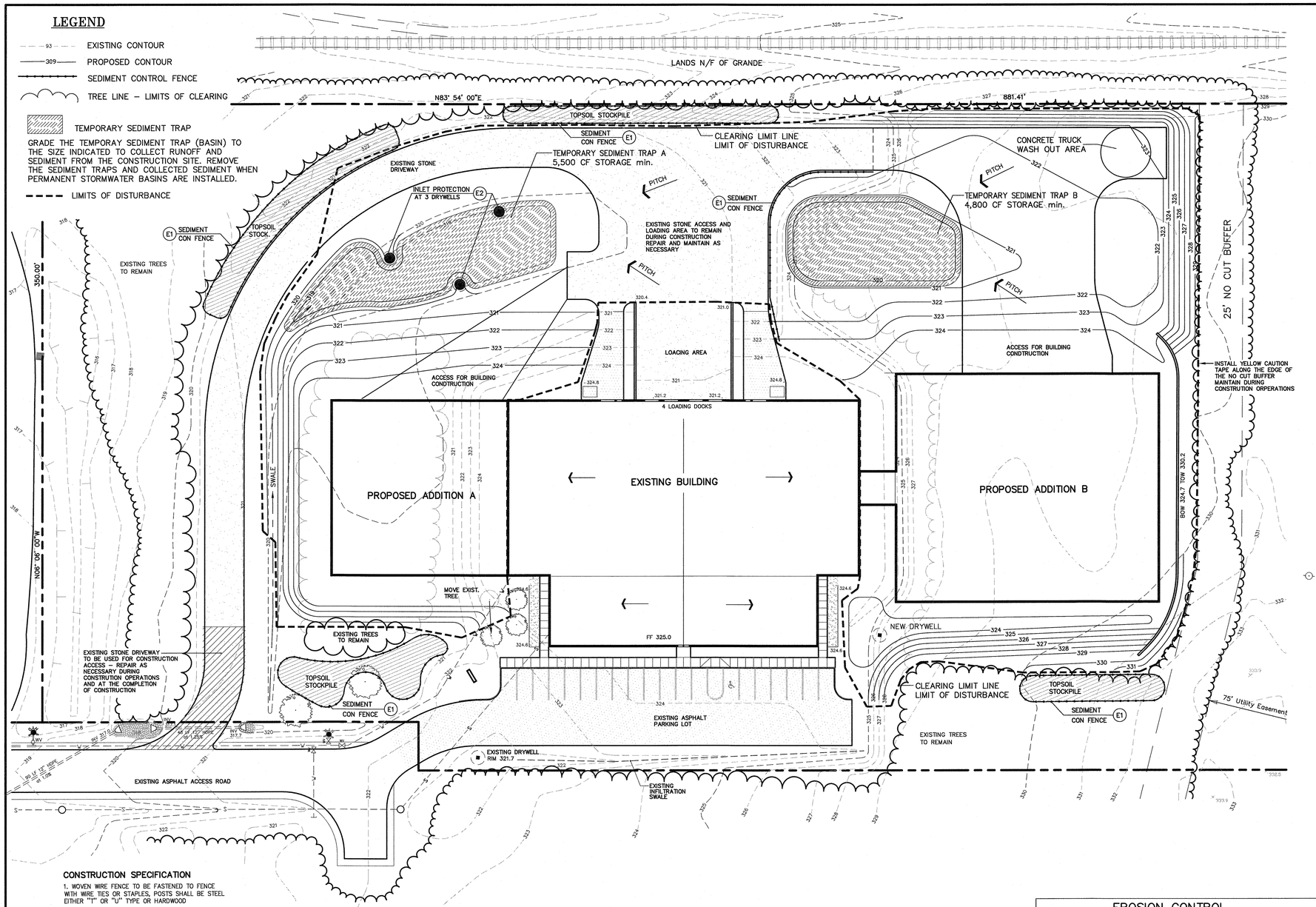


## S.W.P.P.P. REQUIREMENTS

1. THE CONTRACTOR UNDERTAKING SITE CONSTRUCTION OF THIS PROJECT MUST SIGN THE CERTIFICATION IN THE SWPPP AND BE FAMILIAR WITH ALL REQUIREMENTS OF THE SWPPP AND REQUIREMENTS OF THE NYS DEC SPDES GENERAL PERMIT FOR STORMWATER DISCHARGES FROM CONSTRUCTION ACTIVITY – PERMIT No. GP-0-10-001.

2. THE CONTRACTOR IS SOLEY RESPONSIBLE TO COMPLY WITH THE TERMS OF THE NYS DEC SPDES GENERAL PERMIT FOR STORMWATER DISCHARGES FROM CONSTRUCTION ACTIVITY – PERMIT No. GP-0-10-001. COPIES OF THE GENERAL PERMIT ARE AVAILABLE BY CALLING DEC (518) 402-8109 AND ON LINE.

3. A NOTICE OF INTENT (NOI) MUST BE SUBMITTED TO DEC PRIOR TO INITIATING WORK.

4. THE SWPPP INCLUDES INFORMATION ON ALL DRAWINGS SP-1 TO SP-4 AND THE STORMWATER MANAGEMENT REPORT.

5. PRIOR TO COMMENCEMENT OF CONSTRUCTION, THE CONTRACTOR SHALL HAVE THE ENGINEER CONDUCT AN ASSESSMENT OF THE SITE AND CERTIFY IN AN INSPECTION REPORT THAT THE APPROPRIATE EROSION AND SEDIMENT CONTROLS HAVE BEEN ADEQUATELY INSTALLED. FOLLOWING COMMENCEMENT OF CONSTRUCTION, THE ENGINEER SHALL MAKE WEEKLY SITE INSPECTIONS AND INSPECTIONS AND PREPARE A REPORT AS REQUIRED BY THE GP-0-10-001. THE CONTRACTOR SHALL IMMEDIATELY REVIEW THE ENGINEER'S REPORT AND ADDRESS ALL ITEMS REQUIRING ATTENTION.

6. THE CONTRACTOR SHALL MAINTAIN A RECORD OF ALL INSPECTION REPORTS IN A SITE LOG BOOK, MAINTAINED ON SITE AND AVAILABLE TO THE PERMITTING AUTHORITY UPON REQUEST.

5. AT COMPLETION OF CONSTRUCTION, THE CONTRACTOR SHALL PERFORM A FINAL INSPECTION TO CERTIFY THAT THE SITE HAS UNDERGONE FINAL STABILIZATION AND THAT ALL TEMPORARY EROSION AND SEDIMENTATION CONTROLS HAVE BEEN REMOVED. UPON CERTIFICATION OF COMPLETION A NOTICE OF TERMINATION (NOT) SHALL BE SUBMITTED TO NYS DEC.

## MAINTENANCE

1. SEDIMENT SHALL BE REMOVED FROM SEDIMENT TRAPS WHENEVER THEIR CAPACITY HAS BEEN REDUCED BY 50%.

2. ALL EROSION AND SEDIMENT CONTROL DEVICES SHALL BE INSPECTED WITHIN 24 HOURS OF A STORM EVENT AND REPAIRED AND/OR MODIFIED AS REQUIRED TO BE GOOD WORKABLE CONDITION.

3. THE CONTRACTOR SHALL CONDUCT AN INSPECTION OF THE SITE ON A DAILY BASIS TO COLLECT LITTER AND CONSTRUCTION DEBRIS AND DISPOSE OF LEGALLY.

4. ANY STOCKPILES OF FILL, TOPSOIL, EXCAVATED MATERIAL SHALL BE COVERED OR CONTAINED BY SEDIMENT CONTROL FENCE TO PREVENT EROSION.

## STABILIZATION

1. THE CONTRACTOR SHALL INITIATE STABILIZATION MEASURES AS SOON AS PRACTICABLE IN PORTIONS OF THE SITE WHERE ACTIVITIES HAVE TEMPORARILY OR PERMANENTLY CEASED, BUT IN NO CASE MORE THAN 14 DAYS.

2. STABILIZATION OF GRASS AREAS INCLUDES HYROSEEDING USING TACKIFIER ON SLOPES OVER 5:1 OR SEEDING AND INSTALLING A CONTINUOUS COVER OF STRAW MULCH WATERED INTO PLACE.

3. AREAS TO BE STABILIZED BY SEEDING SHALL BE SEEDED WITH AN ANNUAL RYEGRASS MIX OR OTHER APPROVED MIX, AT A RATE OF 5lbs PER 1000 sf, STARTER FERTILIZER (5-10-5) AT 40LBS PER 1,000 sf AND MULCHED WITH 3" min. STRAW OR HYDROSEEDED.

## CONSTRUCTION SEQUENCING

1. THE PROJECT SITE IS TO BE DEVELOPED IN ONE PHASE.

2. THE LIMITS OF CLEARING AND GRADING SHALL BE STAKED BY A LAND SURVEYOR.

3. THE CONTRACTOR SHALL USE THE EXISTING STONE DRIVEWAY FOR THE CONSTRUCTION ROAD ENTRANCE. THE STONE DRIVEWAY MUST BE MAINTAINED AND REPAIRED AS NECESSARY DURING CONSTRUCTION AND AT THE END OF CONSTRUCTION.

4. THE CONTRACTOR SHALL CLEAR THE SITE AND REMOVE TIMBER AND DEBRIS.

5. PRIOR TO THE START OF GRADING OPERATIONS, THE CONTRACTOR SHALL INSTALL SEDIMENT CONTROL FENCING AND TEMPORARY INLET PROTECTION AS INDICATED.

6. THE CONTRACTOR SHALL COMPLETE GRUBBING OPERATIONS AND REMOVE STUMPS FROM THE SITE. TOPSOIL TO BE STRIPPED AND STOCKPILED FOR REUSE. EXCESS TOPSOIL IS TO BE REMOVED FROM THE SITE ASAP.

7. TEMPORARY SEDIMENT TRAP "A" SHALL BE GRADED AND COMPLETED TO ACCEPT RUNOFF FROM PROPOSED BUILDING AND PAVEMENT AREAS.

8. THE SITE SHALL BE ROUGH GRADED. CUT AND FILL OPERATIONS SHALL BE COMPLETED TO ESTABLISH ROUGH SUBGRADE ELEVATIONS. FILL SHALL BE PLACED IN LOW AREA AS INDICATED ON THE GRADING PLAN AND COMPACTED. THE SUBGRADE FOR BUILDING ADDITION "A" SHALL BE ESTABLISHED AND SURROUNDING SITE AREA GRADED TO ESTABLISH FINAL SUBGRADE ELEVATIONS.

9. INSTALL YELLOW CAUTION TAPE ALONG THE CLEARING/GRADING LIMITS ON THE EAST SIDE OF THE SITE ALONG THE NO CUT BUFFER AREA.

10. TEMPORARY SEDIMENT TRAP "B" IS TO BE GRADED TO ACCEPT STORMWATER RUNOFF FROM PROPOSED BUILDING AND PAVEMENT AREAS. THE TEMPORARY SEDIMENT TRAPS SHALL BE SEEDED WITH PERENNIAL RYEGRASS AT 5 lbs. PER 1,000 SF.

11. THE EAST SIDE OF THE SITE SHALL BE ROUGH GRADED. CUT OPERATIONS SHALL BE COMPLETED TO ESTABLISH ROUGH SUBGRADE ELEVATIONS. THE SUBGRADE FOR BUILDING ADDITION "B" SHALL BE ESTABLISHED AND SURROUNDING SITE AREA GRADED TO ESTABLISH FINAL SUBGRADE ELEVATIONS. INSTALL THE RETAINING WALL ON THE EAST SIDE. EXCESS OR UNACCEPTABLE SOIL SHALL BE REMOVED FROM THE SITE ASAP.

12. WHEN SUBGRADE FOR PAVED AREAS ARE COMPLETE AND THE BUILDING ROOFS AND SIDING ARE COMPLETE, THE CONTRACTOR SHALL INSTALL EAVE TRENCHES CATCH BASINS AND DRYWELLS. INSTALL PROTECTION AT INLETS.

13. ALL LAWN AREAS SHALL BE TOPSOILED AND SEEDED. ALL DISTURBED AREAS SHALL BE SEEDED OR PLANTED.

14. FOLLOWING COMPLETION ALL PLANTING AND THE ESTABLISHMENT OF ALL GRASS AREAS, REMOVE ANY COLLECTED SEDIMENT AND REMOVE THE SEDIMENT CONTROL. REMOVE ANY DEBRIS FROM THE PERIMETER OF THE SITE AND DISPOSE OF ALL WASTE MATERIAL IN A LEGAL MANNER.

## AREA OF DISTURBANCE

SITE AREA: 301,605 SF = 6.9 ACRES
TOTAL DISTURBANCE: 120,310 sf = 2.8 ACRES
– NEW BUILDING AREA: 29,900 sf = 0.7 ACRES
– NEW PAVEMENT AREA: 24,214 sf = 0.6 ACRES

### CONSTRUCTION SPECIFICATION

1. WOVEN WIRE FENCE TO BE FASTENED TO FENCE WITH WIRE TIES OR STAPLES, POSTS SHALL BE STEEL EITHER "T" OR "U" TYPE OR HARDWOOD

2. FILTER CLOTH TO BE FASTENED SECURELY TO WOVEN WIRE FENCE WITH TIES SPACED EVERY 24" AT TOP AND MID SECTION. FENCE SHALL BE WOVEN WIRE, 6" MAXIMUM MESH OPENING.

3. WHEN TWO SECTIONS OF FILTER CLOTH ADJOIN EACH OTHER, THEY SHALL BE OVERLAPPED BY SIX INCHES AND FOLDED. FILTER CLOTH SHALL BE EITHER FILTER X, MIRAFI 100X STABILINKA T140N OR APPROVED EQUAL.

4. PREFABRICATED UNITS SHALL BE GEOFAB, ENVIROFENCE OR APPROVED EQUAL.

5. MAINTENANCE SHALL BE PERFORMED AS NEEDED AND MATERIAL REMOVED WHEN "BULGES" DEVELOP IN THE SILT FENCE.

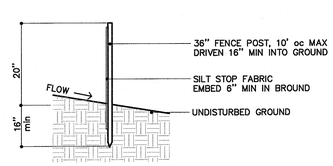


E1 SEDIMENT CONTROL FENCE

NOT TO SCALE

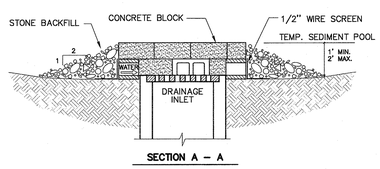


NOTES:
1. LAY ONE BLOCK ON EACH SIDE OF THE STRUCTURE ON ITS SIDE FOR DEWATERING. FOUNDATION SHALL BE 2 INCHES MIN. BELOW REST OF INLET AND BLOCKS SHALL BE PLACED AGAINST INLET FOR SUPPORT.

2. HARDWARE CLOTH OR 1/2" WIRE MESH SHALL BE PLACED OVER BLOCK OPENINGS TO SUPPORT STONE.

3. USE CLEAN STONE OR GRAVEL 1/2 – 3/4 INCH IN DIAMETER PLACED 2 INCHES BELOW TOP OF THE BLOCK ON A 2:1 OR FLATTER SLOPE.

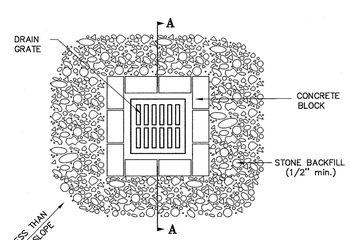


E2 STONE & BLOCK INLET PROTECTION

NOT TO SCALE

### EROSION CONTROL IMPLEMENTATION SCHEDULE

| PRACTICE | IMPLEMENTATION TIME | DURATION OF PRACTICE |
|---|---|---|
| SEDIMENT CONTROL FENCE | PRIOR TO CLEARING AND SOIL DISTURBANCE | ENTIRE PROJECT (REMOVE AFTER FINAL SITE STABILIZATION AND VEGETATION ESTABLISHMENT) |
| INLET PROTECTION | PRIOR TO INITIAL SOIL DISTURBANCE | ENTIRE PROJECT (REMOVE PRIOR TO FINAL DRIVEWAY FINISHING) |
| SEDIMENT TRAP | DURING INITIAL SITE GRADING & EXCAVATION | UNTIL FINAL SITE GRADING AND CONSTRUCTION OF STORMWATER BASINS |
| TEMPORARY SEEDING & MULCHING | AFTER INITIAL SITE GRADING | UNTIL FINAL GRADING AND VEGETATION ESTABLISHMENT |
| DRYWELLS AND INFILTRATION SWALES | AFTER FINAL SITE GRADING | PERMANENT |
| SEEDING & OTHER VEGETATION STABILIZATION | AFTER FINAL SITE GRADING | PERMANENT |

NOTE: EROSION AND SEDIMENT CONTROLS DEPICTED HEREON ARE INTENDED TO PROVIDE A GENERAL UNDERSTANDING OF THE REQUIRED WORK. ADDITIONAL EROSION AND SEDIMENT CONTROL MEASURES MAY BE REQUIRED DURING CONSTRUCTION AND WILL BE EMPLOYED AS NECESSARY TO PREVENT EROSION AND SEDIMENTATION FROM DISCHARGING OFF SITE.

Planning Board No. 16.0

APPROVED UNDER AUTHORITY OF A RESOLUTION ADOPTED _____ BY THE PLANNING BOARD OF THE CITY OF SARATOGA SPRINGS

_____ CHAIRMAN

DATE SIGNED _____

GENERAL CONTRACTORS EST. 1973 Munter ENTERPRISE, INC.


Miller Associates
LANDSCAPE ARCHITECTS

Nace Engineering, PC
CIVIL ENGINEERS

169 Haviland Road
Queensbury, NY 12804
(518) 745-4400
FAX (518) 792-8511


**SLACK CHEMICAL COMPANY EXPANSION**
3 Unlimited Drive, City of Saratoga Springs, Saratoga County, New York
Owner/Applicant: Slack Chemical Company
3 Unlimited Drive, Saratoga Springs NY 12866

EROSION AND SEDIMENT CONTROL PLAN

NORTH
SCALE 1" = 30'

Date: October 24, 2016

Revisions

SP-4

SHEET 4 OF 4

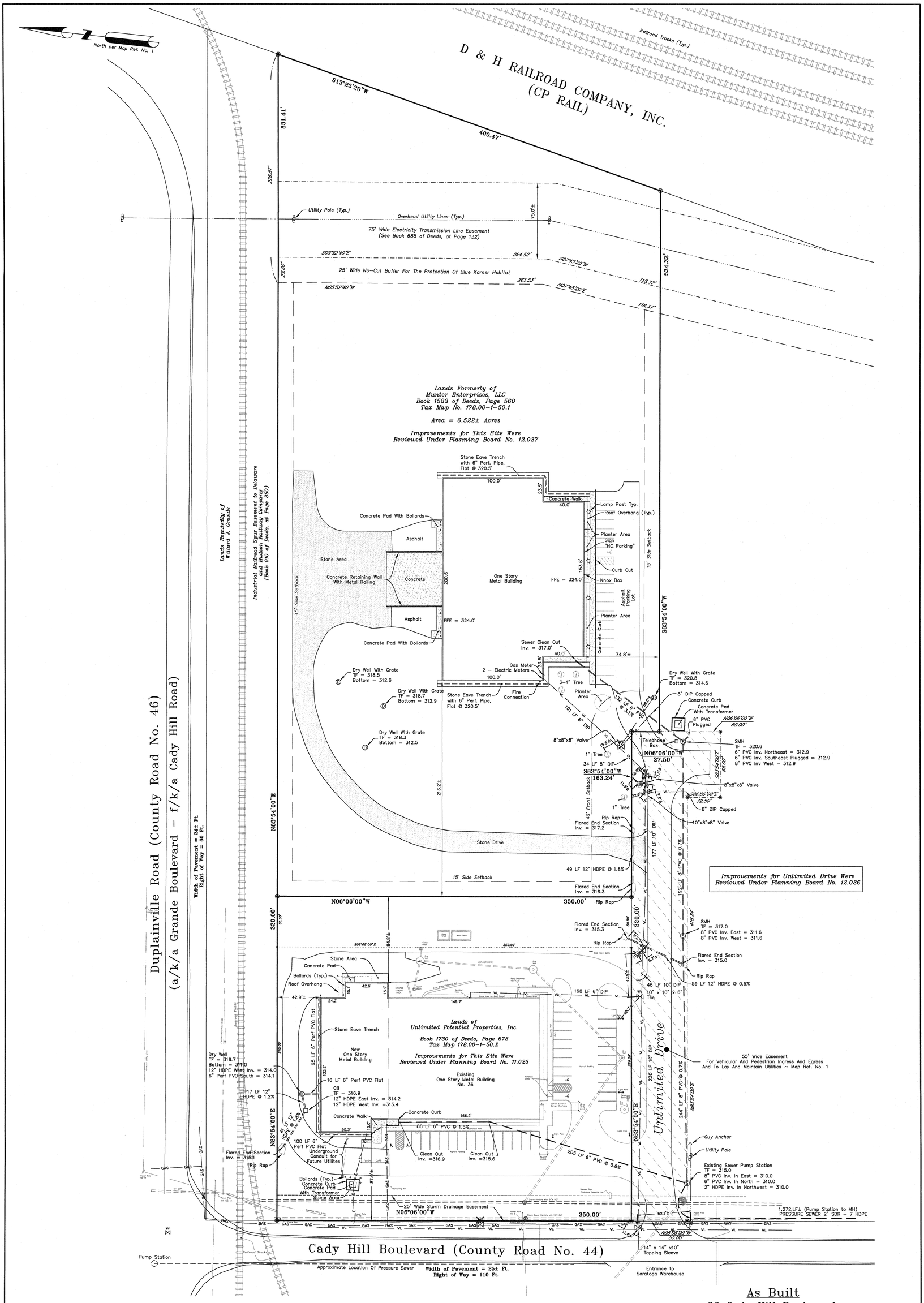


# As Built

## 36 Cady Hill Boulevard, 3 Unlimited Drive, and Unlimited Drive

**PLANTING CERTIFICATION:**

THE EXISTING PLANTING MEETS OR EXCEEDS THE PLANTING PLAN SHOWN ON THE APPROVED PLANS ASSOCIATED WITH PLANNING BOARD PROJECTS 11.025, 12.036, AND 12.037.

THOMAS W. NACE P.E. NYS LIC. NO. 055150

**CERTIFICATION:**

I, THOMAS W. NACE, REGISTERED PROFESSIONAL ENGINEER NO. 055150, IN THE STATE OF NEW YORK, WAS RETAINED BY MUNTER ENTERPRISES, LLC, TO UNDERTAKE PERIODIC INSPECTIONS AND HEREBY CERTIFY THAT THE IMPROVEMENTS SHOWN ON THIS DRAWING ARE IN CONFORMANCE WITH THE APPROVED DRAWINGS AND SPECIFICATIONS OR ANY AUTHORIZED CHANGES, AND SHOW THE ACTUAL FACILITIES AND INFRASTRUCTURE AS THEY WERE INSTALLED IN THE FIELD.

THOMAS W. NACE P.E. NYS LIC. NO. 055150

STATE OF NEW YORK · JASON M. TOMMELL · 50605 · LICENSED PROFESSIONAL ENGINEER · LICENSED LAND SURVEYOR

JASON M. TOMMELL
P.L.S. LIC. NO. 50,605

TOMMELL & ASSOCIATES
28 CLINTON STREET, SUITE 1
SARATOGA SPRINGS, NY 12866
PH: (518) 587-3149 FAX: (518) 587-7251

PB Nos.: 11.025, 12.036, 12.037
SCALE: 1" = 40'

CITY OF SARATOGA SPRINGS (OD)
SARATOGA COUNTY, NEW YORK
SEPTEMBER 30, 2014

MAP NO: 140048.04

COPYRIGHT © 2013
TOMMELL & ASSOCIATES
UNAUTHORIZED ALTERATION OR ADDITION TO THIS DOCUMENT IS VIOLATION OF SECTION 7209, SUBDIVISION 2, OF NEW YORK STATE EDUCATION LAW. PERMISSION IS GIVEN TO REPRODUCE THIS DOCUMENT IN ITS ENTIRETY AS PART OF A TITLE REPORT OR ABSTRACT OF TITLE.

# CITY OF SARATOGA SPRINGS

ZONING BOARD OF APPEALS

CITY HALL - 474 BROADWAY
SARATOGA SPRINGS, NEW YORK 12866
PH) 518-587-3550 FX) 518-580-9480
WWW.SARATOGA-SPRINGS.ORG



Bill Moore, *Chair*
Keith B. Kaplan, *Vice Chair*
Adam McNeill, *Secretary*
Gary Hasbrouck
George "Skip" Carlson
James Helicke
Susan Steer
Cheryl Grey, alternate
Oksana Ludd, alternate


November 9, 2016

Mark Torpey, Chair
Planning Board
City Hall - 474 Broadway
Saratoga Springs, NY 12866

Re: Recommendation request for Southern Subdivision – 124 York Avenue

Dear Mark,

On November 7, 2016 the Zoning Board of Appeals (ZBA) heard the following application:

> #2925 SOUTHERN SUBDIVISION, 124 York Avenue, area variance associated with a proposed two lot residential subdivision; seeking relief from the minimum lot size and minimum average lot width requirements for each of the lots in the Urban Residential – 3 District.

Per 8.4.6 of the City's Zoning Ordinance, "If a proposed subdivision plat contains one or more lots that do not comply with this Chapter and, therefore, require an area variance; the ZBA shall request that the Planning Board provide a written recommendation concerning the proposed variance".

Thank you for your consideration of this request and we look forward to your input.

Respectfully yours,

Bill Moore, Chair
Zoning Board of Appeals

# KIMBERLY AND MICHAEL SOUTHERN

# AREA VARIANCE APPLICATION

166.46-3-5

124 York Avenue

City of Saratoga Springs

Zoning Board of Appeals

Submission Date: September 26, 2016

Hearing Date: October 24, 2016


Prepared By:

M. Elizabeth Coreno, Esq.

Carter Conboy, PC

480 Broadway, Suite 250

Saratoga Springs, New York 12866

[redacted]


Carter Conboy

Attorneys at Law

# CITY OF SARATOGA SPRINGS

City Hall – 474 Broadway
Saratoga Springs, New York 12866
Tel: 518-587-3550 fax: 518-580-9480

[FOR OFFICE USE]

_____ (Application #)

_____ (Date received)

## APPLICATION FOR:
## APPEAL TO THE ZONING BOARD FOR AN INTERPRETATION, USE VARIANCE, AREA VARIANCE AND/OR VARIANCE EXTENSION

| | APPLICANT(S)* | OWNER(S) *(If not applicant)* | ATTORNEY/AGENT |
|---|---|---|---|
| Name | Kimberly and Michael Southern | | M. Elizabeth Coreno, Esq. |
| Address | [redacted] | | Carter Conboy<br>480 Broadway, Suite 250 |
| Phone | / | / | [redacted] |
| Email | | | |

* An applicant must be the property owner, lessee, or one with an option to lease or purchase the property in question.

Applicant's interest in the premises: ☑ Owner ☐ Lessee ☐ Under option to lease or purchase

PROPERTY INFORMATION

1. Property Address/Location: 124 York Avenue, Saratoga Springs Tax Parcel No.: 166 . 46 - 3 - 5
(*for example: 165.52 – 4 – 37*)

2. Date acquired by current owner: 8/28/2014 3. Zoning District when purchased: UR3

4. Present use of property: Residential 5. Current Zoning District: UR3

6. Has a previous ZBA application/appeal been filed for this property?
☐ Yes (when? _____ For what?_____)
☑ No

7. Is property located within (check all that apply)?: ☐ Historic District ☐ Architectural Review District
☐ 500' of a State Park, city boundary, or county/state highway?

8. Brief description of proposed action:
Applicants are seeking two small area variances for minimum lot size and minimum average width in order to subdivide the lot for a second buildable residential lot.

9. Is there a written violation for this parcel that is not the subject of this application? ☐ Yes ☑ No

10. Has the work, use or occupancy to which this appeal relates already begun? ☐ Yes ☑ No

11. Identify the type of appeal you are requesting *(check all that apply)*:

☐ INTERPRETATION (p. 2) ☐ VARIANCE EXTENSION (p. 2) ☐ USE VARIANCE (pp. 3-6) ☑ AREA VARIANCE (pp. 6-7)

FEES: Make checks payable to the "Commissioner of Finance". Fees are cumulative and required for each request below.

| | |
|---|---|
| ☐ Interpretation | $ 400 |
| ☐ Use variance | $1,000 |
| ☑ Area variance | |
| -Residential use/property: | $ 150 |
| -Non-residential use/property: | $ 500 |
| ☐ Extensions: | $ 150 |

---

INTERPRETATION – PLEASE ANSWER THE FOLLOWING (add additional information as necessary):

1. Identify the section(s) of the Zoning Ordinance for which you are seeking an interpretation:

Section(s) _____

2. How do you request that this section be interpreted? _____

_____

_____

_____

3. If interpretation is denied, do you wish to request alternative zoning relief? ☐ Yes ☐ No

4. If the answer to #3 is "yes," what alternative relief do you request? ☐ Use Variance ☐ Area Variance

EXTENSION OF A VARIANCE – PLEASE ANSWER THE FOLLOWING (add additional information as necessary):

1. Date original variance was granted: _____ 2. Type of variance granted? ☐ Use ☐ Area

3. Date original variance expired: _____

5. Explain why the extension is necessary. Why wasn't the original timeframe sufficient?

_____

_____

_____

_____

When requesting an extension of time for an existing variance, the applicant must prove that the circumstances upon which the original variance was granted have not changed. Specifically demonstrate that there have been no significant changes on the site, in the neighborhood, or within the circumstances upon which the original variance was granted:

_____

_____

_____

_____

_____

_____

USE VARIANCE – PLEASE ANSWER THE FOLLOWING (add additional information as necessary):

A use variance is requested to permit the following: _____

_____

_____

For the Zoning Board to grant a request for a use variance, an applicant must prove that the zoning regulations create an unnecessary hardship in relation to that property. In seeking a use variance, New York State law requires an applicant to prove all four of the following "tests".

1. That the applicant cannot realize a reasonable financial return on initial investment for any currently permitted use on the property. "Dollars & cents" proof must be submitted as evidence. The property in question cannot yield a reasonable return for the following reasons:

   _____

   _____

   _____

   _____

   _____

   _____

A. Submit the following financial evidence relating to this property (attach additional evidence as needed):

1) Date of purchase: _____ Purchase amount: $_____

2) Indicate dates and costs of any improvements made to property after purchase:

| Date | Improvement | Cost |
|---|---|---|
| | | |
| | | |
| | | |

3) Annual maintenance expenses: $_____ 4) Annual taxes: $_____

5) Annual income generated from property: $_____

6) City assessed value: $_____ Equalization rate:_____ Estimated Market Value: $_____

7) Appraised Value: $_____ Appraiser: _____Date: _____

Appraisal Assumptions:_____

B. Has property been listed for sale with the Multiple Listing Service (MLS)? ☐ Yes ☐ No If "yes", for how long? _____

1) Original listing date(s):_____ Original listing price: $_____

If listing price was reduced, describe when and to what extent: _____

_____

2) Has the property been advertised in the newspapers or other publications? ☐ Yes ☐ No

If yes, describe frequency and name of publications: _____

_____

3) Has the property had a "For Sale" sign posted on it? ☐ Yes ☐ No

If yes, list dates when sign was posted: _____

_____

4) How many times has the property been shown and with what results? _____

_____

_____

2. That the financial hardship relating to this property is unique and does not apply to a substantial portion of the neighborhood. Difficulties shared with numerous other properties in the same neighborhood or district would not satisfy this requirement. This previously identified financial hardship is unique for the following reasons:

_____

_____

_____

_____

_____

_____

_____

_____

_____

_____

3. That the variance, if granted, will not alter the essential character of the neighborhood. Changes that will alter the character of a neighborhood or district would be at odds with the purpose of the Zoning Ordinance. The requested variance will not alter the character of the neighborhood for the following reasons:

4. That the alleged hardship has not been self-created. An applicant (whether the property owner or one acting on behalf of the property owner) cannot claim "unnecessary hardship" if that hardship was created by the applicant, or if the applicant acquired the property knowing (or was in a position to know) the conditions for which the applicant is seeking relief. The hardship has not been self-created for the following reasons:

**AREA VARIANCE** – **PLEASE ANSWER THE FOLLOWING** (add additional information as necessary):

The applicant requests relief from the following Zoning Ordinance article(s) 2.3

| Dimensional Requirements | From | To |
|---|---|---|
| Lot 1: Minimum Lot Size | 6,600 sq. ft. | 5,319 sq. ft. |
| Lot 1: Minimum Average Width | 60 ft. | 48 ft. |
| Lot 2: Minimum Lot Size | 6,600 sq. ft. | 5,279 sq. ft. |
| Lot 2: Minimum Average Width | 60 ft. | 48 ft. |
| | | |
| | | |

Other:

To grant an area variance, the ZBA must balance the benefits to the applicant and the health, safety, and welfare of the neighborhood and community, taking into consideration the following:

1. Whether the benefit sought by the applicant can be achieved by other feasible means. Identify what alternatives to the variance have been explored (alternative designs, attempts to purchase land, etc.) and why they are not feasible.

   Please see attached Project Narrative.

2. Whether granting the variance will produce an undesirable change in the character of the neighborhood or a detriment to nearby properties. Granting the variance will not create a detriment to nearby properties or an undesirable change in the neighborhood character for the following reasons:

   Please see attached Project Narrative.

3. Whether the variance is substantial. The requested variance is not substantial for the following reasons:

Please see attached Project Narrative.

4. Whether the variance will have adverse physical or environmental effects on neighborhood or district. The requested variance will not have an adverse physical or environmental effect on the neighborhood or district for the following reasons:

Please see attached Project Narrative.

5. Whether the alleged difficulty was self-created (although this does not necessarily preclude the granting of an area variance). Explain whether the alleged difficulty was or was not self-created:

Please see attached Project Narrative.

## DISCLOSURE

Does any City officer, employee, or family member thereof have a financial interest (as defined by General Municipal Law Section 809) in this application? ☑ No ☐ Yes If "yes", a statement disclosing the name, residence and nature and extent of this interest must be filed with this application.

## APPLICANT CERTIFICATION

I/we, the property owner(s), or purchaser(s)/lessee(s) under contract, of the land in question, hereby request an appearance before the Zoning Board of Appeals.

By the signature(s) attached hereto, I/we certify that the information provided within this application and accompanying documentation is, to the best of my/our knowledge, true and accurate. I/we further understand that intentionally providing false or misleading information is grounds for immediate denial of this application.

Furthermore, I/we hereby authorize the members of the Zoning Board of Appeals and designated City staff to enter the property associated with this application for purposes of conducting any necessary site inspections relating to this appeal.

Kimberly R Santos _____ Date: 9/26/2016
(applicant signature)

_____ Date: 9/26/2016
(applicant signature)

If applicant is not the currently the owner of the property, the current owner must also sign.

Owner Signature: _____ Date: _____

Owner Signature: _____ Date: _____

# *Short Environmental Assessment Form*
## *Part 1 - Project Information*

## Instructions for Completing

**Part 1 - Project Information. The applicant or project sponsor is responsible for the completion of Part 1.** Responses become part of the application for approval or funding, are subject to public review, and may be subject to further verification. Complete Part 1 based on information currently available. If additional research or investigation would be needed to fully respond to any item, please answer as thoroughly as possible based on current information.

Complete all items in Part 1. You may also provide any additional information which you believe will be needed by or useful to the lead agency; attach additional pages as necessary to supplement any item.

**Part 1 - Project and Sponsor Information**

Name of Action or Project:
Kimberly and Michael Southern - Single Lot Subdivision

Project Location (describe, and attach a location map):
124 York Avenue, Saratoga Springs, NY

Brief Description of Proposed Action:
Single lot subdivision which requires subdivision approval and two area variances of the minimum lot size and two 12 ft. area variances of the average lot width.

| Name of Applicant or Sponsor: | Telephone: [redacted] |
|---|---|
| Kimberly and Michael Southern | E-Mail: [redacted] |

Address:
[redacted]

| City/PO: | State: | Zip Code: |
|---|---|---|
| [redacted] | [redacted] | [redacted] |

| | NO | YES |
|---|---|---|
| 1. Does the proposed action only involve the legislative adoption of a plan, local law, ordinance, administrative rule, or regulation? If Yes, attach a narrative description of the intent of the proposed action and the environmental resources that may be affected in the municipality and proceed to Part 2. If no, continue to question 2. | ☑ | ☐ |
| 2. Does the proposed action require a permit, approval or funding from any other governmental Agency? If Yes, list agency(s) name and permit or approval: Saratoga Springs Planning Board Subdivision Approval | ☐ | ☑ |

3.a. Total acreage of the site of the proposed action? 0.243 acres
b. Total acreage to be physically disturbed? 0.121 acres
c. Total acreage (project site and any contiguous properties) owned or controlled by the applicant or project sponsor? 0.243 acres

4. Check all land uses that occur on, adjoining and near the proposed action.

☐ Urban ☐ Rural (non-agriculture) ☐ Industrial ☐ Commercial ☑ Residential (suburban)
☐ Forest ☐ Agriculture ☐ Aquatic ☐ Other (specify): _____
☐ Parkland

| | NO | YES | N/A |
|---|---|---|---|
| 5. Is the proposed action, | | | |
| a. A permitted use under the zoning regulations? | ☐ | ☑ | ☐ |
| b. Consistent with the adopted comprehensive plan? | ☐ | ☑ | ☐ |

| | NO | YES |
|---|---|---|
| 6. Is the proposed action consistent with the predominant character of the existing built or natural landscape? | ☐ | ☑ |
| 7. Is the site of the proposed action located in, or does it adjoin, a state listed Critical Environmental Area? If Yes, identify: _____ | ☑ | ☐ |
| 8. a. Will the proposed action result in a substantial increase in traffic above present levels? | ☑ | ☐ |
| b. Are public transportation service(s) available at or near the site of the proposed action? | ☐ | ☑ |
| c. Are any pedestrian accommodations or bicycle routes available on or near site of the proposed action? | ☐ | ☑ |
| 9. Does the proposed action meet or exceed the state energy code requirements? If the proposed action will exceed requirements, describe design features and technologies: _____ | ☐ | ☑ |
| 10. Will the proposed action connect to an existing public/private water supply? If No, describe method for providing potable water: _____ | ☐ | ☑ |
| 11. Will the proposed action connect to existing wastewater utilities? If No, describe method for providing wastewater treatment: _____ | ☐ | ☑ |
| 12. a. Does the site contain a structure that is listed on either the State or National Register of Historic Places? | ☑ | ☐ |
| b. Is the proposed action located in an archeological sensitive area? | ☑ | ☐ |
| 13. a. Does any portion of the site of the proposed action, or lands adjoining the proposed action, contain wetlands or other waterbodies regulated by a federal, state or local agency? | ☑ | ☐ |
| b. Would the proposed action physically alter, or encroach into, any existing wetland or waterbody? If Yes, identify the wetland or waterbody and extent of alterations in square feet or acres: _____ | ☑ | ☐ |

14. Identify the typical habitat types that occur on, or are likely to be found on the project site. Check all that apply:

☐ Shoreline ☐ Forest ☐ Agricultural/grasslands ☐ Early mid-successional

☐ Wetland ☐ Urban ☑ Suburban

| | NO | YES |
|---|---|---|
| 15. Does the site of the proposed action contain any species of animal, or associated habitats, listed by the State or Federal government as threatened or endangered? | ☑ | ☐ |
| 16. Is the project site located in the 100 year flood plain? | ☑ | ☐ |
| 17. Will the proposed action create storm water discharge, either from point or non-point sources? If Yes, a. Will storm water discharges flow to adjacent properties? ☑ NO ☐ YES | ☐ | ☑ |
| b. Will storm water discharges be directed to established conveyance systems (runoff and storm drains)? If Yes, briefly describe: ☐ NO ☑ YES City of Saratoga Springs runoff storm drains and existing catch basins. | | |

| | NO | YES |
|---|---|---|
| 18. Does the proposed action include construction or other activities that result in the impoundment of water or other liquids (e.g. retention pond, waste lagoon, dam)?<br>If Yes, explain purpose and size: | ✓ | |
| 19. Has the site of the proposed action or an adjoining property been the location of an active or closed solid waste management facility?<br>If Yes, describe: | ✓ | |
| 20. Has the site of the proposed action or an adjoining property been the subject of remediation (ongoing or completed) for hazardous waste?<br>If Yes, describe: | ✓ | |

**I AFFIRM THAT THE INFORMATION PROVIDED ABOVE IS TRUE AND ACCURATE TO THE BEST OF MY KNOWLEDGE**

Applicant/sponsor name: Kimberly R Southern Date: 9/26/16

Signature: Kimberly R Southern

PRINT FORM

**124 YORK AVENUE**
**MICHAEL AND KIMBERLY SOUTHERN**
**AREA VARIANCE APPLICATION**

***PROJECT NARRATIVE***

The applicants are seeking two area variances to permit a single lot subdivision in connection with a parcel of property known as 124 York Avenue ("Property") which is located in the UR-3 of the Saratoga Springs Zoning Code ("Code") (commonly known as Parcel ID 166.46-3-5) . The relief the applicants seeks is as follows:

1. Lot 1: 1,281 square feet from the minimum lot size of 6,600 square feet (19%) and 12 feet from the minimum average lot width of 60 feet (20%).

2. Lot 2: 1,321 square feet from the minimum lot size of 6,600 square feet (20%) and 12 feet from the minimum average lot width of 60 feet (20%).

**124 YORK AVENUE**
**MICHAEL AND KIMBERLY SOUTHERN**
**AREA VARIANCE APPLICATION**

The applicants intend to place a small, single family home on the newly created lot in order for them to return to the area to care for aging parents. The existing home would be kept in the family for the applicants' children.

A. Parcel History

The furthest research in the chain of title for the Parcel is evidenced by an 1880 deed when two lots were created on one deed from the vast land holdings of the Estate of W.L.F. Warren who died in 1860. A home was erected on the extreme northeastern edge of the lands closest to York Avenue in 1875 according to the City Assessor's records. The land description in the deeds includes reference to two lots, namely "the west half of Lot No. 53 and a portion of the east half of lot No. 52." (A copy of the 1947 deed is attached as Exhibit A). However, the lots were never on separate deeds and have been sold pursuant to a single deed description since that time. As is clear from a review of the history of the neighborhood and is demonstrated by the average lot configuration (discussed below), the two lots described in the chain of title were estimated at 50ft x 110 ft. each. At some point between 1937 and 1947, two feet from the easterly side of the lots were sold to a neighbor which resulted in the current configuration of 48ft x 110ft. Taken together, the Property's lands total 48 ft. x 220 ft.

In 1947, the lots were purchased by Francis and Jean Southern, a married couple who moved from Woodlawn Avenue with their children following World War II. At that time, the City lacked zoning and, as such, there was no reason for Francis Southern to concern himself with the 48 ft. of lot width (now non-conforming) or the fact that his two lots appeared on a single deed would someday restrict his ability to subdivide as of right. Unaware of implications of keeping the two lots on a single deed, Francis Southern moved his family (including the

applicant's father) into the home on York Avenue and worked every day as a Captain for the Saratoga Springs Fire Department on Lake Avenue – a job within walking distance of the house. Unfortunately for his family, Francis Southern was killed while on the job in 1975 and left his wife, Jean, behind to manage the affairs of the family alone. Incidentally, "Southern Place" off of Maple Avenue was named for Captain Southern to honor his memory and service.

In the years that followed, Jean resided in the home and likely remained unaware of the City's moves to impose zoning in the 1960's which would commence a decades-long process of ultimately limiting the family's ability to "sell off" the second lot recited in the deed which fronts on to Middle Avenue. Jean died in January of 2014 and the applicants, Michael Southern and his wife Kimberly, took title to the lands of his grandmother pursuant to an Executor's Deed dated August 28, 2014.

Since taking ownership, the Southerns rehabilitated the entire inside of the existing home while keeping the 1880s façade and historic character intact. They have rented the property to tenants as they reside in Massachusetts at the present time. Their current plans are to retire to Saratoga Springs if they are permitted to build a small, bungalow style retirement home on the second lot fronting onto Middle Avenue which would also house Michael's aging parents on the first floor. The new home and the existing home from 1875 would remain in the family for eventual ownership by the Southerns' children. The Southerns have no intention of parting with the lots which have been in the family for over 65 years.

B. Area Variance Standards and Applicants' Support for Relief

As mentioned, the Property is situated in the Urban Residential-3 zoning district and is subject to minimum lot size requirements of 6,600 square feet for 1-unit and 8,000 square feet

for 2-units. The proposed subdivision would create two lots of 5,298 square feet (48ft x 110ft) with a 48-foot average lot width. The applicants seek relief from City Zoning Ordinance Section 2.3's minimum lot size requirements through two small 20% variances. As set forth in Section 8.3.1 of the City's Zoning Ordinance the test for an area variance is as follows:

1. **Whether the benefit sought by the applicant can be achieved by other feasible means**

Any additional land for the applicants' proposed lots to be conforming would necessarily have to come from their neighbors. However, the land to the southwest (Mark Dillon 166.46-3-3.1) is 52ft x 96ft (or 4,992 square feet) is already undersized and therefore any sale would only create further non-conformance of his lot. The land to the southeast (Anne Boyer 166.46-3-38) is 70ft x 100ft (or 7,000 feet), which means that there is only 400 feet available before there would be a resulting non-conformance. The land to the northeast (Robert and Eileen Christopher 166.46-3-4) is already significantly undersized at 5754 square feet with a two family residence (Code requires 8000 square feet) for which any sale would only compound the existing non-conformance. The land to the northwest (Geraldine Dorey 166.46-3-6) has a square footage of 7837 which leaves only 1,237 square feet available before the lot becomes non-conforming.

As noted above, the combined lots of the applicants require additional lands totaling 2,603 square feet for compliance and there is no neighbor (or combination of neighbors) with enough available lands for sale. The total available land solely based upon minimum lot size is 1637 before neighboring lots become non-conforming which is simply not sufficient for the proposal. Furthermore, the additional implications to existing improvements, setback

limitations, and overall lot coverage would also have serious implications for any sale of neighboring land to the applicants.

As such, there is no other feasible alternative that will deliver the same benefits to the applicant.

**2. Whether the variance is substantial**

The relief the applicants seeks is as follows:

1. Lot 1: 1,281 square feet from the minimum lot size of 6,600 square feet (19%) and 12 feet from the minimum average lot width of 60 feet (20%).

2. Lot 2: 1,321 square feet from the minimum lot size of 6,600 square feet (20%) and 12 feet from the minimum average lot width of 60 feet (20%).

While there is no litmus test for a zoning board of appeals as to *de facto* substantiality, the applicants submit that, given the metrics of the surrounding neighborhood which is overwhelming out of conformance in amounts far in excess of 20%, the relief sought in this application is not substantial in nature.

**3. Whether granting the variance will produce an undesirable change in the character of the neighborhood or a detriment to nearby properties.**

In assessing the merits of a request for relief, the applicants undertook an exhaustive analysis of the properties within approximately 700 feet of the Property in order to empirically

determine the "character of the neighborhood[1]." In all, the applicants reviewed records for 121 properties within study area and the results are as follows:

a. Only 9 properties of 121 are conforming in both average lot width and minimum lot size or 7.44%. This results in a non-conformance rate of 92.56%.
b. Only 9 properties of the 121 are conforming in minimum lot size (or 7.44%) which results in a non-conformance rate of 92.56%.
c. 29 properties of the 121 examined are conforming in average lot width, thereby resulting in a non-conformance rate of approximately 76%.
d. Lots with less than 5300 square feet in size totaled 52 (or 43%).

The character of the neighborhood is reflective of the subdivision design over the course of many, many years resulting in the most common lot configuration of 50 ft. of lot width. In fact, 66% of the homes have a frontage between 40 feet and 52 feet[2]. As such, the relief the applicants seek is in no way out of character with the surrounding neighborhood and, as noted by the deed history, intentional in the description of two lot which would have been 50 ft. x 110 ft. in the original configuration.

As the applicants propose to keep the existing single-family home and erect one small bungalow on the new lot, there is nothing proposed which is outside the scope and impact of the

---

[1] The applicants have compiled data on 121 homes in and around the York Avenue property as demonstrative of the neighborhood in general. The area along Lake Avenue was not examined as that road is the primary east-west corridor through the City and reflective of a different character. The properties examined in the applicants' analysis were largely taken from York Avenue, Middle Avenue, Avery Street, James Street, North Street, and Warren Street. The Average Lot Width, Lot Size, Frontage and Use were all examined as part of the data collection process. The information was taken directly from municipal records on www.saratogasprings.oarsystem.com or www.maphost.com/saratoga.

[2] This number increases significantly is the corner lots are removed, as they receive the benefit of lot width/frontage calculations which are different from interior lots.

92% of non-conforming surrounding homes. The neighbors on two sides have significantly non-conforming lots which are consistent with the historic density of this neighborhood; dating back to the 1800s. In fact, the applicants posit that a home on the newly created lot will create uniformity in the neighborhood layout which presently has the absence of a home along Middle Avenue which looks "off" due to the appearance of an empty lot.

4. **Whether the variance will have adverse physical or environmental effects on neighborhood or district**

Due to the *de minimus* nature of the relief requested, there will be no adverse physical or environmental effects on the neighborhood.

5. **Whether the alleged difficulty was self-created**

As noted extensively above, the applicants cannot make the argument that their lots were on two separate deeds prior to the institution of zoning in the 1960s. As such, the argument of a pre-existing non-conforming lot is unavailable to them. However, the applicants submit compelling historical data which demonstrates the recitation of two lots on a single deed in the chain of title which is traced to the applicants' grandfather and grandmother. Since 1947, the Property has not been outside the Southern family and was most recently conveyed as a result of Jean Southern's death. While the applicants must acknowledge self-created hardship in the strictest reading of the law, they ask that the Board consider all the information as grounds to determine that such self-creation is not fatal to an application for these area variances.

**124 YORK AVENUE**
**MICHAEL AND KIMBERLY SOUTHERN**
**AREA VARIANCE APPLICATION**

C. Recent Precedents

In 2015, the Board granted similar relief to an owner in similar circumstances at 10 Avery Street (#2385) in area variances for two substandard lots within this same neighborhood. Nearly identical relief is requested by the applicants for lot width as was granted for Avery Street at 17% (60ft to 50ft). However, the applicants acknowledge that the minimum lot size relief is more than was granted in the Avery Street variances, but do note for the Board that the reasoning for the relief is largely the same, i.e. unintended merger of lots on a single deed, neighborhood which is nearly 100% out of conformance with the zoning requirements, proposed lot sizes which are in conformance with nearly half of the residences, available municipal water and sewer, access onto Middle Avenue, and the inability to purchase land from adjoining neighbors. For all these reasons, we ask the Board to consider the precedential effect of the Avery Street variances for minimum lot size and average lot width.

D. Photographs

124 York Avenue (Southwest exposure):

**124 YORK AVENUE**
**MICHAEL AND KIMBERLY SOUTHERN**
**AREA VARIANCE APPLICATION**

129 Middle Avenue: Southwest adjoining neighbor

147 Middle Avenue: Southeast adjoining neighbor

**124 YORK AVENUE**
**MICHAEL AND KIMBERLY SOUTHERN**
**AREA VARIANCE APPLICATION**

Middle Avenue View with proposed Lot 2:

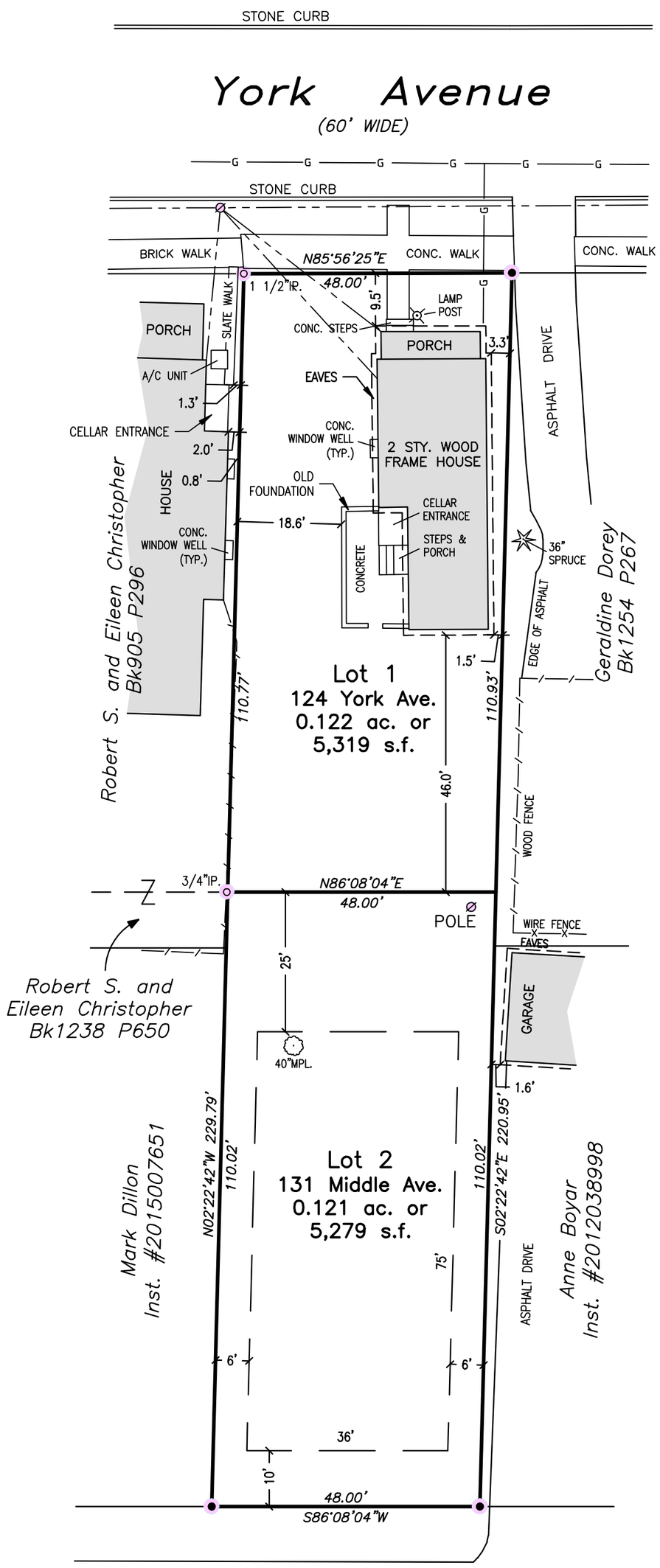

## Map Legend

- • 5/8" steel rod set with a tag
- ○ marker found, labeled
- Ø utility pole
- overhead wires
- wood fence

## Map References:

1. "Map of Lands on New York and Lake Avenues belonging to William L.F. Warren" dated July 1, 1860 filed in the Saratoga County Clerk's Office in Map File Number W–58.
2. "Map of Lots Belonging To The Estate of Lucy C. Lester" filed April 1, 1922 prepared by Samuel Mott, CE filed in the Saratoga County Clerk's Office in Map File Number Card 1; Pocket 6; Folder 3.
3. "Survey of Lands of Wilbur L. and Rose Pratt" dated May 2, 1985 prepared by W. Bruce Hawks, L.S.
4. "Lands of Christopher, prepared for Robert S. and Eileen Christopher" dated December 7, 1978 prepared by Peter Kent Engineers.

## Deed Reference:

Kimberly R. Southern and Michael P. Southern dated August 28, 2014 filed in the Saratoga County Clerk's Office in Instrument Number 2014027776.

## Total Area= 0.243 ac. or 10,597 s.f.

## UR–3 AREA REQUIREMENTS

| Zoning District | Minimum Lot size Square Feet | Mean Average Width (feet) | Maximum Percent of Lot to be Occupied | | Minimum Yard Dimensions | | | | Principal Buildings | | Accessory Building Minimum Distance to | | | | |
|---|---|---|---|---|---|---|---|---|---|---|---|---|---|---|---|
| | | | Principal Building | Accessory Building | Front (feet) | Rear (feet) | Each Side (feet) | Total Side (feet) | Minimum First Floor Area (square feet) | Maximum Height (feet) | Principal Building (feet) | Front Lot Line (feet) | Side Lot Line (feet) | Rear Lot Line (feet) | Minimum Percent of Lot to be Permeable |
| UR–3 | 6,600 1–unit / 8,000 2–unit | 60 1–unit / 80 2–unit | 30 | 10 | 10 | 25 | 4 | 12 | 1 Story=1,200 2 Story=800 | 60 | 5 | 10 | 5 | 5 | 25 |

Unauthorized alteration or addition to a survey map bearing a licensed Land Surveyor's Seal is a violation of Section 7209 subdivision 2 of the New York State Education Law.

Only apparent easements (if any) are shown on this survey. No abstract of title was available.

| DATE | REVISION |
|---|---|
| | |
| | |
| | |

10 0 10 20
Scale: 1" = 20'

# Proposed Subdivision
# Kimberly R. and Michael P. Southern

*Situate at*

*124 York Avenue*

*City of Saratoga Springs, Saratoga County NY*

[redacted]
12 Lake Avenue
Saratoga Springs,
NY, 12866

THOMPSON FLEMING
LAND SURVEYORS, P.C.

DATE: Sept. 22, 2016
TAX MAP: 166.46–3–5
JOB NUMBER: S14–191.17

P:\Southern, 124 York Ave S14–191\dwg\S14–191 Southern Subdivision Map.dwg

## Variance for property 124 York Ave - #2925 SOUTHERN SUBDIVISION

**From :** mark dillon [redacted] Fri, Nov 04, 2016 02:41 PM

**Subject :** Variance for property 124 York Ave - #2925 SOUTHERN SUBDIVISION

**To :** lindsey gonzalez <lindsey.gonzalez@saratoga-springs.org>

**Cc :** 'mark dillon' <mdillon@natek.com>, 'debbie dillon' <ddillon@natek.com>

Dear Zoning Board of Appeals:

My name is Mark Dillon and am the property owner of [redacted] Middle Avenue. I am writing in response to a Public Hearing Notification letter from Kimberly & Michael Southern who have applied for a variance on their property at 124 York Avenue. I understand that the public hearing on this application will be on Nov. 7th. I am submitting this written response in case I am unable to attend as I will be out of the area. It is my intention to attend if I am back in time for the meeting but would like the board know of my concerns if I am not.

My wife and I purchased the property at [redacted] Middle Avenue two years ago for many reasons: one being the location to the City and also due to the parcel next to us which is part of 124 York, was too small to build on or be subdivided. This is a property that has been this way since 1875.

We are not opposed to variances in general as they may necessary as to the special conditions to a particular piece of property that would create an undue hardship. I would hope that if I ever needed one I would be afforded the opportunity to seek one that was absolutely necessary.

The applicants have previously remodeled the existing house and now are seeking to add another structure/home to the premises. The proposed variance seeks to decrease the setbacks by 12ft on each lot and reduce the lot sizes by approximately 1,200 square feet. Such proposed lot sizes would be approximately 18% less than currently required. I certainly would have no issue if they were seeking a minimal variance due to the nature of the property. However, in this case the applicants are asking to split the parcels, add a new home and ask for a large variance both in setbacks and lot sizes, which is self-created.

We would be against the proposed two lot subdivision with the current plans for a new home to be constructed with the setbacks as proposed absent a showing of undue hardship.

Granting the variance as proposed would set a precedent that would allow for future property owners to squeeze in more than what is allowed and seeming only benefit said property owner.

Thank you for allowing me an opportunity to comment on the proposal.

*Regards,*
*Mark and Debbie Dillon*
*Property owner at* [redacted] *middle ave.*
[redacted]