CITY OF SARATOGA SPRINGS

ZONING BOARD OF APPEALS

CITY HALL - 474 BROADWAY
SARATOGA SPRINGS, NEW YORK 12866
PH) 518-587-3550 FX) 518-580-9480
WWW.SARATOGA-SPRINGS.ORG

Bill Moore, *Chair*
Keith B. Kaplan, *Vice Chair*
Adam McNeill, *Secretary*
Gary Hasbrouck
George "Skip" Carlson
James Helicke
Susan Steer
Cheryl Grey, alternate
Oksana Ludd, alternate

July 26, 2016

Steve Rowland, Chair
Design Review Commission
City Hall - 474 Broadway
Saratoga Springs, NY 12866

Re: Advisory opinion request for Rite Aid sign package

Dear Steve,

On July 18, 2016 the Zoning Board of Appeals (ZBA) passed a motion to seek an advisory opinion from the Design Review Commission (DRC) for the following application:

> #2786.2 RITE AID SIGNAGE, 90 West Ave./242 Washington St., area variance for proposed sign package for a new pharmacy/retail establishment; seeking relief from the maximum number of wall signs, maximum area for wall signs, placement of wall signs above the first floor level of the building, maximum area for a freestanding sign, to permit directional signage, maximum area for directional signage, and to permit temporary signage (banner) in the Transect-5 District.

Architectural Review would also be required for this project. Thank you for your consideration of this request and we look forward to your input.

Respectfully yours,

Bill Moore, Chair
Zoning Board of Appeals

Application Narrative
Rite Aid Redevelopment
Application for Signage Area Variances

National Retail Properties, Inc. (f/k/a Commercial Net Lease Realty, Inc.) (the "Applicant") submits this Application for Area Variances executed by David J. Reif, Senior Vice President, Leasing & Construction, dated June 8, 2016. The Applicant is the title holder of 90 West Avenue and the purchaser under contract of the parcel located at 242 Washington Street, commonly known as KNC Touchfree Car Wash.

The Applicant previously filed a First Amendment to Application for Area Variances as more particularly set forth in its application of December 10, 2014, for which variances were granted by this Board on January 26, 2015.

This Application seeks relief from the Zoning Ordinance for the Applicant's proposed signage package, submitted together with this Application. The signage for the site is in Rite Aid's "New England" style, meaning its letters and returns are generally in the same style and color as the other Rite Aid stores throughout the east coast which share the New England design. Gooseneck lighting will illuminate each proposed sign – no back lighting or internal illumination is proposed, and no sign protrudes from the wall more than three inches.

The site is somewhat unique in the City because it is located at the corner of West Avenue and Washington Street, both very high capacity streets. The approval process for the expansion of the Rite Aid Pharmacy has been extensive. The approval processMost recently with the building's footprint and exterior was approved by the Planning Board's site plan approval and by architectural approval from the Design Review Commission. A key element of the DRC's approval was the presence of an entrance at the intersection of West Avenue and Washington Street. That intersection is a gateway to the City and the entrance in that location will promote pedestrian activity, a goal of the Transect-5 district.

The signage package is designed to allow for Rite Aid brand recognition along West Avenue, Washington Street and at the entrance opposite the intersection. In addition, the proposed signage provides for the (i) designation of the pharmacy, (ii) the location of the drive-thru, (iii) the co-brand "GNC" signage accompanying the Rite Aid brand and (iv) temporary signage for operation of the pharmacy during construction of the new building.

Area Variance

1. **The benefit sought by the Applicant cannot be achieved by other feasible means**. The within application represents the third iteration of the signage package prepared by the project team in an effort to minimize the relief sought in this application while incorporating Rite Aid's standard New England design style used for stores on the east

coast. In recognition of the provisions of Article 6 of the Zoning Code, the New England style signage package has been reduced.

The location of the store at the intersection of two major thoroughfares within the city drives, in part, the need for the signage proposed. The addition of the entrance opposite the intersection (incorporated into the design during discussions with DRC) places additional demands for identification of the facility. Thirdly, the orientation of the building to accommodate anticipated pedestrian traffic requires a modification of the standard Rite Aid package from the signage originally contemplated for the overwhelming majority of the store's traffic by vehicle.

Location of the signage protruding slightly above the first floor is necessitated by building elements approved by DRC. In this instance, DRC balanced the need for architectural features at this gateway against the desire to have wall signage entirely below the second floor. No other locations on the building are feasible for compliance in light of the approved architecture.

The drive-thru and directional signage on the south side are intended to direct customers to the approved circulation pattern within the site.

2. **The granting of the relief will not create a detriment to nearby properties nor an undesirable change in neighborhood character for the following reasons**. There is a business at each of the four corners of the West Avenue and Washington Street intersection. This application is necessitated by the redevelopment of the site with a new, modern Rite Aid pharmacy. The facility will be a marked improvement over the existing building. The proposed signage will not be a detriment to nearby properties, but instead will be an improvement to neighborhood character. The proposed signage is meant to match the new building, which will be a more appropriate structure for its location at the gateway to the City. Across the streets are a Stewart's Shop and Mobile Station, both with fuel pumps facing the street, and D'Andrea's Liquor Store. Moreover, the car wash immediately adjacent to the current Rite Aid will be demolished, minimizing the number of neighboring buildings.

   As the signage package demonstrates, except for the freestanding sign which utilizes LED illumination, no signs are internally illuminated. To minimize any impact of the signage to neighboring properties, all wall signs are illuminated with gooseneck lighting. Furthermore, each sign's return measures between 3 and 5 inches, below the 6 inch limit set by the Ordinance.

3. **The requested variances are not substantial.** While the number of variances sought is greater than many applications reviewed by the ZBA, the impact of the proposed variances is not substantial. Under the Ordinance, each street-facing façade is permitted one wall sign of 100 square feet. This application contains three such street-facing facades: The Westerly façade, facing West Avenue, has approximately 107.8 square feet of signage, the northerly façade, facing Washington Street, has only 49.4 square feet of

signage and the intersection façade has one sign of a mere 10.3 square feet. Although the West and Washington facades have more than one sign each, the signs are generally clustered together, and appear as a cohesive unit. Furthermore, although a few of the signs on these facades are higher than the 18 inches permitted by the Ordinance, they are proportionate to the size of the building. The building is a large, two-story structure and 18 inch lettering would look out of place.

The southerly façade, facing the parking lot, contains wall signs that are not permitted by the Ordinance because it is not a street-facing façade. However, these signs are in the interior of site and therefore will not detract from the intent of the Ordinance to protect public health, welfare and safety, and will not obstruct traffic or cause visual blight. In addition to the reasons for the southerly façade's signs stated in answer number one above, the remaining signs in this area are either directional, and therefore exempt from the Ordinance, or signal to motorists the location of the drive-thru, and are therefore necessary.

4. **The requested variance will have no adverse physical or environmental effects on the neighborhood or district**. As mentioned above, the project includes demolishing the existing car wash in favor of a single Rite Aid building, resulting in signage in the project area for a single business instead of two businesses, presenting a more cohesive look for the neighborhood. The proposed free-standing sign is located at the opposite end of the property from the intersection and will not adversely affect driver or pedestrian safety.

5. **The difficulty is self-created, but this is not fatal to the application**. The Applicant desires to redevelop the existing Rite Aid, which is out of date. The proposed large, modern Rite Aid is the result of business decisions dictated by the evolving pharmacy market, and it requires appropriate signage to match.

CITY OF SARATOGA SPRINGS

City Hall - 474 Broadway
Saratoga Springs, New York 12866
Tel: 518-587-3550 fax: 518-580-9480

[FOR OFFICE USE]

_____ (Application #)

_____ (Date received)

APPLICATION FOR:
APPEAL TO THE ZONING BOARD FOR AN INTERPRETATION, USE VARIANCE, AREA VARIANCE AND/OR VARIANCE EXTENSION

	APPLICANT(S)*	OWNER(S) *(If not applicant)*	ATTORNEY/AGENT
Name	National Retail Properties, Inc.		Matthew J. Jones
Address	450 S. Orange Avenue, Suite 900 Orlando, FL 32801		[redacted]
Phone	[redacted] /	/	
Email			

* An applicant must be the property owner, lessee, or one with an option to lease or purchase the property in question.

Applicant's Interest in the premises: ☑ Owner ☐ Lessee ☑ Under option to lease or purchase

PROPERTY INFORMATION

1. Property Address/Location: 90 West Ave/ 242 Washington St Tax Parcel No.: 165.14-2-2.2 165.1 .4-2-1 - _____ - _____ *(for example: 165.52 – 4 – 37)*
2. Date acquired by current owner: 9/20/2004 3. Zoning District when purchased: C-2
4. Present use of property: Rite Aid Pharmacy 5. Current Zoning District: T-5
6. Has a previous ZBA application/appeal been filed for this property?
   ☑ Yes (when? 1992, 2014 For what? ~~use approval/ area~~ variances)
   ☑ No
7. Is property located within (check all that apply)?: ☐ Historic District ☑ Architectural Review District ☑ 500' of a State Park, city boundary, or county/state highway?
8. Brief description of proposed action:
   Sign Variances
9. Is there a written violation for this parcel that is not the subject of this application? ☐ Yes ☑ No
10. Has the work, use or occupancy to which this appeal relates already begun? ☐ Yes ☑ No
11. Identify the type of appeal you are requesting *(check all that apply)*:

☐ INTERPRETATION (p. 2) ☐ VARIANCE EXTENSION (p. 2) ☐ USE VARIANCE (pp. 3-6) ☑ AREA VARIANCE (pp. 6-7)

FEES: Make checks payable to the "Commissioner of Finance". Fees are cumulative and required for each request below.

☐ Interpretation	$ 400
☐ Use variance	$1,000
☑ Area variance	
-Residential use/property:	$ 150
-Non-residential use/property:	$ 500
☐ Extensions:	$ 150

INTERPRETATION – PLEASE ANSWER THE FOLLOWING (add additional information as necessary):

1. Identify the section(s) of the Zoning Ordinance for which you are seeking an interpretation:

Section(s) _____

2. How do you request that this section be interpreted? _____

_____

_____

_____

3. If interpretation is denied, do you wish to request alternative zoning relief? ☐Yes ☐No

4. If the answer to #3 is "yes," what alternative relief do you request? ☐ Use Variance ☐ Area Variance

EXTENSION OF A VARIANCE – PLEASE ANSWER THE FOLLOWING (add additional information as necessary):

1. Date original variance was granted: _____ 2. Type of variance granted? ☐ Use ☐ Area

3. Date original variance expired: _____

5. Explain why the extension is necessary. Why wasn't the original timeframe sufficient?

_____

_____

_____

_____

When requesting an extension of time for an existing variance, the applicant must prove that the circumstances upon which the original variance was granted have not changed. Specifically demonstrate that there have been no significant changes on the site, in the neighborhood, or within the circumstances upon which the original variance was granted:

_____

_____

_____

_____

_____

_____

USE VARIANCE – PLEASE ANSWER THE FOLLOWING (add additional information as necessary):

A use variance is requested to permit the following: _____

_____

_____

For the Zoning Board to grant a request for a use variance, an applicant must prove that the zoning regulations create an unnecessary hardship in relation to that property. In seeking a use variance, New York State law requires an applicant to prove all four of the following "tests".

1. That the applicant cannot realize a reasonable financial return on initial investment for any currently permitted use on the property. "Dollars & cents" proof must be submitted as evidence. The property in question cannot yield a reasonable return for the following reasons:

_____

_____

_____

_____

_____

_____

A. Submit the following financial evidence relating to this property (attach additional evidence as needed):

1) Date of purchase: _____ Purchase amount: $_____

2) Indicate dates and costs of any improvements made to property after purchase:

Date	Improvement	Cost

3) Annual maintenance expenses: $_____ 4) Annual taxes: $_____

5) Annual income generated from property: $_____

6) City assessed value: $_____ Equalization rate:_____ Estimated Market Value: $_____

7) Appraised Value: $_____ Appraiser: _____Date: _____

Appraisal Assumptions:_____

B. Has property been listed for sale with the Multiple Listing Service (MLS)? ☐Yes ☐No If "yes", for how long? _____

1) Original listing date(s):_____ Original listing price: $_____

If listing price was reduced, describe when and to what extent: _____

_____

2) Has the property been advertised in the newspapers or other publications? ☐Yes ☐No

If yes, describe frequency and name of publications: _____

_____

3) Has the property had a "For Sale" sign posted on it? ☐Yes ☐No

If yes, list dates when sign was posted: _____

_____

4) How many times has the property been shown and with what results? _____

_____

_____

2. That the financial hardship relating to this property is unique and does not apply to a substantial portion of the neighborhood. Difficulties shared with numerous other properties in the same neighborhood or district would not satisfy this requirement. This previously identified financial hardship is unique for the following reasons:

_____

_____

_____

_____

_____

_____

_____

_____

_____

_____

3. That the variance, if granted, will not alter the essential character of the neighborhood. Changes that will alter the character of a neighborhood or district would be at odds with the purpose of the Zoning Ordinance. The requested variance will not alter the character of the neighborhood for the following reasons:

4. That the alleged hardship has not been self-created. An applicant (whether the property owner or one acting on behalf of the property owner) cannot claim "unnecessary hardship" if that hardship was created by the applicant, or if the applicant acquired the property knowing (or was in a position to know) the conditions for which the applicant is seeking relief. The hardship has not been self-created for the following reasons:

AREA VARIANCE – **PLEASE ANSWER THE FOLLOWING** (add additional information as necessary):

The applicant requests relief from the following Zoning Ordinance article(s) 6.0 Signage

Dimensional Requirements	From	To
please see attached Application Narrative		

Other: _____

To grant an area variance, the ZBA must balance the benefits to the applicant and the health, safety, and welfare of the neighborhood and community, taking into consideration the following:

1. Whether the benefit sought by the applicant can be achieved by other feasible means. Identify what alternatives to the variance have been explored (alternative designs, attempts to purchase land, etc.) and why they are not feasible.

   Please see attached Application Narrative

2. Whether granting the variance will produce an undesirable change in the character of the neighborhood or a detriment to nearby properties. Granting the variance will not create a detriment to nearby properties or an undesirable change in the neighborhood character for the following reasons:

   Please see attached Application Narrative

3. Whether the variance is substantial. The requested variance is not substantial for the following reasons:
Please see attached Application Narrative

4. Whether the variance will have adverse physical or environmental effects on neighborhood or district. The requested variance will not have an adverse physical or environmental effect on the neighborhood or district for the following reasons:
Please see attached Application Narrative

5. Whether the alleged difficulty was self-created (although this does not necessarily preclude the granting of an area variance). Explain whether the alleged difficulty was or was not self-created:
Please see attached Application Narrative

DISCLOSURE

Does any City officer, employee, or family member thereof have a financial interest (as defined by General Municipal Law Section 809) in this application? ☑ No ☐ Yes If "yes", a statement disclosing the name, residence and nature and extent of this interest must be filed with this application.

APPLICANT CERTIFICATION

I/we, the property owner(s), or purchaser(s)/lessee(s) under contract, of the land in question, hereby request an appearance before the Zoning Board of Appeals.

By the signature(s) attached hereto, I/we certify that the information provided within this application and accompanying documentation is, to the best of my/our knowledge, true and accurate. I/we further understand that intentionally providing false or misleading information is grounds for immediate denial of this application.

Furthermore, I/we hereby authorize the members of the Zoning Board of Appeals and designated City staff to enter the property associated with this application for purposes of conducting any necessary site inspections relating to this appeal.

National Retail Properties, Inc.

By: _____ Date: 6-8-16

(applicant signature)

David J. Reif, its Senior Vice President, Leasing + Construction

_____ Date: _____

(applicant signature)

If applicant is not the currently the owner of the property, the current owner must also sign.

National Retail Properties, Inc.

Owner Signature: By: _____ Date: 6-8-16

David J. Reif, its Senior Vice President, Leasing + Construction

Owner Signature: _____ Date: _____

RITE AID

Application for Area Variances: Signage

The signage chart below references the site plan (page 5 of 19) and the elevations (page 6 of 19) attached to this application. For purposes of this application, we have deemed the diagonal facing the intersection to be part of the Washington Street frontage. As such, the Washington Street frontage has one channel letter sign and one shield. The sign numbers correlate to the locations on the site plan

Dimensional Requirements	Code	From	To	Sign Numbers
Washington Street Façade				
1. One wall sign per street frontage	6.1.5.1(A)(2)	1	2	1, 2
2. No signs above 1st floor level	6.1.5.1(A)(2)	1st Fl.	2nd Fl.	1, 2
3. Maximum letter height	6.1.6(B)(3)	18"	30"	1, 2
West Avenue Façade				
1. One wall sign per street frontage	6.1.5.1(A)(2)	1	7	1, 2, 3, 4, 5, 8, 9
2. Maximum signage area	6.1.5.1(C)	100 SF	139 SF	
3. No signs above 1st floor level	6.1.5.1(B)(2)	1st Fl.	2nd Fl.	1, 3
4. Maximum letter height	6.1.6(B)(3)	18"	30"	1, 2, 3, 5, 9
Parking Lot Façade				
1. One wall sign per street frontage	6.1.5.1(A)	0	7	1, 3, 4, 5, 8-13
2. Maximum signage area	6.1.5.1(C)	0 SF	145 SF	
3. No signs above 1st floor level	6.1.5.1(A)(2)	1st Fl.	2nd Fl.	1, 3, 10-13
4. Maximum letter height	6.1.6(B)(3)	18"	30"	
Free-Standing Pylon Sign				
1. Maximum signage area	6.1.5.1(C)	12 SF	45 SF	6
Temporary Banner				
1. Temporary banner during construction	Not permitted	0	32 SF	7
Free Standing Directional				
1. Free standing drive-thru pharmacy	Not permitted	0	2	16, 17
Exit Only Signs				
1. Two Exit Only signs	6.1.4(B)(7)	Permitted under 4 SF		14, 15

RITE AID

PERMIT DRAWINGS

RITE AID #581
90 WEST AVE.
SARATOGA SPRINGS, NY 12866

SignResource
IDENTITY GROUP
6135 District Blvd • Maywood, CA 90270
800.423.4283 • Fax 323.560.7143
Website: www.signresource.com

Sign Code Allows:	Site:			
Sign#	**Sign Type:**	**Qty:**	**Description:**	**Comments**
1	Channel letters	3	30" Channel letters	
2	Shield	2	Rite Aid shield cabinet	
3	Pharmacy	2	20" Pharmacy letters	
4	GNC Live Well	2	24" box cabinet	
5	Drive Thru	2	24" box cabinet	
6	Pylon	1	12' -0" Pylon	
7	Banner	2	Temporary Coming Soon banner	
8	Channel letters	2	Drive Thru Pharmacy with arrow on raceway	
9	Aluminum Panel	2	Department Within	
10	Channel letters	1	Drive Thru Pharmacy	
11	Aluminum Panel	1	Clearance 10' -0"	
12	Aluminum Panel	1	Pick Up	
13	Aluminum Panel	1	Drop Off	
14	Aluminum Panel	1	Exit Only	
15	Aluminum Panel	1	Exit Only traffic	
16	Directional	1	Drive Thru Pharmacy with arrow - both sides	
17	Directional	1	Drive Thru Pharmacy with arrow - Thank You For Shopping at Rite Aid	
Variance Summary / Likelihood:				

SignResource
IDENTITY GROUP
6135 District Blvd • Maywood, CA 90270
800.423.4283 • Fax 323.560.7143
Website: www.signresource.com

STANDARD CODE REVIEW

Estimate/Job#: 98147
Store #: 581

A.) Project Name: **Rite Aid** Completed By and Date: **8-27-13 / SP**

Street Address: **90 West Ave**

Town / City / State / Zip: **Saratoga Springs NY 12866**

B.) Zoning Office / contact for zoning information: ☑ City ☐ Town ☐ Township ☐ Village ☐ County ☐ State

Jurisdiction: **City of Saratoga Springs**

Contact: **Deborah Wertheim 518-587-3550 x 2533 / Susan Barden, Senior Planner x 2493**

C.) Zoning Classification for property: **T-5 Transect Zone 5 Neighborhood Center**

D.) Will code be changing anytime soon? **No**

Notes:

WALL SIGNS

1.) Square footage of wall signage allowed: **Not to exceed 2 sq. ft. for each linear foot of building frontage or a total of 100 sq. ft., whichever is less.**

2.) How many elevations are wall signs allowed on? **One (1) wall sign per street frontage**

3.) If signs are allowed on rear or sides of building, is the square footage deducted from the front elevation? **No**

4.) How is square footage to be calculated? **Entire area within a continuous perimeter enclosing the extreme limits of sign display, including any frame or border. The sign structure shall be included if designed as integral to the sign display. The calculation for a double-faced sign shall be the area of one face only.**

5.) Are design elements or logos a part of the square footage calculation? **Yes**

6.) May signs be internally illuminated? **All backlit signs shall have a dark background. Only the letters and/or message area of the sign shall be illuminated.**

7.) Any restrictions to the location of the sign on the wall other than being located on the wall, below eaves, or on the parapet? **Wall signs shall not extend beyond the ends, or over the top, of the walls to which it is attached. Wall signs shall not extend above the first floor level of the building**

8.) Maximum projection for wall signs: **Electric wall signs may extend a total of 14 inches from the face of the building to accommodate a code-required transformer box but that box shall not extend more than 8 inches from the building.**

Notes:

POLE/PYLON SIGNS

1.) Square footage of pole/pylon signage allowed per sign face for a double-faced sign: **24 Sq. Ft.**

2.) Quantity: **One (1)**

3.) Maximum height for pole/pylon: **12 feet**

4.) Minimum clearance below pole/pylon? **Signs that extend over a pedestrian walkway or driveway must have a minimum 10 foot vertical clearance from the ground.**

5.) Are design elements or logos a part of the square footage calculation? **Yes**

6.) May signs be internally illuminated? **Yes. All backlit signs shall have a dark background. Only the letters and/or message area of the sign shall be illuminated.**

7.) Landscaping requirements:

8.) Address number to be included?

9.) Set-back from right-of-way or property line/vision triangle: **No sign shall be placed within 150 feet of a signalized, or within 50 feet of an unsignalized, street intersection so as to cause a traffic hazard at the intersection. A freestanding sign shall not be located within 50 feet of another freestanding sign. A freestanding sign shall not extend into the public right-of-way or extend beyond the property lines.**

Notes:

STANDARD CODE REVIEW - Continued

Estimate/Job#: 581 98147

A.) Project Name: **Rite Aid** Completed: **8-27-13 / SP**

ENGINEERING

1.) Are signed/sealed Engineering drawings required: For wall signs? **No** For Freestanding signs? **Yes**

2.) Calculations and drawings both required? **Both**

3.) How many sets required? **Two (2)**

4.) Building Code/Year: **2010 New York State Building Code**

5.) Electrical Code/Year: **NFPA 70**

6.) Wind loads/Exposure: **90 MPH w/ 3 sec gusts**

7.) Special inspections noted on drawings from engineer: **Per Engineer**

Notes:

VARIANCES

1.) Are variances considered? ---------- **Yes** ☑ **No** ☐

2.) Variance fees and costs? **$500.00 + fees for advertising**

3.) Application deadline? **Must be submitted to the Building Inspector, Room 10, City Hall, at least 4 weeks prior to the next Zoning Board meeting. See attached schedule for applicationd deadlines and meeting dates.**

4.) Process, how often are the meetings, and the number of meetings? **Zoning Board of Appeals meets twice a month**

5.) Forms and contact information: **Application for Appeal to Zoning Board / Contact Susan Barden Senior Planner (ZBA) (518) 587-3550 x2493**

Notes: **Applicant must be the property owner(s) or lessee. Applicants are required to mail a copy of the public hearing legal notice to all property owners**

DIRECTIONAL SIGNS

1.) Number of directional's allowed: **Not specified** 2) Maximum square footage: **4 sq. ft.**

3.) Maximum height: **4 feet** 4) Set-back:

5.) Illumination allowed? **Yes** 6) Custom logo: **Business names or logos not permitted**

7.) Permit required? **No**

Notes:

ELECTRONIC MESSAGE CENTERS/ READER BOARDS

1.) EMC's allowed: **Not allowed** 2.) Maximum square

3.) Color restrictions? 4.) Movement restrictions?

Notes:

AWNINGS AND TEMPORARY SIGNAGE

3.) Temporary Signs: **One on-premise, non-illuminated sign listing the owner, designer and/or contractor where construction or renovation is in progress: maximum 10 sq. ft.**

Notes:

SignResource IDENTITY GROUP
6135 District Blvd • Maywood, CA 90270
800.423.4283 • Fax 323.560.7143
Website: www.signresource.com

STANDARD CODE REVIEW - Continued

Estimate/Job#: 98147

A.) Project Name: **Rite Aid** Completed: **8-27-13 / SP**

PERMITTING

1.) Process:

What needs to be done first? **Must apply for variance first if needed. Once variance is approved/denied will then have to apply for review with the Design Review Commission since site is located in an Architectural Review Area within the City.**
For Design Review Commission: Submit completed applications to the Office of Planning & Economic Development, Room 10, City Hall, at least 4 weeks prior to the next DRC meeting. Meetings are held 1st & 3rd Wednesdays of the month. Fee is $100.00. Rep to be present at this meeting.
Signage / Awnings
Color photographs showing site/exterior details of existing structures, and adjacent properties
Plan showing location of proposed sign/awning structure on building/premises: no larger than 11"x17"
Scaled illustration of proposed sign/awning structure and lettering (front view & profile): include all dimensions of structure; type, dimensions and style of lettering or logo; description of colors, materials, mounting method and hardware
Descriptions, specifications of proposed lighting including fixture & lamp type, wattage, mounting method, and location
Product literature, specifications and samples of proposed materials and colors

Can the sign permit be issued before the building permit? **No**

Other jurisdiction? **No**

2.) Permit application and checklist:

Planning: **Design Review Commission Application**

Building: **Application for Sign Permit**

Number of Sets of Drawings Req'd: **1 original and 9 collated sets for DRC meeting / Two (2) for building**

Permit application can be mailed? **Yes**

3.) Permitting Process time frame:

Planning: **Goes thru Design Review Commission for approval. If needed, apply for Variance first thru ZBA then goes to DRC**

Building:

Counter Service Available? **No**

4.) Permit application fees:

Planning: **$100.00 for Design Review Commission**

Building: **Sign permit fee of $100.00 (check made payable to Commissioner of Finance), must accompany application.**

5.) Length of time the permit will be valid: **6 months**

		SIGN MARKINGS
☐ Electrical Hook-up included with Sign Permit	☑ Property Owner Information	☑ UL label visible after installation
☑ Electrical Permit Req'd by Licensed Electrician	☑ Property Owner Signature on Application	☑ Disconnect visible after installation
☐ Building/Structural Permit Req'd	☑ Subcontractor Information	☐ Permit number and/or tag
☑ Sealed Engineering Req'd	☑ Subcontractor Signature on Application	☐ Sign owner information
☑ Owner/Agent Letter of Authorization	☐ List of UL numbers	☐ Sign manufacturer information

5.) Is a permit required to reface or change faces in an existing sign with no changes to the support structure, electrical, or cabinet**?**

Notes:

INSTALLATION

1.) Inspections Required**? Footing / Final / Electrical**

Is the original permit required to be on site for inspections? **Yes**

Any Special/Third Party Inspections Required? **No**

Contact and advance notice requirements: **(518) 587-3550 Building Department**

2.) Commercial Sign Installer Requirements:

☐ **State License**	☐ **Bonding**	☑ **Sub Required to Pull Permit**
☑ **Local License or Registration**	☑ **Insurance**	☑ **Sub Required for Install**
☑ **Licensed Electrician Req'd for hook-up**	☑ **Workman's Compensation**	☐ **Jones Sign Can Pull Permit**
☐ **Out-of-State Contractor Allowed**		☐ **Jones Sign Can Install**

Notes**: City license required with Insurance**

RECOMMENDATION

SignResource IDENTITY GROUP
6135 District Blvd • Maywood, CA 90270
800.423.4283 • Fax 323.560.7143
Website: www.signresource.com

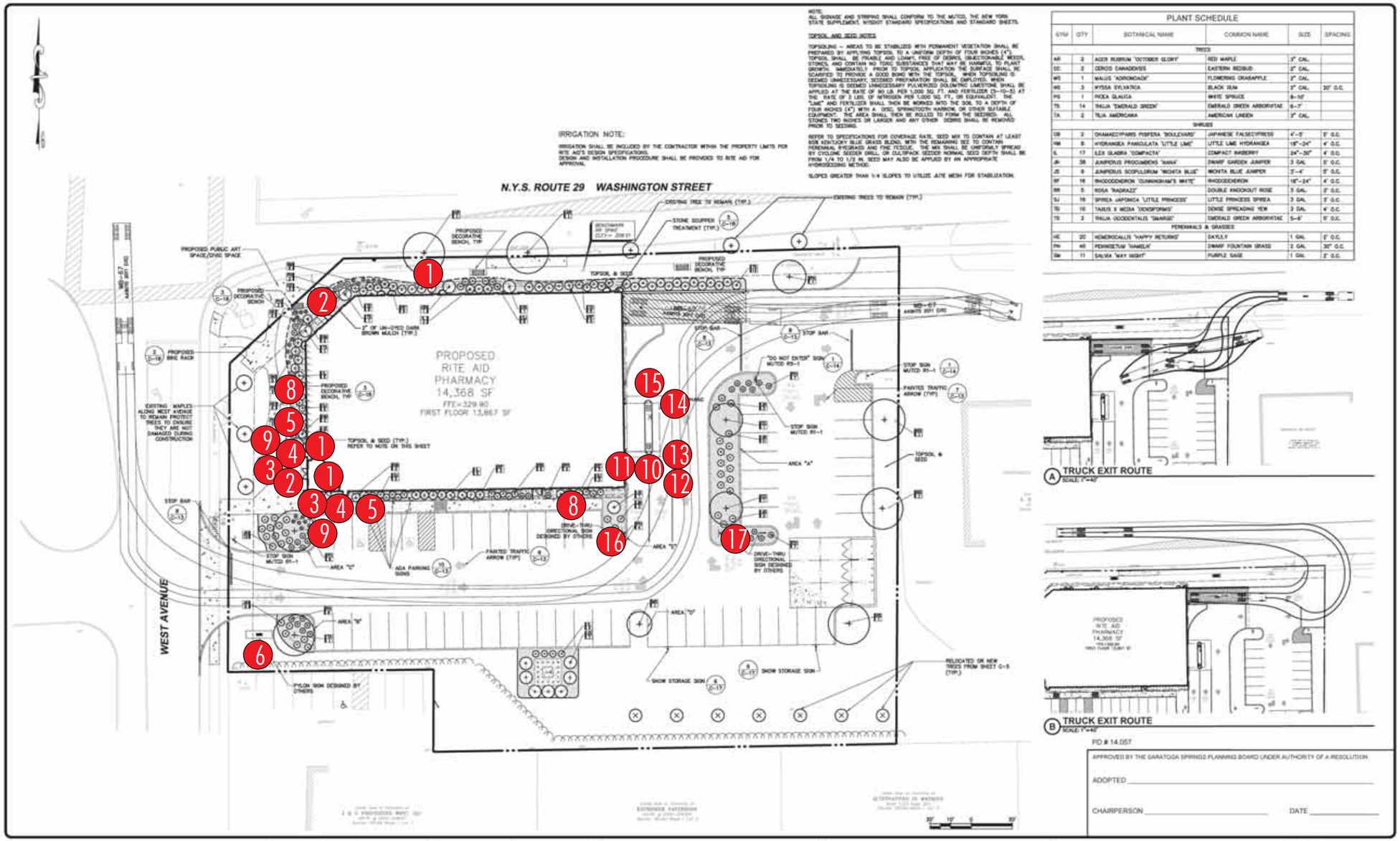

PLANT SCHEDULE					
SYM	QTY	BOTANICAL NAME	COMMON NAME	SIZE	SPACING
TREES					
AR	2	ACER RUBRUM 'OCTOBER GLORY'	RED MAPLE	3" CAL.	
CC	2	CERCIS CANADENSIS	EASTERN REDBUD	3" CAL.	
MS	1	MALUS 'ADIRONDACK'	FLOWERING CRABAPPLE	3" CAL.	
NS	3	NYSSA SYLVATICA	BLACK GUM	3" CAL.	20' O.C.
PG	1	PICEA GLAUCA	WHITE SPRUCE	8-10'	
TS	14	THUJA 'EMERALD GREEN'	EMERALD GREEN ARBORVITAE	6-7'	
TA	2	TILIA AMERICANA	AMERICAN LINDEN	3" CAL.	
SHRUBS					
CB	2	CHAMAECYPARIS PISIFERA 'BOULEVARD'	JAPANESE FALSECYPRESS	4'-5'	5' O.C.
HM	8	HYDRANGEA PANICULATA 'LITTLE LIME'	LITTLE LIME HYDRANGEA	18"-24"	4' O.C.
IL	17	ILEX GLABRA 'COMPACTA'	COMPACT INKBERRY	24"-30"	4' O.C.
JH	38	JUNIPERUS PROCUMBENS 'NANA'	DWARF GARDEN JUNIPER	3 GAL.	5' O.C.
JS	9	JUNIPERUS SCOPULORUM 'WICHITA BLUE'	WICHITA BLUE JUNIPER	3'-4'	5' O.C.
RF	16	RHODODENDRON 'CUNNINGHAM'S WHITE'	RHODODENDRON	18"-24"	4' O.C.
RR	5	ROSA 'RADRAZZ'	DOUBLE KNOCKOUT ROSE	3 GAL.	3' O.C.
SJ	19	SPIREA JAPONICA 'LITTLE PRINCESS'	LITTLE PRINCESS SPIREA	3 GAL.	3' O.C.
TD	10	TAXUS X MEDIA 'DENSIFORMIS'	DENSE SPREADING YEW	3 GAL.	4' O.C.
TO	2	THUJA OCCIDENTALIS 'SMARGD'	EMERALD GREEN ARBORVITAE	5-6'	5' O.C.
PERENNIALS & GRASSES					
HE	20	HEMEROCALLIS 'HAPPY RETURNS'	DAYLILY	1 GAL.	2' O.C.
PM	40	PENNISETUM 'HAMELN'	DWARF FOUNTAIN GRASS	2 GAL.	30" O.C.
SM	11	SALVIA 'WAY INSIGHT'	PURPLE SAGE	1 GAL.	2' O.C.

SUBMITTAL / REVISIONS						
No.	DATE	DESCRIPTION	BY	REVIEWED BY	DATE	
1	-	SARATOGA SPRINGS PLANNING BOARD		JWE	2/17/15	
2	12/23/15	SUBMISSION TO PLANNER	AML	JWE	12/23/15	
3	2/3/16	REVISION TO ARCHITECTURE, LAYOUT AND GRADING	AML	JWE	2/3/16	
4	2/8/2016	REVISIONS	AML	JWE	2/8/2016	

PROJ. MANAGER	JBH
CHIEF DESIGNER	JWE
DESIGNED BY	JLM
DRAWN BY	JLM
CHECKED BY	JWE

DATE DATE

THE ALTERATION OF THIS MATERIAL IS A VIOLATION OF LAW UNLESS DONE UNDER THE DIRECTION OF A COMMISSIONED PROFESSIONAL (I.E.) ARCHITECT FOR AN ARCHITECT, ENGINEER FOR AN ENGINEER OR LANDSCAPE ARCHITECT FOR A LANDSCAPE ARCHITECT, IS A VIOLATION OF STATE EDUCATION LAW AND/OR REGULATIONS AND IS A CLASS "A" MISDEMEANOR.

DRAFT

Engineering and Land Surveying, P.C.
1533 Crescent Road - Clifton Park, NY 12065

NATIONAL RETAIL PROPERTIES
LANDSCAPING AND SITE TRAFFIC CONTROL
SARATOGA RITE AID SITE PLAN
90 WEST AVENUE
CITY OF SARATOGA SARATOGA COUNTY, NY

SCALE: 1" = 20'
CONTRACT No.
NJ PROJ. No. 934.01
DATE: 2/8/2016

C-10

SignResource IDENTITY GROUP
6135 District Blvd • Maywood, CA 90270
800.423.4283 • Fax 323.560.7143
Website: www.signresource.com

RITE AID

SignResource
IDENTITY GROUP
6135 District Blvd • Maywood, CA 90270
800.423.4283 • Fax 323.560.7143
Website: www.signresource.com

NON-ILLUMINATED

REQUIRED INFO: METHOD OF SERVICE IS REMOVAL OF FACE

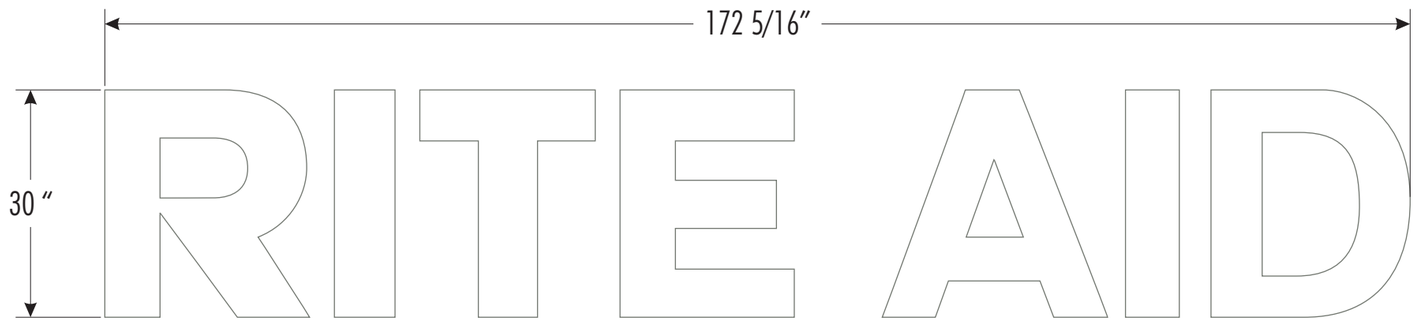

FRONT VIEW

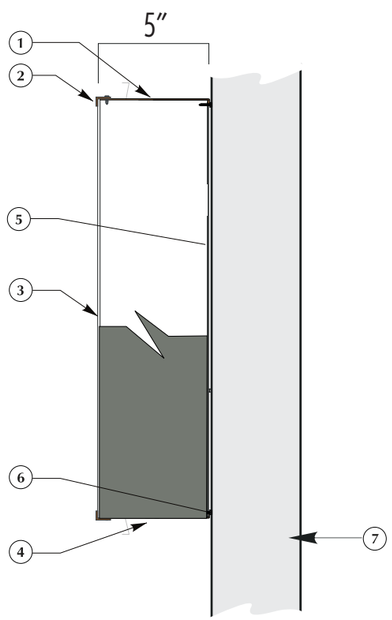

1. 5" X .040 aluminum letter coil painted pms 424 letter locked to aluminum letter backs
2. 3/8" x 1 1/4" F- Trim painted pms 424
3. .150 White polycarbonate faces (Groove face side of lexan faces to ensure face side is facing out)
4. (2) 1/4" Weep holes w/ internal light baffle
5. .063 pre-finished Black/White aluminum backs
6. Anchors as required. (See hardware chart.)
7. Building facade.

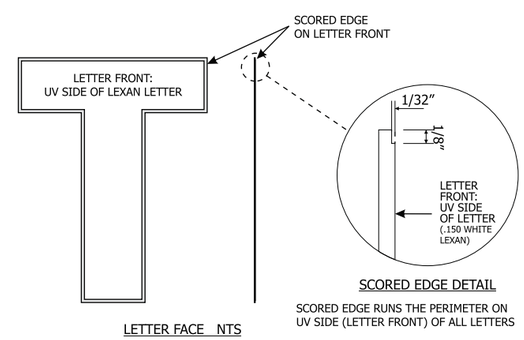

Detail of Channel Letters

N.T.S.

SIDE VIEW

1

APPROVAL SIGNATURE _____ **DATE** _____

By signing, you are validating the dimensions and graphic provided to SignResource and/or you are handling your own installation.

Please Note: Weights and Measures requirements vary by State, County and Municipality. It is the responsibility of the customer to confirm that these graphics are compliant with all local Regulations, Statues and Ordinances. Compliancy must be confirmed by the party obtaining the permit. SignResource is not liable for misinterpretation of local Weights and Measures requirements or any rule changes that may occur after the order has been placed. If permitting and installation is provided by SignResource, we will make every effort to confirm the signage provided is compliant at the time of installation.

SignResource IDENTITY GROUP
6135 District Blvd • Maywood, CA 90270
800.423.4283 • Fax 323.560.7143
Website: www.signresource.com

REVISION HISTORY:

REV	DATE	REQUESTED BY	UPDATED BY
A	05/16/16	TL	BS

REVISION DESCRIPTION: INITIAL DRAWING

PARTS LIST:

ITEM	DECORATION
A	WHITE
B	PAINT TO MATCH PMS 424
C	
D	
E	
F	

	MATERIAL LIST
1	5" ALUMINUM RETURNS
2	.150 WHITE PLASTIC
3	
4	
5	

THIS SIGN IS INTENDED TO BE INSTALLED IN ACCORDANCE WITH THE REQUIREMENTS OF ARTICLE 600 OF THE NATIONAL ELECTRIC CODE AND/OR OTHER APPLICABLE LOCAL CODES. THIS INCLUDES PROPER GROUNDING AND BONDING OF THE SIGN

GENERAL NOTES

1. TOLERANCE (UNLESS NOTED)
   - GRAPHICS +/-1/8" • FACE SIZE + 1/16"-¼"
   - CABINET +/- 1/8" • VINYL OVERLAP + 1/8"+/ 1/16"
   - ALL COPY LEVEL UNLESS NOTED OTHERWISE
2. VIEWING DISTANCE 25' TO 50' UNLESS NOTED OTHERWISE
3. PMS COLOR CALLOUT INDICATES USE OF SPRAYLAT MIX SYSTEM
4. NO DEVIATION OR MATERIAL SUBSTITUTION WITHOUT ECN.
5. ALL ELECTRICAL SIGNS TO COMPLY WITH UL 48

DESCRIPTION

RITEAID
30" X 172 5/16" SF NL
CHANNEL LETTERS

VOLTAGE: CIRCUIT: CURRENT: DESIGN LOAD:

DRAWN BY: BRIAN S. CHECKED BY:

CLIENT: RITEAID

LOCATION:

QUOTE: DATE:

DRAWING/PART # RAV0029 REV. A SHEET # 7 OF 19

This document reflects trade secrets and confidential business information, and may not be copied, published, or disseminated in any manner without the prior express written approval of SignResource. All rights reserved, including patent, trademark and copyrights.

NON-ILLUMINATED

REQUIRED INFO: METHOD OF SERVICE IS REMOVAL OF FACE

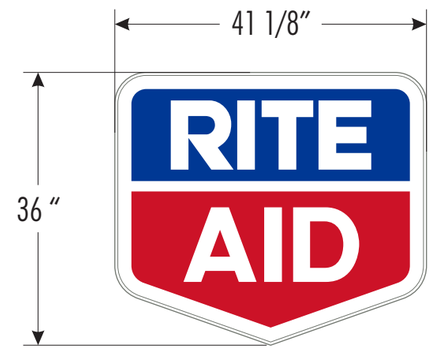

FRONT VIEW

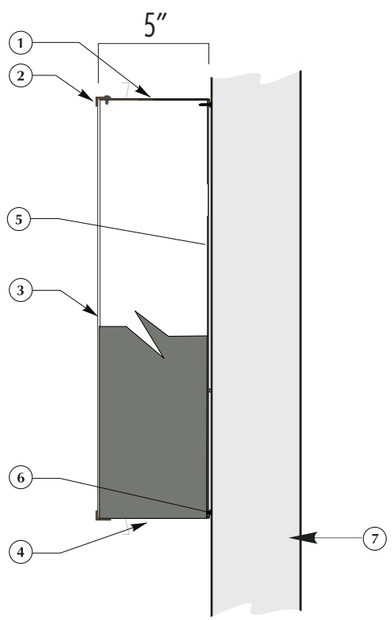

1. 5″ X .040 aluminum letter coil painted pms 424 letter locked to aluminum letter backs
2. 3/8″ x 1 1/4″ F- Trim painted pms 424
3. .150 White polycarbonate faces (Groove face side of lexan faces to ensure face side is facing out)
4. (2) 1/4″ Weep holes w/ internal light baffle
5. .063 pre-finished Black/White aluminum backs
6. Anchors as required. (See hardware chart.)
7. Building facade.

Detail of Channel Letters

N.T.S.

SIDE VIEW

2

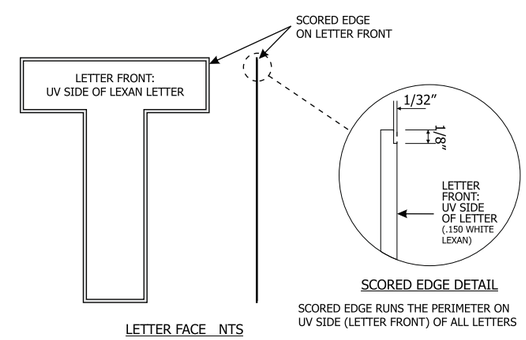

SCORED EDGE DETAIL

SCORED EDGE RUNS THE PERIMETER ON UV SIDE (LETTER FRONT) OF ALL LETTERS

LETTER FACE NTS

APPROVAL SIGNATURE _____ **DATE** _____

By signing, you are validating the dimensions and graphic provided to SignResource and/or you are handling your own installation.

Please Note: Weights and Measures requirements vary by State, County and Municipality. It is the responsibility of the customer to confirm that these graphics are compliant with all local Regulations, Statues and Ordinances. Compliancy must be confirmed by the party obtaining the permit. SignResource is not liable for misinterpretation of local Weights and Measures requirements or any rule changes that may occur after the order has been placed. If permitting and installation is provided by SignResource, we will make every effort to confirm the signage provided is compliant at the time of installation.

SignResource IDENTITY GROUP
6135 District Blvd • Maywood, CA 90270
800.423.4283 • Fax 323.560.7143
Website: www.signresource.com

REVISION HISTORY:

REV	DATE	REQUESTED BY	UPDATED BY
A	05/16/16	TL	BS

REVISION DESCRIPTION: INITIAL DRAWING

PARTS LIST:

ITEM	DECORATION
A	ARLON 2500-2870 BLUE
B	ARLON 2500-2283 RED
C	WHITE
D	PAINT TO MATCH PMS 424
E	
F	

	MATERIAL LIST
1	5" ALUMINUM RETURNS
2	.150 WHITE PLASTIC
3	
4	
5	

THIS SIGN IS INTENDED TO BE INSTALLED IN ACCORDANCE WITH THE REQUIREMENTS OF ARTICLE 600 OF THE NATIONAL ELECTRIC CODE AND/OR OTHER APPLICABLE LOCAL CODES. THIS INCLUDES PROPER GROUNDING AND BONDING OF THE SIGN

GENERAL NOTES

1. TOLERANCE (UNLESS NOTED)
   - GRAPHICS +/-1/8″ • FACE SIZE + 1/16″-¼″
   - CABINET +/- 1/8″ • VINYL OVERLAP + 1/8″+/ 1/16″
   - ALL COPY LEVEL UNLESS NOTED OTHERWISE
2. VIEWING DISTANCE 25′ TO 50′ UNLESS NOTED OTHERWISE
3. PMS COLOR CALLOUT INDICATES USE OF SPRAYLAT MIX SYSTEM
4. NO DEVIATION OR MATERIAL SUBSTITUTION WITHOUT ECN.
5. ALL ELECTRICAL SIGNS TO COMPLY WITH UL 48

DESCRIPTION

RITEAID
36″ X 48 1/8″ SF NL
CHANNEL LETTER

VOLTAGE: CIRCUIT: CURRENT: DESIGN LOAD:

DRAWN BY: BRIAN S. CHECKED BY:

CLIENT: RITEAID

LOCATION:

QUOTE: DATE:

DRAWING/PART # RAV0030 REV. A SHEET # 8 OF 19

This document reflects trade secrets and confidential business information, and may not be copied, published, or disseminated in any manner without the prior express written approval of SignResource. All rights reserved, including patent, trademark and copyrights.

NON-ILLUMINATED

REQUIRED INFO: METHOD OF SERVICE IS REMOVAL OF FACE

FRONT VIEW

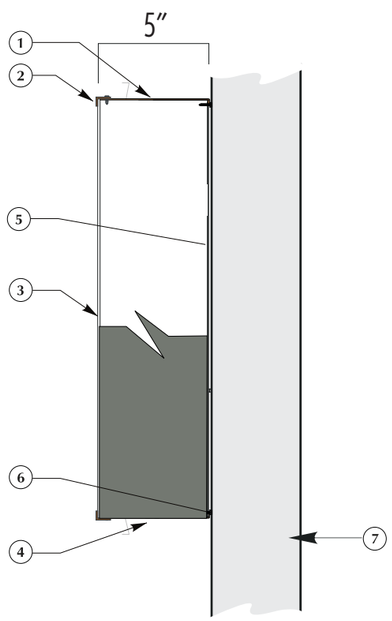

1. 5" X .040 aluminum letter coil painted pms 424 letter locked to aluminum letter backs
2. 3/8" x 1 1/4" F- Trim painted pms 424
3. .150 White polycarbonate faces (Groove face side of lexan faces to ensure face side is facing out)
4. (2) 1/4" Weep holes w/ internal light baffle
5. .063 pre-finished Black/White aluminum backs
6. Anchors as required. (See hardware chart.)
7. Building facade.

Detail of Channel Letters

N.T.S.

SIDE VIEW

3

PART #: RA0214CVR

TEMPORARY WHITE BANNER COVERS QTY: **2**

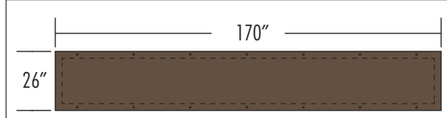

COVERS PHARMACY LETTERS ONLY
COVERS MUST BE OPAQUE.

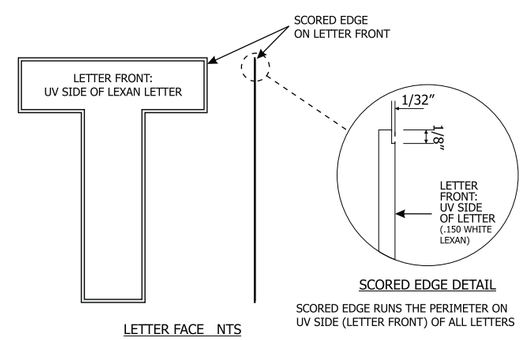

LETTER FACE NTS

SCORED EDGE DETAIL

SCORED EDGE RUNS THE PERIMETER ON UV SIDE (LETTER FRONT) OF ALL LETTERS

SCALE 1:17
22.46 SF

SignResource IDENTITY GROUP
6135 District Blvd • Maywood, CA 90270
800.423.4283 • Fax 323.560.7143
Website: www.signresource.com

REVISION HISTORY:

REV	DATE	REQUESTED BY	UPDATED BY
A	05/16/16	TL	BS

REVISION DESCRIPTION: INITIAL DRAWING

PARTS LIST:

ITEM	DECORATION
A	WHITE
B	PAINT TO MATCH PMS 424
C	
D	
E	
F	

	MATERIAL LIST
1	5" ALUMINUM RETURNS
2	.150 WHITE PLASTIC
3	
4	
5	

THIS SIGN IS INTENDED TO BE INSTALLED IN ACCORDANCE WITH THE REQUIREMENTS OF ARTICLE 600 OF THE NATIONAL ELECTRIC CODE AND/OR OTHER APPLICABLE LOCAL CODES. THIS INCLUDES PROPER GROUNDING AND BONDING OF THE SIGN

GENERAL NOTES

1. TOLERANCE (UNLESS NOTED)
   - GRAPHICS +/-1/8" • FACE SIZE + 1/16"-¼"
   - CABINET +/- 1/8" • VINYL OVERLAP + 1/8"+/ 1/16"
   - ALL COPY LEVEL UNLESS NOTED OTHERWISE
2. VIEWING DISTANCE 25' TO 50' UNLESS NOTED OTHERWISE
3. PMS COLOR CALLOUT INDICATES USE OF SPRAYLAT MIX SYSTEM
4. NO DEVIATION OR MATERIAL SUBSTITUTION WITHOUT ECN.
5. ALL ELECTRICAL SIGNS TO COMPLY WITH UL 48

DESCRIPTION
RITEAID
20" X 161 11/16"
SF NL CHANNEL LETTERS

VOLTAGE: CIRCUIT: CURRENT: DESIGN LOAD:

DRAWN BY: BRIAN S. CHECKED BY:

CLIENT: RITEAID

LOCATION:

QUOTE: DATE:

DRAWING/PART # RAV0031 REV. A SHEET # 9 OF 19

This document reflects trade secrets and confidential business information, and may not be copied, published, or disseminated in any manner without the prior express written approval of SignResource. All rights reserved, including patent, trademark and copyrights.

APPROVAL SIGNATURE _____ **DATE** _____

By signing, you are validating the dimensions and graphic provided to SignResource and/or you are handling your own installation.

Please Note: Weights and Measures requirements vary by State, County and Municipality. It is the responsibility of the customer to confirm that these graphics are compliant with all local Regulations, Statues and Ordinances. Compliancy must be confirmed by the party obtaining the permit. SignResource is not liable for misinterpretation of local Weights and Measures requirements or any rule changes that may occur after the order has been placed. If permitting and installation is provided by SignResource, we will make every effort to confirm the signage provided is compliant at the time of installation.

NON-ILLUMINATED

REQUIRED INFO: METHOD OF SERVICE IS A HINGED FACE

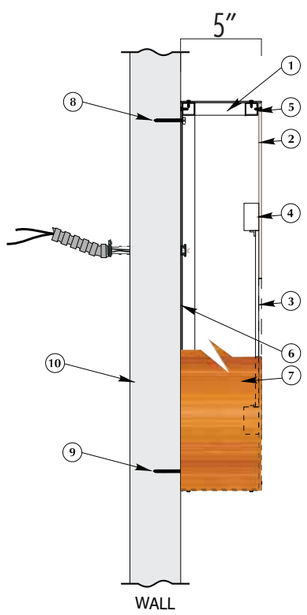

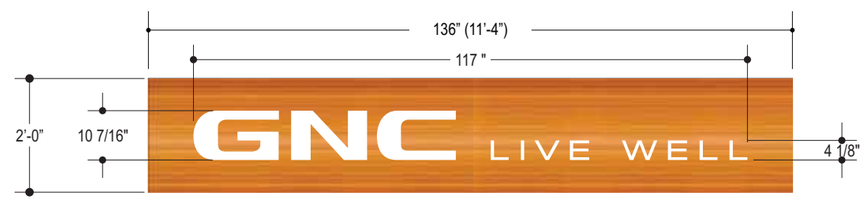

1. 1"x 1"x .125 Aluminum tube frame
2. Hinged Face: Routed ACM by Reynobond - Scottish Oakwood Grain
3. .150 White polycarbonate backer
4. 1"x 2" Alum Tube w/ ¾" x ¾" Alum angle
5. Pop rivet attachment
6. .080 aluminum backs
7. Sides: ACM by Reynobond - Scottish Oakwood Grain
8. Masonry fasteners used in top section of cabinets
9. Lagbolts used in bottom section of cabinets
10. Building facade.

Detail of Sign Cabinet

N.T.S.

4

APPROVAL SIGNATURE _____ **DATE** _____

By signing, you are validating the dimensions and graphic provided to SignResource and/or you are handling your own installation.

Please Note: Weights and Measures requirements vary by State, County and Municipality. It is the responsibility of the customer to confirm that these graphics are compliant with all local Regulations, Statues and Ordinances. Compliancy must be confirmed by the party obtaining the permit. SignResource is not liable for misinterpretation of local Weights and Measures requirements or any rule changes that may occur after the order has been placed. If permitting and installation is provided by SignResource, we will make every effort to confirm the signage provided is compliant at the time of installation.

SignResource IDENTITY GROUP
6135 District Blvd • Maywood, CA 90270
800.423.4283 • Fax 323.560.7143
Website: www.signresource.com

REVISION HISTORY:

REV	DATE	REQUESTED BY	UPDATED BY
A	05/16/16	TL	BS

REVISION DESCRIPTION: INITIAL DRAWING

PARTS LIST:

ITEM	DECORATION
A	SCOTTISH OAKWOOD GRAIN
B	WHITE
C	
D	
E	
F	

	MATERIAL LIST
1	.125 ALUMINUM TUBE FRAME (1"x 1")
2	.150 WHITE PLASTIC
3	ROUTED ACM BY RENOBOND
4	LED ILLUMINATION
5	

FIRST SURFACE DECORATION

THIS SIGN IS INTENDED TO BE INSTALLED IN ACCORDANCE WITH THE REQUIREMENTS OF ARTICLE 600 OF THE NATIONAL ELECTRIC CODE AND/OR OTHER APPLICABLE LOCAL CODES. THIS INCLUDES PROPER GROUNDING AND BONDING OF THE SIGN

GENERAL NOTES

1.TOLERANCE (UNLESS NOTED)
- GRAPHICS +/-1/8" • FACE SIZE + 1/16"-¼"
- CABINET +/- 1/8" • VINYL OVERLAP + 1/8"+/ 1/16"
- ALL COPY LEVEL UNLESS NOTED OTHERWISE

2. VIEWING DISTANCE 25' TO 50' UNLESS NOTED OTHERWISE
3. PMS COLOR CALLOUT INDICATES USE OF SPRAYLAT MIX SYSTEM
4. NO DEVIATION OR MATERIAL SUBSTITUTION WITHOUT ECN.
5. ALL ELECTRICAL SIGNS TO COMPLY WITH UL 48

DESCRIPTION

RITEAID
2' X 11' NL SF
ANCILLARY SIGN CABINET

VOLTAGE: CIRCUIT: CURRENT: DESIGN LOAD:

DRAWN BY: BRIAN S. CHECKED BY:

CLIENT: RITEAID

LOCATION:

QUOTE: DATE:

DRAWING/PART # RAZ0011 REV. A SHEET # 10 OF 19

This document reflects trade secrets and confidential business information, and may not be copied, published, or disseminated in any manner without the prior express written approval of SignResource. All rights reserved, including patent, trademark and copyrights.

NON-ILLUMINATED

REQUIRED INFO: METHOD OF SERVICE IS A HINGED FACE

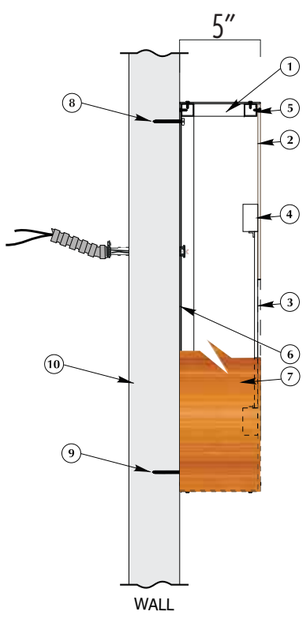

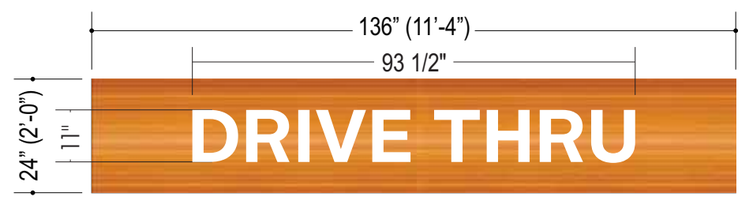

FRONT VIEW

1. 1"x 1"x .125 Aluminum tube frame
2. Hinged Face: Routed ACM by Reynobond - Scottish Oakwood Grain
3. .150 White polycarbonate backer
4. 1"x 2" Alum Tube w/ ¾" x ¾" Alum angle
5. Pop rivet attachment
6. .080 aluminum backs
7. Sides: ACM by Reynobond - Scottish Oakwood Grain
8. Masonry fasteners used in top section of cabinets
9. Lagbolts used in bottom section of cabinets
10. Building facade.

Detail of Sign Cabinet

N.T.S.

5

SCALE 1:32
22.67 SF

APPROVAL SIGNATURE _____ **DATE** _____

By signing, you are validating the dimensions and graphic provided to SignResource and/or you are handling your own installation.

Please Note: Weights and Measures requirements vary by State, County and Municipality. It is the responsibility of the customer to confirm that these graphics are compliant with all local Regulations, Statues and Ordinances. Compliancy must be confirmed by the party obtaining the permit. SignResource is not liable for misinterpretation of local Weights and Measures requirements or any rule changes that may occur after the order has been placed. If permitting and installation is provided by SignResource, we will make every effort to confirm the signage provided is compliant at the time of installation.

SignResource IDENTITY GROUP
6135 District Blvd • Maywood, CA 90270
800.423.4283 • Fax 323.560.7143
Website: www.signresource.com

REVISION HISTORY:

REV	DATE	REQUESTED BY	UPDATED BY
A	05/16/16	TL	BS

REVISION DESCRIPTION: INITIAL DRAWING

PARTS LIST:

ITEM	DECORATION
A	SCOTTISH OAKWOOD GRAIN
B	WHITE
C	
D	
E	
F	

	MATERIAL LIST
1	.125 ALUMINUM TUBE FRAME (1"x 1")
2	.150 WHITE PLASTIC
3	ROUTED ACM BY RENOBOND
4	LED ILLUMINATION
5	

FIRST SURFACE DECORATION

THIS SIGN IS INTENDED TO BE INSTALLED IN ACCORDANCE WITH THE REQUIREMENTS OF ARTICLE 600 OF THE NATIONAL ELECTRIC CODE AND/OR OTHER APPLICABLE LOCAL CODES. THIS INCLUDES PROPER GROUNDING AND BONDING OF THE SIGN

GENERAL NOTES

1. TOLERANCE (UNLESS NOTED)
   - GRAPHICS +/-1/8" • FACE SIZE + 1/16"-¼"
   - CABINET +/- 1/8" • VINYL OVERLAP + 1/8"+/ 1/16"
   - ALL COPY LEVEL UNLESS NOTED OTHERWISE
2. VIEWING DISTANCE 25' TO 50' UNLESS NOTED OTHERWISE
3. PMS COLOR CALLOUT INDICATES USE OF SPRAYLAT MIX SYSTEM
4. NO DEVIATION OR MATERIAL SUBSTITUTION WITHOUT ECN.
5. ALL ELECTRICAL SIGNS TO COMPLY WITH UL 48

DESCRIPTION
RITEAID
2' X 11' NL SF
ANCILLARY SIGN CABINET

VOLTAGE: CIRCUIT: CURRENT: DESIGN LOAD:

DRAWN BY: BRIAN S. CHECKED BY:

CLIENT: RITEAID

LOCATION:

QUOTE: DATE:

DRAWING/PART # RAZ0012 REV. A SHEET # 11 OF 19

This document reflects trade secrets and confidential business information, and may not be copied, published, or disseminated in any manner without the prior express written approval of SignResource. All rights reserved, including patent, trademark and copyrights.

PYLON IS TO BE SHIPPED OUT AS 1 PIECE

METHOD OF SERVICE IS TBD BY ENGINEERING

LED ILLUMINATION

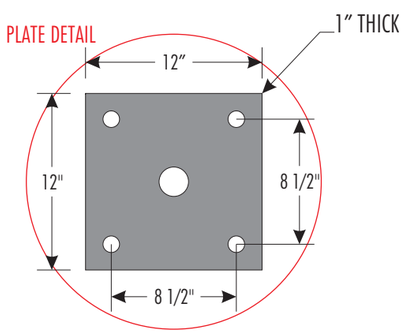

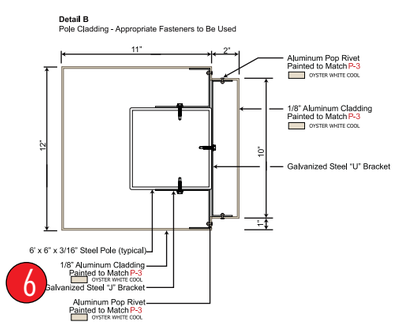

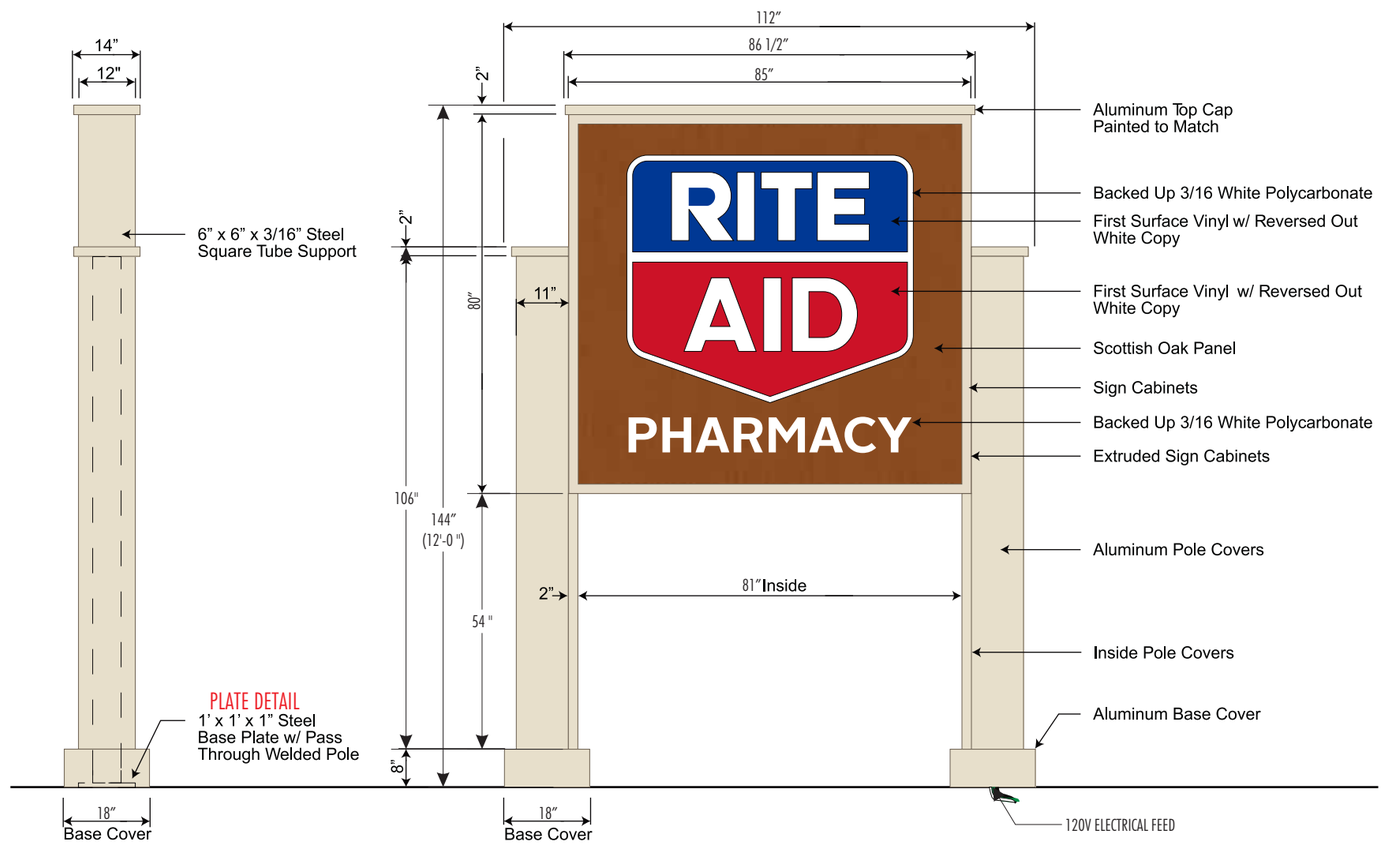

Please Note: Weights and Measures requirements vary by State, County and Municipality. It is the responsibility of the customer to confirm that these graphics are compliant with all local Regulations, Statues and Ordinances. Compliancy must be confirmed by the party obtaining the permit. SignResource is not liable for misinterpretation of local Weights and Measures requirements or any rule changes that may occur after the order has been placed. If permitting and installation is provided by SignResource, we will make every effort to confirm the signage provided is compliant at the time of installation.

APPROVAL SIGNATURE

By signing, you are validating the dimensions and graphic provided to SignResource and/or you are handling your own installation.

SignResource IDENTITY GROUP
6135 District Blvd • Maywood, CA 90270
800.423.4283 • Fax 323.560.7143
Website: www.signresource.com

REVISION HISTORY:

REV	DATE	REQUESTED BY	UPDATED BY
A	12/10/15	TL	BS

REVISION DESCRIPTION: INITIAL DRAWING

PARTS LIST:

ITEM	DECORATION
A	PAINT TO MATCH "OYSTER WHITE COOL"
B	ARLON 2500-2870 BLUE
C	ARLON 2500-2283 RED
D	WHITE
E	SCOTTISH OAK PANEL
F	DRIFTWOOD MICA COOL 20 PANEL

	MATERIAL LIST
1	ALUMINUM
2	POLES
3	LED ILLUMINATION
4	
5	

THIS SIGN IS INTENDED TO BE INSTALLED IN ACCORDANCE WITH THE REQUIREMENTS OF ARTICLE 600 OF THE NATIONAL ELECTRIC CODE AND/OR OTHER APPLICABLE LOCAL CODES. THIS INCLUDES PROPER GROUNDING AND BONDING OF THE SIGN

GENERAL NOTES

1. TOLERANCE (UNLESS NOTED)
   - GRAPHICS +/-1/8" • FACE SIZE + 1/16"-¼"
   - CABINET +/- 1/8" • VINYL OVERLAP + 1/8"+/ 1/16"
   - ALL COPY LEVEL UNLESS NOTED OTHERWISE
2. VIEWING DISTANCE 25' TO 50' UNLESS NOTED OTHERWISE
3. PMS COLOR CALLOUT INDICATES USE OF SPRAYLAT MIX SYSTEM
4. NO DEVIATION OR MATERIAL SUBSTITUTION WITHOUT ECN.
5. ALL ELECTRICAL SIGNS TO COMPLY WITH UL 48

DESCRIPTION

RITE AID 12'-0"
DF LED IL BTP PYLON SIGN

DRAWN BY: BRIAN S.
CHECKED BY:
CLIENT: ENTERPRISE HOLDINGS
LOCATION: MULTIPLE LOCATIONS
QUOTE:
DATE: 12/10/15
DRAWING/PART #: RAP12-LED
REV.: A
SHEET #: 12 OF 19

This document reflects trade secrets and confidential business information, and may not be copied, published, or disseminated in any manner without the prior express written approval of SignResource. All rights reserved, including patent, trademark and copyrights.

COVERS MUST BE OPAQUE.

7

32 SF

APPROVAL SIGNATURE _____ DATE _____

By signing, you are validating the dimensions and graphic provided to SignResource and/or you are handling your own installation.

Please Note: Weights and Measures requirements vary by State, County and Municipality. It is the responsibility of the customer to confirm that these graphics are compliant with all local Regulations, Statues and Ordinances. Compliancy must be confirmed by the party obtaining the permit. SignResource is not liable for misinterpretation of local Weights and Measures requirements or any rule changes that may occur after the order has been placed. If permitting and installation is provided by SignResource, we will make every effort to confirm the signage provided is compliant at the time of installation.

SignResource IDENTITY GROUP
6135 District Blvd • Maywood, CA 90270
800.423.4283 • Fax 323.560.7143
Website: www.signresource.com

REVISION HISTORY:

REV	DATE	REQUESTED BY	UPDATED BY
A	08/11/15	AH	BS

REVISION DESCRIPTION: INITIAL DRAWING

PARTS LIST:

ITEM	DECORATION
A	WHITE (OPAQUE)
B	MATCH Sw6076 TURKISH COFFEE
C	ARLON 2500-2870 BLUE
D	ARLON 2500-2283 RED
E	
F	

	MATERIAL LIST
1	PANAGRAPHICS III
2	
3	
4	
5	

THIS SIGN IS INTENDED TO BE INSTALLED IN ACCORDANCE WITH THE REQUIREMENTS OF ARTICLE 600 OF THE NATIONAL ELECTRIC CODE AND/OR OTHER APPLICABLE LOCAL CODES. THIS INCLUDES PROPER GROUNDING AND BONDING OF THE SIGN

GENERAL NOTES

1.TOLERANCE (UNLESS NOTED)
- GRAPHICS +/-1/8" • FACE SIZE + 1/16"-¼"
- CABINET +/- 1/8" • VINYL OVERLAP + 1/8"+/ 1/16"
- ALL COPY LEVEL UNLESS NOTED OTHERWISE

2. VIEWING DISTANCE 25' TO 50' UNLESS NOTED OTHERWISE
3. PMS COLOR CALLOUT INDICATES USE OF SPRAYLAT MIX SYSTEM
4. NO DEVIATION OR MATERIAL SUBSTITUTION WITHOUT ECN.
5. ALL ELECTRICAL SIGNS TO COMPLY WITH UL 48

DESCRIPTION
RITEAID
4' x 8' TEMPORARY SF NL
BANNER COVER W/GROMMETS

VOLTAGE: CIRCUIT: CURRENT: DESIGN LOAD:

DRAWN BY: BRIAN S. CHECKED BY:

CLIENT: RITEAID

LOCATION:

QUOTE: DATE: 08/11/15

DRAWING/PART # RA0408CVR01 REV. A SHEET # 13 OF 19

This document reflects trade secrets and confidential business information, and may not be copied, published, or disseminated in any manner without the prior express written approval of SignResource. All rights reserved, including patent, trademark and copyrights.

NON-ILLUMINATED

REQUIRED INFO: METHOD OF SERVICE IS REMOVAL OF FACE

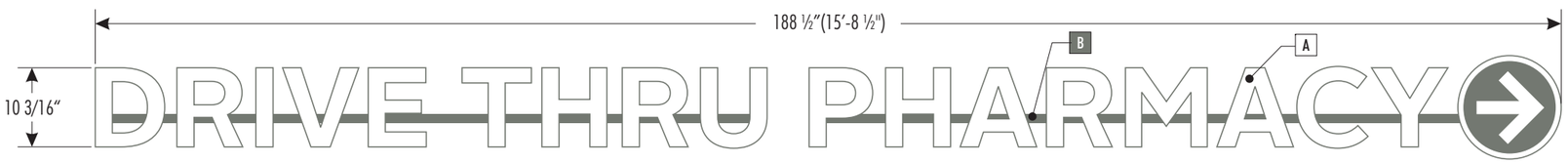

FRONT VIEW

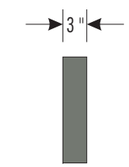

SIDE VIEW

LETTERS	MATERIAL LIST
1	5" X .040 aluminum letter coil painted pms 424 letter locked to aluminum letter backs
2	1" Trim cap painted pms 424
3	.125 #2447 White plex faces
4	Building facade.
5	Sheathing by others
6	Pre-drilled electrical hole w/ plastic grommet.
7	1" x 2" x 1/8" Aluminum Raceway
8	Masonry fasteners (Min. 3 per raceway)
9	.063 pre-finished black/white aluminum backs (white to inside)
10	1/4" Weep holes at low points of letters
11	
12	
13	
14	
15	
16	

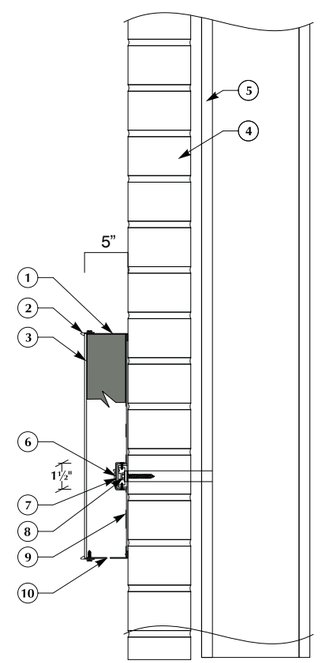

Access to rear of facade to be by others.
Note: All penetrations to be sealed with BIOSTOP 500+Intumescent Firestop Sealant to meet NEC #300.21, ASTM #E814, UL #1479 and UL #2079 standards.

PART #: RA0210CVR

TEMPORARY WHITE BANNER COVERS

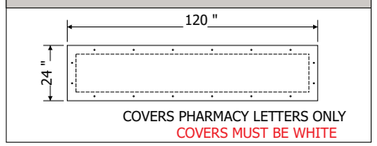

8

APPROVAL SIGNATURE _____ **DATE** _____

By signing, you are validating the dimensions and graphic provided to SignResource and/or you are handling your own installation.

Please Note: Weights and Measures requirements vary by State, County and Municipality. It is the responsibility of the customer to confirm that these graphics are compliant with all local Regulations, Statues and Ordinances. Compliancy must be confirmed by the party obtaining the permit. SignResource is not liable for misinterpretation of local Weights and Measures requirements or any rule changes that may occur after the order has been placed. If permitting and installation is provided by SignResource, we will make every effort to confirm the signage provided is compliant at the time of installation.

SignResource IDENTITY GROUP
6135 District Blvd • Maywood, CA 90270
800.423.4283 • Fax 323.560.7143
Website: www.signresource.com

REVISION HISTORY:

REV	DATE	REQUESTED BY	UPDATED BY
A	05/16/16	TL	BS

REVISION DESCRIPTION: INITIAL DRAWING

PARTS LIST:

ITEM	DECORATION
A	WHITE
B	PAINT TO MATCH PMS 424
C	
D	
E	
F	
	MATERIAL LIST
1	5" ALUMINUM RETURNS
2	1/8" WHITE PLASTIC FACE
3	
4	
5	

FIRST SURFACE DECORATION

THIS SIGN IS INTENDED TO BE INSTALLED IN ACCORDANCE WITH THE REQUIREMENTS OF ARTICLE 600 OF THE NATIONAL ELECTRIC CODE AND/OR OTHER APPLICABLE LOCAL CODES. THIS INCLUDES PROPER GROUNDING AND BONDING OF THE SIGN

GENERAL NOTES

1.TOLERANCE (UNLESS NOTED)
- GRAPHICS +/-1/8" • FACE SIZE + 1/16"-¼"
- CABINET +/- 1/8" • VINYL OVERLAP + 1/8"+/ 1/16"
- ALL COPY LEVEL UNLESS NOTED OTHERWISE

2. VIEWING DISTANCE 25' TO 50' UNLESS NOTED OTHERWISE
3. PMS COLOR CALLOUT INDICATES USE OF SPRAYLAT MIX SYSTEM
4. NO DEVIATION OR MATERIAL SUBSTITUTION WITHOUT ECN.
5. ALL ELECTRICAL SIGNS TO COMPLY WITH UL 48

DESCRIPTION

RITEAID
10 3/16" X 188 ½" SF NL
CHANNEL LETTERS WITH ARROW

VOLTAGE: CIRCUIT: CURRENT: DESIGN LOAD:

DRAWN BY: BRIAN S. CHECKED BY:

CLIENT: RITEAID

LOCATION:

QUOTE: DATE:

DRAWING/PART #: RAV0032 REV. A SHEET # 14 OF 19

This document reflects trade secrets and confidential business information, and may not be copied, published, or disseminated in any manner without the prior express written approval of SignResource. All rights reserved, including patent, trademark and copyrights.

9

SCALE: 1 ½" = 1'-0"

APPROVAL SIGNATURE _____ **DATE** _____

By signing, you are validating the dimensions and graphic provided to SignResource and/or you are handling your own installation.

Please Note: Weights and Measures requirements vary by State, County and Municipality. It is the responsibility of the customer to confirm that these graphics are compliant with all local Regulations, Statues and Ordinances. Compliancy must be confirmed by the party obtaining the permit. SignResource is not liable for misinterpretation of local Weights and Measures requirements or any rule changes that may occur after the order has been placed. If permitting and installation is provided by SignResource, we will make every effort to confirm the signage provided is compliant at the time of installation.

SignResource IDENTITY GROUP
6135 District Blvd • Maywood, CA 90270
800.423.4283 • Fax 323.560.7143
Website: www.signresource.com

REVISION HISTORY:

REV	DATE	REQUESTED BY	UPDATED BY
A	04/07/15	AH	CM

REVISION DESCRIPTION: INITIAL DRAWING

PARTS LIST:

ITEM	DECORATION
A	VINYL 3M 3630-59 DARK BROWN
B	
C	
D	
E	
F	
	MATERIAL LIST
1	CLEAR PLASTIC PANEL
2	VINYL COPY
3	
4	
5	

QTY: 1

FIRST SURFACE DECORATION

SCALE ½" : 1'-0"

THIS SIGN IS INTENDED TO BE INSTALLED IN ACCORDANCE WITH THE REQUIREMENTS OF ARTICLE 600 OF THE NATIONAL ELECTRIC CODE AND/OR OTHER APPLICABLE LOCAL CODES. THIS INCLUDES PROPER GROUNDING AND BONDING OF THE SIGN

GENERAL NOTES

1.TOLERANCE (UNLESS NOTED)
- GRAPHICS +/-1/8" • FACE SIZE + 1/16"-¼"
- CABINET +/- 1/8" • VINYL OVERLAP + 1/8"+/ 1/16"
- ALL COPY LEVEL UNLESS NOTED OTHERWISE

2. VIEWING DISTANCE 25' TO 50' UNLESS NOTED OTHERWISE
3. PMS COLOR CALLOUT INDICATES USE OF SPRAYLAT MIX SYSTEM
4. NO DEVIATION OR MATERIAL SUBSTITUTION WITHOUT ECN.
5. ALL ELECTRICAL SIGNS TO COMPLY WITH UL 48

DESCRIPTION: RITEAID
1' X 5' SF NL
LEXAN PANEL SIGN

VOLTAGE: CIRCUIT: CURRENT: DESIGN LOAD:

DRAWN BY: CORY M. CHECKED BY:

CLIENT: RITEAID

LOCATION: MULTIPLE

QUOTE: 216587 DATE: 04/07/2015

DRAWING/PART #: RA0105LEX REV. A SHEET # 15 OF 19

This document reflects trade secrets and confidential business information, and may not be copied, published, or disseminated in any manner without the prior express written approval of SignResource. All rights reserved, including patent, trademark and copyrights.

NON-ILLUMINATED

REQUIRED INFO: METHOD OF SERVICE IS REMOVAL OF FACE

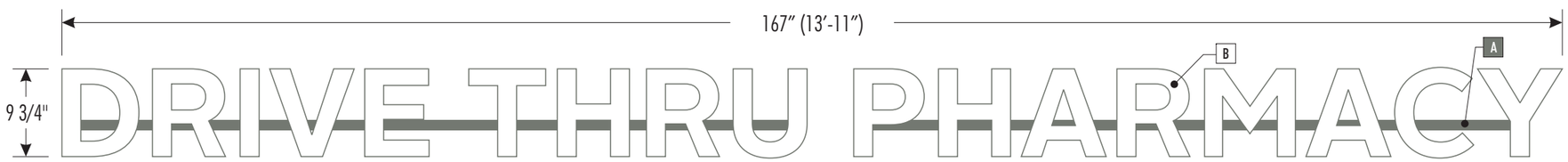

FRONT VIEW

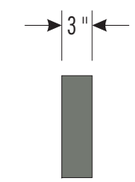

SIDE VIEW

LETTERS	MATERIAL LIST
1	5" X .040 aluminum letter coil painted pms 424 letter locked to aluminum letter backs
2	1" Trim cap painted pms 424
3	.125 #2447 White plex faces
4	Building facade.
5	Sheathing by others
6	Pre-drilled electrical hole w/ plastic grommet.
7	1" x 2" x 1/8" Aluminum Raceway
8	Masonry fasteners (Min. 3 per raceway)
9	.063 pre-finished black/white aluminum backs (white to inside)
10	1/4" Weep holes at low points of letters
11	
12	
13	
14	
15	
16	

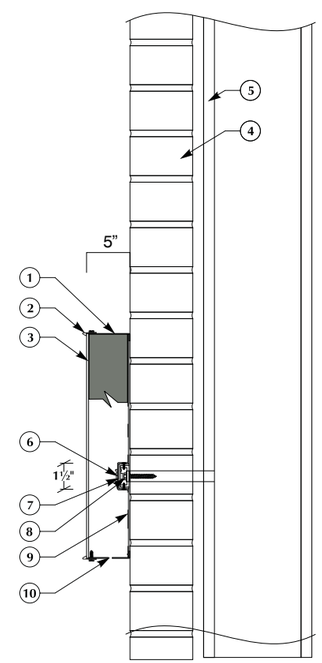

Access to rear of facade to be by others.
Note: All penetrations to be sealed with BIOSTOP 500+Intumescent Firestop Sealant to meet NEC #300.21, ASTM #E814, UL #1479 and UL #2079 standards.

PART #: RA0210CVR

TEMPORARY WHITE BANNER COVERS

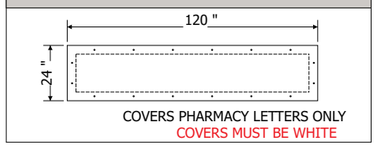

10

APPROVAL SIGNATURE _____ **DATE** _____

By signing, you are validating the dimensions and graphic provided to SignResource and/or you are handling your own installation.

Please Note: Weights and Measures requirements vary by State, County and Municipality. It is the responsibility of the customer to confirm that these graphics are compliant with all local Regulations, Statues and Ordinances. Compliancy must be confirmed by the party obtaining the permit. SignResource is not liable for misinterpretation of local Weights and Measures requirements or any rule changes that may occur after the order has been placed. If permitting and installation is provided by SignResource, we will make every effort to confirm the signage provided is compliant at the time of installation.

SignResource IDENTITY GROUP
6135 District Blvd • Maywood, CA 90270
800.423.4283 • Fax 323.560.7143
Website: www.signresource.com

REVISION HISTORY:

REV	DATE	REQUESTED BY	UPDATED BY
A	05/16/16	TL	BS

REVISION DESCRIPTION: INITIAL DRAWING

PARTS LIST:

ITEM	DECORATION
A	PAINT TO MATCH PMS 424
B	WHITE
C	
D	
E	
F	

	MATERIAL LIST
1	1/8" WHITE PLASTIC FACES
2	5" ALUMINUM RETURNS
3	
4	
5	

FIRST SURFACE DECORATION

THIS SIGN IS INTENDED TO BE INSTALLED IN ACCORDANCE WITH THE REQUIREMENTS OF ARTICLE 600 OF THE NATIONAL ELECTRIC CODE AND/OR OTHER APPLICABLE LOCAL CODES. THIS INCLUDES PROPER GROUNDING AND BONDING OF THE SIGN

GENERAL NOTES

1.TOLERANCE (UNLESS NOTED)
- GRAPHICS +/-1/8" • FACE SIZE + 1/16"-¼"
- CABINET +/- 1/8" • VINYL OVERLAP + 1/8"+/ 1/16"
- ALL COPY LEVEL UNLESS NOTED OTHERWISE

2. VIEWING DISTANCE 25' TO 50' UNLESS NOTED OTHERWISE
3. PMS COLOR CALLOUT INDICATES USE OF SPRAYLAT MIX SYSTEM
4. NO DEVIATION OR MATERIAL SUBSTITUTION WITHOUT ECN.
5. ALL ELECTRICAL SIGNS TO COMPLY WITH UL 48

DESCRIPTION: RITEAID 9 3/4" X 167" SF NL CHANNEL LETTER SET

VOLTAGE: CIRCUIT: CURRENT: DESIGN LOAD:

DRAWN BY: BRIAN S. CHECKED BY:

CLIENT: RITEAID

LOCATION: MULTIPLE

QUOTE: DATE: 05/16/16

DRAWING/PART #: RAV0033 REV. A SHEET # 16 OF 19

This document reflects trade secrets and confidential business information, and may not be copied, published, or disseminated in any manner without the prior express written approval of SignResource. All rights reserved, including patent, trademark and copyrights.

NON-ILLUMINATED DT CANOPY SIGNS	QTY:**1 Each**

11 — 54 " (4′-6″) × 8" — CLEARANCE 10′-0″ — # RA0854APC10 — 3 SQ FT

Scale 3/8″ = 1′ # RA0827APPU # RA0827APDO

12 — 27 " (2′-3″) × 8" — PICK UP — 1.5 SQ FT

13 — 27 " (2′-3″) × 8" — DROP OFF — 1.5 SQ FT

Scale 3/8″ = 1′ # RA0827APEO # RA1818SPEO

14 — 27 " (2′-3″) × 8" — EXIT ONLY — 1.5 SQ FT

15 — 18" × 18" — EXIT ONLY — 2.25 SQ FT

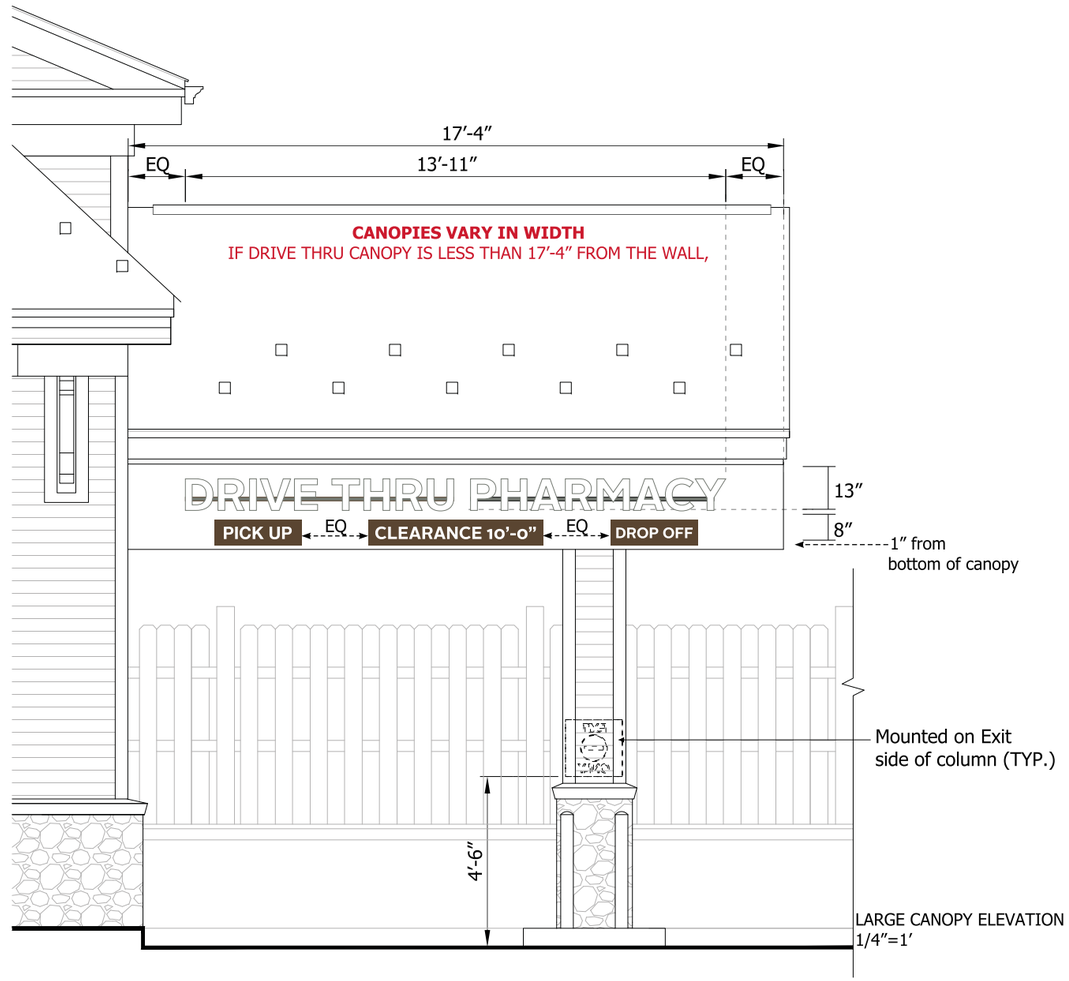

LARGE CANOPY ELEVATION
1/4″=1′

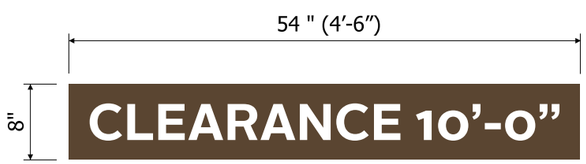

SCALE: 3/4″ = 1′

Panel
.125 Flat Aluminum, paint GripGuard Brown to match BM 2108-20 Sierra Spruce Semi gloss finish P-4

Copy
White Reflective vinyl copy 3M-480-10 V-5

Facade
Aluminum Panels (Typ.)

Mounting
(4) 8x3 Flat Heat Color Matched Galvanized Deck Screws to be used in conjuntions w/ silicone

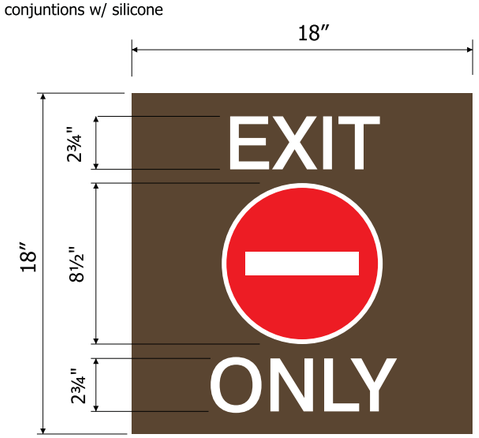

SCALE: 1 ½″ = 1′

SF Traffic Control Sign

Bkgd
.125 Alum. paint GripGuard Brown to match BM 2108-20 Sierra Spruce (front & back) Semi gloss finish P-4

Copy
White Reflective vinyl copy 3M-480-10 V-5

Symbol
Red Reflective vinyl 3M 480-82 w/ White Reflective vinyl detail 3M-480-10 V-5 & V-6

Facade
CMU - Brick (Typ.)

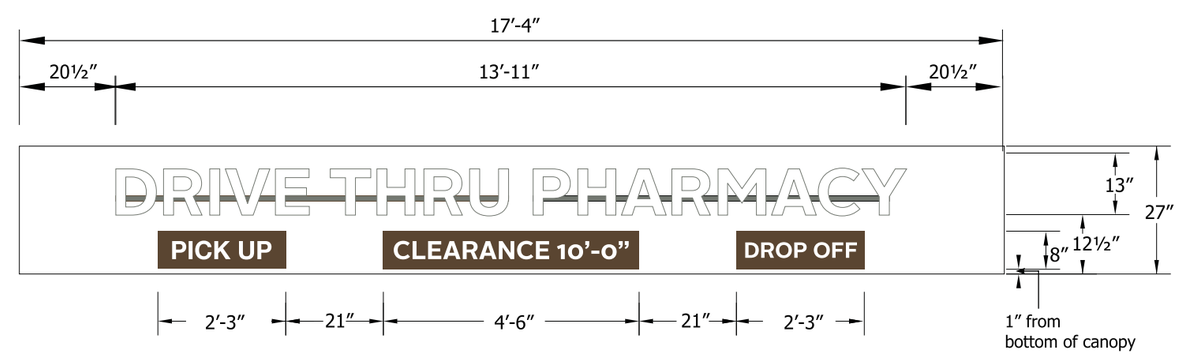

SMALL CANOPY ELEVATION
NTS

CANOPIES VARY IN WIDTH
IF DRIVE THRU CANOPY IS LESS THAN 17′-4″ FROM THE WALL,

COLOR/FINISHES

- P-1 MP 42-202 WHITE
- P-2 RUSTOLEUM 9109 WHITE PRIMER
- P-3 TO MATCH BM 996 ASHEN TAN
- P-4 TO MATCH BM 2108-20 SIERRA SPRUCE
- V-1 ARLON 2500-2870 BLUE
- V-2 ARLON 2500-2283 RED
- V-3 CALON 102 WHITE LOW TAC OPAQUE
- V-4 VINYL 3M-3630-59 DARK BROWN
- V-5 VINYL 3M-480-10 SCOTCHLITE REFLECTIVE WHITE
- V-6 VINYL 3M-480-82 SCOTCHLITE REFLECTIVE RED
- V-7 VINYL TO MATCH BM 0C-41 FRENCH CANVAS

D/F DIRECTIONAL SIGN
NON-ILLUMINATED 4 SQ FT

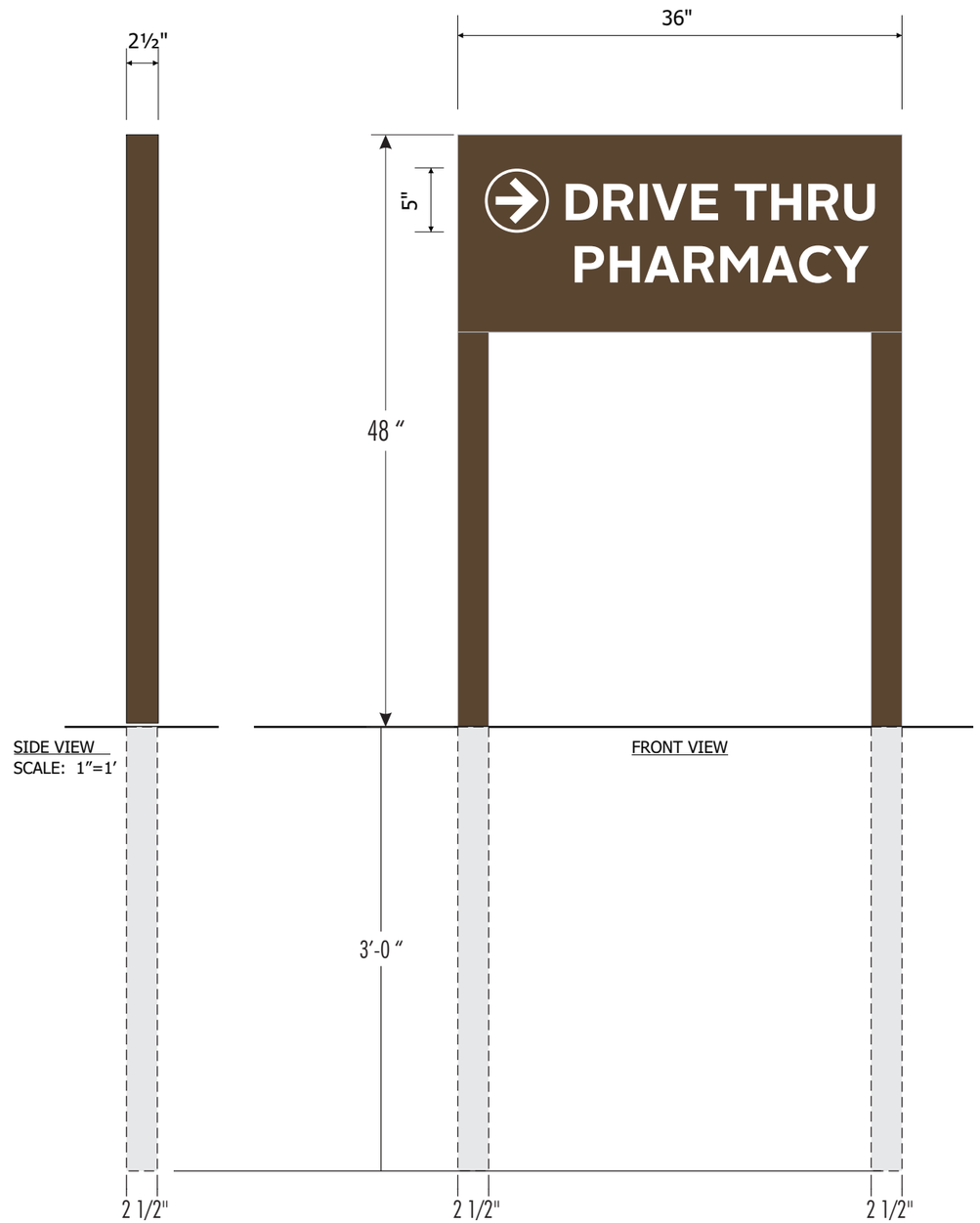

BACK VIEW
SCALE: 1"=1'

Panels
.080 flat aluminum panels
PAINTED Sw6076 TURKISH COFFEE

Copy
White Reflective vinyl copy
WHITE REFLECTIVE VINYL 3M480-10

Posts
PAINTED Sw6076 TURKISH COFFEE

TEMPORARY VINYL COVERS

NO COPY

QTY: **As Needed**

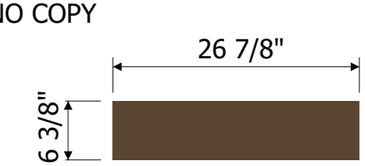

VINYL TO MATCH SW6076 TURKISH COFFEE
LOW TAC OPAQUE VINYL

SCALE 1:12
4 SF

16

APPROVAL SIGNATURE **DATE**

By signing, you are validating the dimensions and graphic provided to SignResource and/or you are handling your own installation.

Please Note: Weights and Measures requirements vary by State, County and Municipality. It is the responsibility of the customer to confirm that these graphics are compliant with all local Regulations, Statues and Ordinances. Compliancy must be confirmed by the party obtaining the permit. SignResource is not liable for misinterpretation of local Weights and Measures requirements or any rule changes that may occur after the order has been placed. If permitting and installation is provided by SignResource, we will make every effort to confirm the signage provided is compliant at the time of installation.

SignResource IDENTITY GROUP
6135 District Blvd • Maywood, CA 90270
800.423.4283 • Fax 323.560.7143
Website: www.signresource.com

REVISION HISTORY:

REV	DATE	REQUESTED BY	UPDATED BY
A	05/10/16	TL	BS

REVISION DESCRIPTION: INITIAL DRAWING

PARTS LIST:

ITEM	DECORATION
A	VINYL (TO MATCH "SW6076 TURKISH COFFEE")
B	WHITE REFLECTIVE VINYL 3M480-10
C	
D	
E	
F	

	MATERIAL LIST
1	.080" ALUMINUM PANEL
2	LOW-TAC OPAQUE VINYL
3	
4	
5	

THIS SIGN IS INTENDED TO BE INSTALLED IN ACCORDANCE WITH THE REQUIREMENTS OF ARTICLE 600 OF THE NATIONAL ELECTRIC CODE AND/OR OTHER APPLICABLE LOCAL CODES. THIS INCLUDES PROPER GROUNDING AND BONDING OF THE SIGN

GENERAL NOTES

1.TOLERANCE (UNLESS NOTED)
- GRAPHICS +/-1/8" • FACE SIZE + 1/16"-¼"
- CABINET +/- 1/8" • VINYL OVERLAP + 1/8"+/ 1/16"
- ALL COPY LEVEL UNLESS NOTED OTHERWISE

2. VIEWING DISTANCE 25' TO 50' UNLESS NOTED OTHERWISE
3. PMS COLOR CALLOUT INDICATES USE OF SPRAYLAT MIX SYSTEM
4. NO DEVIATION OR MATERIAL SUBSTITUTION WITHOUT ECN.
5. ALL ELECTRICAL SIGNS TO COMPLY WITH UL 48

DESCRIPTION
RITEAID
16" x 36"DF NL
DIRECTIONAL SIGNS

VOLTAGE: CIRCUIT: CURRENT: DESIGN LOAD:

DRAWN BY: BRIAN S. CHECKED BY:

CLIENT: RITEAID

LOCATION:

QUOTE: DATE: 05/10/16

DRAWING/PART # RAV0035 REV. A SHEET # 18 OF 19

This document reflects trade secrets and confidential business information, and may not be copied, published, or disseminated in any manner without the prior express written approval of SignResource. All rights reserved, including patent, trademark and copyrights.

D/F DIRECTIONAL SIGN
NON-ILLUMINATED — 4 SQ FT

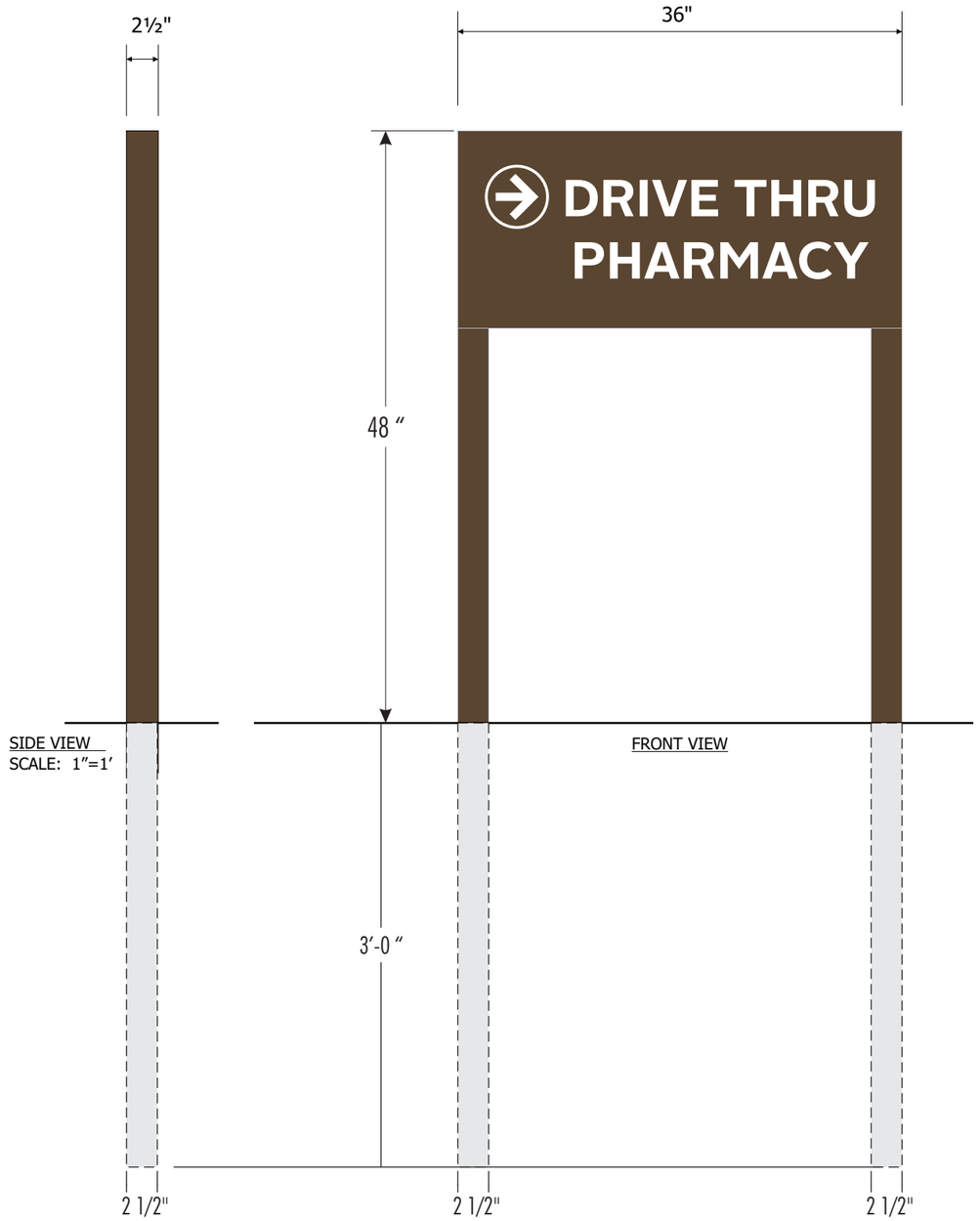

BACK VIEW
SCALE: 1"=1'

Panels
.080 flat aluminum panels
PAINTED Sw6076 TURKISH COFFEE

Copy
White Reflective vinyl copy
WHITE REFLECTIVE VINYL 3M480-10

Posts
PAINTED Sw6076 TURKISH COFFEE

TEMPORARY VINYL COVERS

NO COPY — QTY: **As Needed**

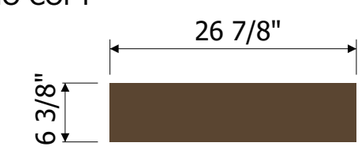

VINYL TO MATCH SW6076 TURKISH COFFEE
LOW TAC OPAQUE VINYL

SCALE 1:12
4 SF

17

APPROVAL SIGNATURE _____ **DATE** _____

By signing, you are validating the dimensions and graphic provided to SignResource and/or you are handling your own installation.

Please Note: Weights and Measures requirements vary by State, County and Municipality. It is the responsibility of the customer to confirm that these graphics are compliant with all local Regulations, Statues and Ordinances. Compliancy must be confirmed by the party obtaining the permit. SignResource is not liable for misinterpretation of local Weights and Measures requirements or any rule changes that may occur after the order has been placed. If permitting and installation is provided by SignResource, we will make every effort to confirm the signage provided is compliant at the time of installation.

SignResource IDENTITY GROUP
6135 District Blvd • Maywood, CA 90270
800.423.4283 • Fax 323.560.7143
Website: www.signresource.com

REVISION HISTORY:

REV	DATE	REQUESTED BY	UPDATED BY
A	05/10/16	TL	BS

REVISION DESCRIPTION: INITIAL DRAWING

PARTS LIST:

ITEM	DECORATION
A	VINYL (TO MATCH "SW6076 TURKISH COFFEE")
B	WHITE REFLECTIVE VINYL 3M480-10
C	
D	
E	
F	

	MATERIAL LIST
1	.080" ALUMINUM PANEL
2	LOW-TAC OPAQUE VINYL
3	
4	
5	

THIS SIGN IS INTENDED TO BE INSTALLED IN ACCORDANCE WITH THE REQUIREMENTS OF ARTICLE 600 OF THE NATIONAL ELECTRIC CODE AND/OR OTHER APPLICABLE LOCAL CODES. THIS INCLUDES PROPER GROUNDING AND BONDING OF THE SIGN

GENERAL NOTES

1. TOLERANCE (UNLESS NOTED)
   - GRAPHICS +/-1/8" • FACE SIZE + 1/16"-¼"
   - CABINET +/- 1/8" • VINYL OVERLAP + 1/8"+/ 1/16"
   - ALL COPY LEVEL UNLESS NOTED OTHERWISE
2. VIEWING DISTANCE 25' TO 50' UNLESS NOTED OTHERWISE
3. PMS COLOR CALLOUT INDICATES USE OF SPRAYLAT MIX SYSTEM
4. NO DEVIATION OR MATERIAL SUBSTITUTION WITHOUT ECN.
5. ALL ELECTRICAL SIGNS TO COMPLY WITH UL 48

DESCRIPTION: RITEAID 16" x 36"DF NL DIRECTIONAL SIGNS

VOLTAGE: CIRCUIT: CURRENT: DESIGN LOAD:

DRAWN BY: BRIAN S. CHECKED BY:

CLIENT: RITEAID

LOCATION:

QUOTE: DATE: 05/10/16

DRAWING/PART #: RAV0034 REV. A SHEET # 19 OF 19

This document reflects trade secrets and confidential business information, and may not be copied, published, or disseminated in any manner without the prior express written approval of SignResource. All rights reserved, including patent, trademark and copyrights.